United States Circuit Court of Appeals

FOR THE SIXTH CIRCUIT.

No. 964.

GENERAL EXCAVATOR COMPANY,
Appellant,

vs.

KEYSTONE DRILLER COMPANY,
Appellee,

KEYSTONE DRILLER COMPANY,
Cross-Appellant,

vs.

GENERAL EXCAVATOR COMPANY,
Cross-Appellee.

No. 965.

THE OSGOOD COMPANY,
Appellant,

vs.

KEYSTONE DRILLER COMPANY,
Appellee.

KEYSTONE DRILLER COMPANY,
Cross-Appellant,

vs.

THE OSGOOD COMPANY,
Cross-Appellee.

APPEALS FROM THE UNITED STATES DISTRICT COURT,
FOR THE NORTHERN DISTRICT OF OHIO,
WESTERN DIVISION.

TRANSCRIPT OF RECORD
VOLUME I
TRIAL PLEADINGS AND TESTIMONY

NAMES AND ADDRESSES OF COUNSEL
(Inside Front Cover)

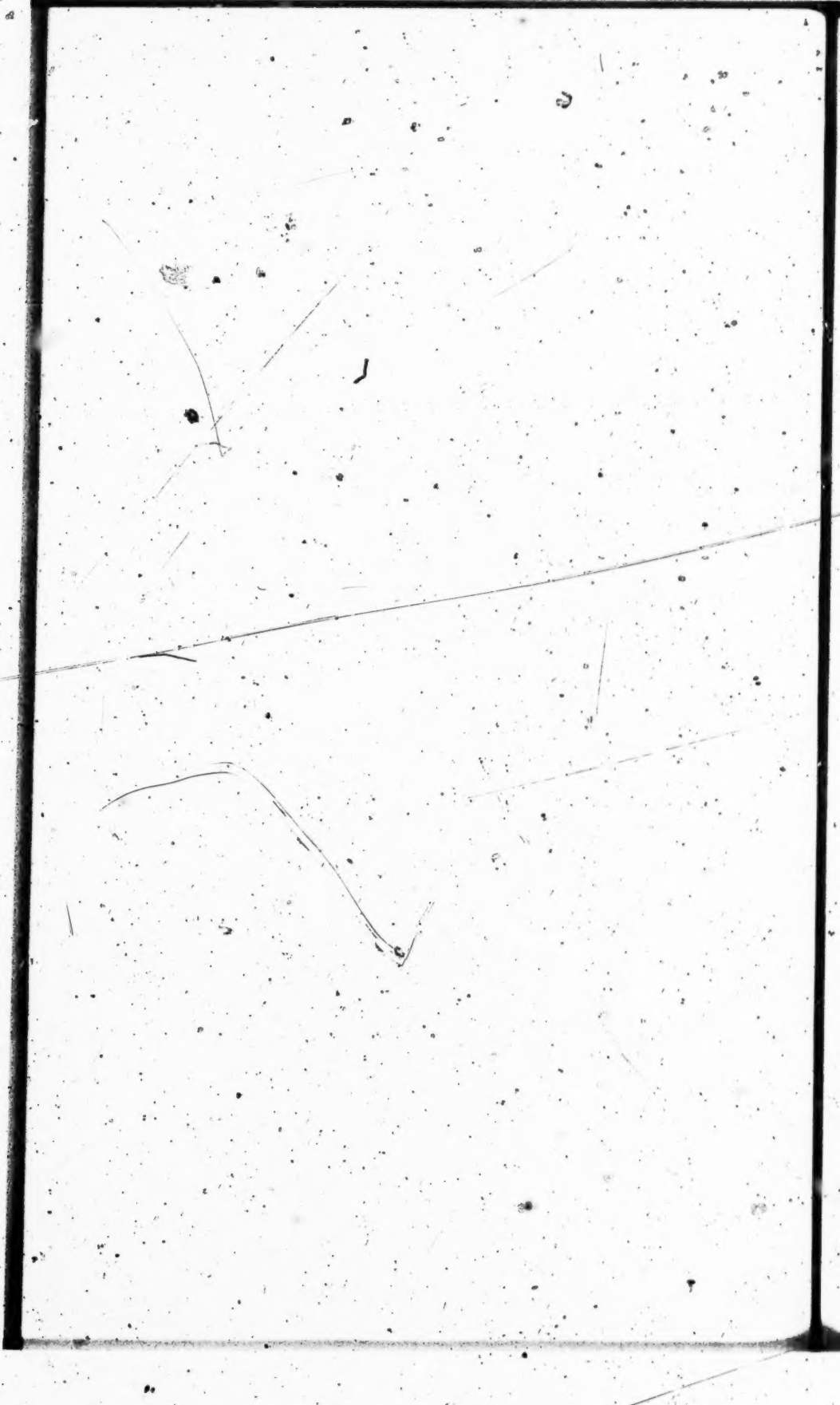

INDEX

VOLUME I

Cases Nos. 964 and 965

Caption 1

TRIAL PAPERS

In Case No. 964

Order of Consolidation (Sept. 15, 1931) 2

Bill of Complaint (Feb. 9, 1929) 3

Patents in Suit [See Pages 91, 97 and 109 of Exhibits, Vol. III] 10

Final Decree (Keystone vs. Byers) 10

Opinion of Judge Jones (Keystone vs. Byers) 14

Plaintiff's Interrogatories (Feb. 9, 1929) 16

Exhibit 1. General Excavator Bulletin No. 2703 [See Page 1 of Exhibits, Vol. III] 18

Exhibit 2. General Excavator Bulletin No. 2805 [See Page 13 of Exhibits, Vol. III] 18

Exhibit 3. Letter, March 29, 1928, General Excavator Co. to Frank L. Sessions 18

Affidavit of Robert Rex Downie (Feb. 9, 1929) 19

Affidavit of Philip E. Siggers (Feb. 9, 1929) 22

Exhibit 4. Letter, April 11, 1928, Philip E. Siggers to General Excavator Co. 23

Exhibit 5. Letter, Jan. 24, 1929, Siggers & Adams to General Excavator Co. 24

Exhibit 6. Letter, Jan. 31, 1929, F. O. Richey to General Excavator Co. 25

Exhibits 7 to 22. Photographs [See Pages 37, 39, 41 and 43 of Exhibits, Vol. III] 25

Motion for Preliminary Injunction (Feb. 9, 1929) 26

Order to Show Cause (Feb. 9, 1929) 27

Order Modifying the Dates in the Order to Show Cause (Feb. 18, 1929) 28

Order Extending Time for Serving Copies of Order (Feb. 21, 1929) 28

Defendant's Answers to Plaintiff's Interrogatories (Feb. 25, 1929) 29

Stipulation Extending Time to Answer (Feb. 28, 1929) 30

Order Modifying Dates in Order to Show Cause (Mar. 9, 1929) 31

Stipulation Extending Time for Filing Papers (Mar. 28, 1929) 32

Order Modifying Dates in Order to Show Cause (Mar. 28, 1929) 32

Defendant's Answer (Mar. 29, 1929) 33

Stipulation re Use of Uncertified Copies of Patents, etc., at Trial (Apr. 15, 1929) 40

Memorandum Opinion of Court Upon Motion for Preliminary Injunction (Apr. 25, 1929) 41

Order Denying Motion for Preliminary Injunction (Jun. 12, 1929) 42

Bond of Defendant for $15,000 in Lieu of Preliminary Injunction (Jun. 12, 1929) 42

Stipulation in re Time for Taking Depositions (Jun. 13, 1929) 44

Supplemental Bill of Complaint (Aug. 9, 1929) 44

Downie Patents Nos. 1,709,466 and 1,716,432 [See Pages 119 and 129 of Exhibits, Vol. III] 50

Order Granting Leave to File Supplemental Bill of Complaint (Aug. 23, 1929) 50

Order Allowing Defendant Extension of Time to Answer Supplemental Bill of Complaint (Sep. 9, 1929) 51

Order Permitting The General Excavator Co. and The Osgood Co. to take Depositions (Sep. 9, 1929) 51

Stipulation re Depositions (Sep. 30, 1929) 52

Answer to Supplemental Bill of Complaint (Oct. 10, 1929) .. 53

Plaintiff's Interrogatories (Oct. 21, 1929) 58

Defendant's Objections to Plaintiff's Interrogatories (Oct. 31, 1929) 60

Stipulation re Interrogatories and Depositions (Oct 31, 1929) 61

Stipulation and Order Extending Time of Defendant to Take Depositions (Oct. 31, 1929) 62
Stipulation re Depositions (Dec. 4, 1929) 63
Stipulation re Depositions (Jan. 3, 1929) 63
Stipulation re Depositions (Feb. 4, 1930) 64
Motion and Order Extending Time for Taking Depositions (Feb. 21, 1930) 64
Stipulation re Depositions (Feb. 27, 1930) 65
Motion and Order Extending Time for Taking Depositions (Mar. 18, 1930) 65
Affidavit of Edward L. Reed in Support of Motion (Mar. 18, 1930) 66
Stipulation re Depositions (Apr. 1, 1930) 67
Stipulation re Depositions (Apr. 29, 1930) 67
Order Allowing Substitution of Bond (May 17, 1930) 68
Bond in Lieu of Preliminary Injunction (May 17, 1930) 69
Stipulation re Depositions (Jun. 3, 1930) 70
Stipulation and Order in re Depositions (June 26, 1930) 70
Stipulation re Depositions (Jul. 29, 1930) 71
Stipulation re Depositions (Sep. 5, 1930) 71
Stipulation re Depositions (Sept. 23, 1930) 72
Order Extending Defendant's Time for Taking Depositions (Sept. 29, 1930) 72
Order Extending Defendant's Time for Taking Depositions (Oct. 29, 1930) 73
Order Extending Defendant's Time for Taking Depositions (Nov. 26, 1930) 73
Motion to Compel Production and Inspection of Documents (Dec. 20, 1930) 74
Exhibit A. Affidavit of Edward L. Reed 76
Offer by Plaintiff to Produce Letters, Documents, etc. (Dec. 31, 1930) 79
Affidavit of F. O. Richey and A. H. Edgerton (Dec. 31, 1930) 80

Affidavit of Robert Rex Downie (Dec. 31, 1930) [See Defendant's Exhibit No. 129, Page 1324 of Exhibits, Vol. IV] .. 82

Order Dismissing Defendant's Motion to Compel Production and Inspection of Documents (Feb. 2, 1931) 82

Stipulation in re Title to Certain Patents (Feb. 11, 1931) 83

Stipulation and Order Allowing Use of Uncertified Printed Copies of Patents in Suit (Feb. 16, 1931) 85

Order Allowing Amendment to Defendant's Answer to Supplemental Bill of Complaint (Feb. 16, 1931) 85

Amendment to Answer to Supplemental Bill of Complaint (Feb. 16, 1931) 86

Order Allowing Amendment to Defendant's Answer to Original Bill of Complaint (Feb. 16, 1931) 88

Amendment to Answer to Original Bill of Complaint (Feb. 16, 1931) 88

Order Consolidating Cause No. 964 with Cause No. 965 for the Purpose of Trial (Mar. 3, 1931) 90

Stipulation re Use of Depositions of John B. Webber, Walter S. Culver and Frank H. King (Mar. 3, 1931) 91

Stipulation re Deposition of William Mitchell (Mar. 4, 1931) 92

Order Permitting Taking of Depositions at South Milwaukee, Wisconsin (Apr. 20, 1931) 92

Motion by Plaintiff for Prompt Decree 93

TRIAL PAPERS
In Case No. 965

Order of Consolidation for Appeal (Sep. 15, 1931) 95

Bill of Complaint (Feb. 9, 1929) 96

Patents in Suit [See Pages 91, 97 and 109 of Exhibits, Vol. III] 103

Final Decree (Keystone vs. Byers) [See page 10 of this Volume] 103

Opinion of Judge Jones (Keystone vs. Byers) [See page 14 of this Volume] 103

Plaintiff's Interrogatories (Feb. 9, 1929) 104

Exhibit 1. Osgood Bulletin No. 2620 [See Page 45 of Exhibits, Vol. III] 105

Exhibit 2. Osgood Bulletin No. 2624 [See Page 73 of Exhibits, Vol. III] 105

Exhibit 3. Osgood Pictorial News [See Pages 77 and 79 of Exhibits, Vol. III] 105

Exhibit 4. Letter, Nov. 2, 1927, The Osgood Co. to Frank L. Sessions 105

Exhibit 8. Photograph No. 3664 [See Page 81 of Exhibits, Vol. III] 105

Affidavit of Robert Rex Downie (Feb. 9, 1929) 107

Affidavit of Philip E. Siggers (Feb. 9, 1929) 110

Exhibit 5. Letter, Nov. 10, 1927, Philip E. Siggers to The Osgood Co. 111

Exhibit 6. Letter, Jan. 24, 1929, Siggers & Adams to The Osgood Co. 112

Exhibit 7. Letter, Jan. 31, 1929, F. O. Richey to The Osgood Co. 113

Motion for Preliminary Injunction (Feb. 9, 1929) 114

Order to Show Cause (Feb. 9, 1929) 115

Order Modifying the Dates in the Order to Show Cause (Feb. 16, 1929) 116

Order Modifying the Dates in the Order to Show Cause (Feb. 20, 1929) 116

Objections to Plaintiff's Interrogatories (Feb. 26, 1929) 117

Plaintiff's Answer to Defendant's Objection to Plaintiff's Interrogatories (Mar. 5, 1929) 118

Stipulation Extending Time to Answer Until April 3, 1929 (Mar. 9, 1929) 119

Order Modifying the Dates in the Order to Show Cause (Mar. 9, 1929) 120

Order Extending Plaintiff's Time for Serving Rebuttal Papers (Mar. 28, 1929) 121

Answer of The Osgood Company (Apr. 3, 1929) 121

Stipulation re Use of Uncertified Copies of Patents, etc., at Trial (Apr. 9, 1929) 134

Stipulation re Interrogatories and Depositions (Apr. 22, 1929) 135

Memorandum Opinion of Court on Motion for Preliminary Injunction (Apr. 25, 1929) 135

Stipulation re Interrogatories and Depositions (May 27, 1929) 136

Order Denying Motion for Preliminary Injunction (Jun. 6, 1929) 137

Bond (Jun. 6, 1929) 138

Supplemental Bill of Complaint (Aug. 21, 1929) 139

Downie Patents Nos. 1,709,466 and 1,716,432 [See Pages 119 and 129 of Exhibits, Vol. III] 145

Order Permitting Filing of Supplemental Bill of Complaint (Aug. 23, 1929) 145

Motion for Extension of Defendant's Time for Filing Answer to Supplemental Bill of Complaint and Order Granting Extension (Sep. 7, 1929) 146

Order Permitting The General Excavator Co. and The Osgood Co. to Take Depositions Jointly (Sep. 9, 1929) 147

Stipulation re Depositions (Sep. 28, 1929) 148

Answer to Supplemental Bill of Complaint (Oct. 1, 1929) ... 148

Plaintiff's Interrogatories (Oct. 21, 1929) 156

Exhibits 1 to 13. Photographs [See Pages 83, 85, 87 and 89 of Exhibits, Vol. III] 157

Stipulation re Depositions (Oct. 22, 1929) 158

Stipulation re Depositions (Oct. 26, 1929) 159

Objections to Plaintiff's Interrogatories (Oct. 31, 1929) 159
Stipulation re Depositions (Nov. 30, 1929) 161
Stipulation re Depositions (Dec. 24, 1929) 161
Stipulation re Depositions (Feb. 4, 1930) 162
Motion for Extension of Time for Taking Depositions and Order Granting Motion (Feb. 21, 1930) 162
Stipulation re Depositions (Feb. 27, 1930) 163
Motion to Extend Time to Take Depositions and Order Granting Extension (Mar. 17, 1930) 163
Affidavit of Edwin P. Corbett in Support of Motion (Mar. 17, 1930) 164
Stipulation re Depositions (Apr. 4, 1930) 165
Stipulation re Depositions (Apr. 29, 1930) 165
Stipulation re Depositions (Apr. 29, 1930) 166
Stipulation re Depositions (May 9, 1930) 166
Stipulation re Depositions (May 29, 1930) 167
Order Permitting Substitution of Bond (May 29, 1930) 167
Bond (May 29, 1930) 168
Stipulation re Depositions (Jun. 11, 1930) 169
Stipulation re Depositions (Jun. 28, 1930) 170
Stipulation re Depositions (Jul. 29, 1930) 170
Stipulation re Depositions (Aug. 27, 1930) 171
Stipulation re Depositions (Sep. 20, 1930) 171
Order Extending Time for Taking Depositions (Sep. 29, 1930) 172
Order Extending Time for Taking Depositions (Oct. 29, 1930) 172
Order Extending Time for Taking Depositions (Nov. 26, 1930) 172
Motion to Compel Production and Inspection of Documents (Dec. 19, 1930) 173
Affidavit of Edwin P. Corbett in Support of Motion (Dec. 19, 1930) 175
Affidavit of John J. Mahoney in Support of Motion (Dec. 19, 1930) 178
Affidavit of A. H. Edgerton (Dec. 20, 1930) 182

Affidavit of F. O. Richey and A. H. Edgerton (Dec. 31, 1930) 183

Affidavit of Robert Rex Downie (Dec. 31, 1930) 185

Offer by Plaintiff to Produce Letters, Documents, etc. (Dec. 31, 1930) 189

Second Affidavit of John J. Mahoney (Jan. 2, 1931) 190

Exhibit A. Letter, Nov. 4, 1930, Corbett & Mahoney to Richey & Watts 197

Notice Under Revised Statutes of United States, Section No. 4920 (Feb. 3, 1931) 198

Order Dismissing Defendant's Motion to Compel Production and Inspection of Documents (Feb. 2, 1931) 205

Order Permitting Amendment to Defendant's Answer to be Filed (Mar. 2, 1931) 206

Amendment to Answer to Original Bill of Complaint (Mar. 2, 1931) 207

Order Permitting Amendment to be Made to Defendant's Answer to Supplemental Bill of Complaint 212

Amendment to Answer to Supplemental Bill of Complaint. (Mar. 2, 1931) 212

Order Consolidating Cause No. 965 with Cause No. 964 for the Purpose of Trial (Mar. 3, 1931) 214

Stipulation re Depositions of John B. Webber, Walter S. Culver and Frank H. King (Mar. 3, 1921) 215

Stipulation re Deposition of William Mitchell 215

Order Permitting Taking of Depositions at South Milwaukee, Wisconsin (Apr. 17, 1931) 216

Cases Nos. 964 and 965

Stipulations as to the Correctness of the Narrative Statement of Testimony (Sep. 26, 1931) 217

Orders Approving Narrative (Sep. 26, 1931) 218

NARRATIVE STATEMENT OF EVIDENCE
UNDER EQUITY RULE 75
Cases Nos. 964 and 965

Appearances 219
As to the Claims of the Patents in Suit 219

PLAINTIFF'S CASE
TESTIMONY IN OPEN COURT

Exhibits Offered in Evidence 220

Rex R. Downie:
Direct Examination by Mr. Richey 221
Cross Examination by Mr. Corbett 228
Cross Examination by Mr. Corbett 267
Re-Direct Examination by Mr. Richey 298

Edward M. Morrison:
Direct Examination by Mr. Edgerton 303
Cross Examination by Mr. Corbett 304

Robert C. Sessions:
Direct Examination by Mr. Richey 306

Edward M. Morrison:
Direct Examination by Mr. Richey 317
Cross Examination by Mr. Corbett 318
Cross Examination by Mr. Reed 319

Howard H. Elmire:
Direct Examination by Mr. Edgerton 320

Robert C. Sessions:
Direct Examination by Mr. Richey 323
Cross Examination by Mr. Corbett 334
Cross Examination by Mr. Reed 339

DEFENDANTS' CASE

TESTIMONY IN OPEN COURT

George Green:
Direct Examination by Mr. Corbett 342
Cross Examination by Mr. Richey 363

Pearl Davis:
Direct Examination by Mr. Corbett 371
Cross Examination by Mr. Richey 376

George E. Turner:
Direct Examination by Mr. Corbett 379

DEPOSITIONS FOR THE DEFENDANTS.

Taken at Cincinnati, Ohio
(September 10, 1929)

Notices of Taking Testimony 393

Daniel H. Mahoney:
Direct Examination by Mr. Mahoney 394
Cross Examination by Mr. Siggers 405
Re-Direct Examination by Mr. Mahoney 432
Re-Cross Examination by Mr. Siggers 432

Taken at Vincennes, Indiana
(September 16, 1929)

Notices of Taking Testimony 433

L. B. Read:
Direct Examination by Mr. Mahoney 434

Frank J. Kapps:
Direct Examination by Mr. Mahoney 435

Frank A. Lang:
Direct Examination by Mr. Mahoney 438

Winn H. Reel:
Direct Examination by Mr. Mahoney 443

Robert E. Lind:
Direct Examination by Mr. Mahoney 445
Cross Examination by Mr. Edgerton 445

William F. Stein:
Direct Examination by Mr. Mahoney 446
Cross Examination by Mr. Edgerton 447
David H. Bond:
Direct Examination by Mr. Mahoney 448
John W. Lenahan:
Direct Examination by Mr. Mahoney 449
Lyman H. Barekman:
Direct Examination by Mr. Mahoney 450
Ernest Vollmer:
Direct Examination by Mr. Mahoney 453
Cross Examination by Mr. Edgerton 454

Taken at Murphysboro, Illinois
(October 17, 1929)

Notices of Taking Testimony 455
William Bradshaw:
Direct Examination by Mr. Mahoney 456
Cross Examination by Mr. Edgerton 457
Joseph Moschenrose:
Direct Examination by Mr. Mahoney 457
C. Crain:
Direct Examination by Mr. Mahoney 458
Henry Stone:
Direct Examination by Mr. Mahoney 459
Joseph T. Glenn:
Direct Examination by Mr. Mahoney 460
George Stone:
Direct Examination by Mr. Mahoney 461
George DeRemo:
Direct Examination by Mr. Mahoney 462
Cross Examination by Mr. Edgerton 464
Thomas G. Dunn:
Direct Examination by Mr. Mahoney 465

Taken at Washington, D. C.
(November 22, 1929)

Notices of Taking Testimony 468

Eugene W. Johnson:
Direct Examination by Mr. Mahoney 469
Cross Examination by Mr. Edgerton 473

Taken at Toledo, Ohio
(January 23, 1930)

Notices of Taking Testimony 478

John B. Webber:
Direct Examination by Mr. Mahoney 479
Cross Examination by Mr. Edgerton 486
Re-Direct Examination by Mr. Mahoney 489
Re-Cross Examination by Mr. Edgerton 490

Walter S. Culver:
Direct Examination by Mr. Mahoney 491
Cross Examination by Mr. Edgerton 494

Taken at Marion, Ohio
(May 21, 1930)

Notices of Taking Testimony 495

William Mitchell:
Direct Examination by Mr. Mahoney 496
Cross Examination by Mr. Edgerton 504

Taken at Marion, Ohio
(November 28, 1930)

Notices of Taking Testimony 505

Frank H. King:
Direct Examination by Mr. Mahoney 506
Cross Examination by Mr. Edgerton 512

Taken at Akron, Ohio
(September 16, 1930)

Notices of Taking Testimony 514
George E. Wagner:
Direct Examination by Mr. Mahoney 515

TESTIMONY IN OPEN COURT
(Continued)

George E. Turner:
Direct Examination by Mr. Corbett 519
Direct Examination by Mr. Reed 556
Cross Examination by Mr. Richey 559
Re-Direct Examination by Mr. Corbett 566
Re-Cross Examination by Mr. Richey 568
Re-Direct Examination by Mr. Corbett 569

DEPOSITIONS FOR DEFENDANTS
(Continued)

Taken at Lakewood, New Jersey
(February 24, 1930)

Notices of Taking Testimony 571
Bernard R. Clutter:
Direct Examination by Mr. Mahoney 572
Cross Examination by Mr. Edgerton 582

Taken at Joplin, Missouri
(March 19, 1930)

Notices of Taking Testimony 585
Phil Culbertson:
Direct Examination by Mr. Mahoney 586
Cross Examination by Mr. Edgerton 590
W. L. Culbertson:
Direct Examination by Mr. Mahoney 590
Cross Examination by Mr. Edgerton 592
John Cummings:
Direct Examination by Mr. Mahoney 592
Cross Examination by Mr. Edgerton 595

M. A. Elsner:
Direct Examination by Mr. Mahoney 596
Lysle L. Hazen:
Direct Examination by Mr. Mahoney 598
Cross Examination by Mr. Edgerton 604

(Continued in Vol. II)

CAPTION.

UNITED STATES OF AMERICA,
NORTHERN DISTRICT OF OHIO,
WESTERN DIVISION, ss.

RECORD of the proceedings of the District Court of the United States within and for the Western Division of the Northern District of Ohio, in the cause and matter hereinafter stated, the same being finally disposed of at a regular term of said Court begun and held at the City of Toledo, in said District, on the last Tuesday in April, being the 28th day of said month in the year of our Lord One Thousand Nine Hundred and Thirty-one, and of the Independence of the United States of America the One Hundred and Fifty-sixth, to-wit: on Tuesday, the 21st day of July, A. D., 1931.

Present: Honorable GEORGE P. HAHN, *United States District Judge.*

KEYSTONE DRILLER COMPANY,
vs.
THE GENERAL EXCAVATOR COMPANY. } No. 964 IN EQUITY.

KEYSTONE DRILLER COMPANY,
vs.
THE OSGOOD COMPANY. } No. 965 IN EQUITY.

Said action was commenced on the 9th day of February, A. D., 1929, and proceeded to final disposition at the term and day above written, and during the progress thereof, pleadings and papers were filed, process was issued and returned and orders of the Court were made and entered in the order and on the dates hereinafter stated, to-wit:

ORDER OF CONSOLIDATION FOR APPEAL.

(Entered Sept. 15, 1931, by Geo. P. Hahn, Judge.)

[Case No. 964]

It appearing to the Court that the cases of Keystone Driller Company vs. The General Excavator Company and Keystone Driller Company vs. The Osgood Company Nos. 964 and 965 respectively were consolidated for trial, and it further appearing that the best interest of everyone concerned can be served by the consolidation of the printed record in these cases to be sent to the Circuit Court of Appeals,

IT IS THEREFORE ORDERED That the said cases be consolidated into one printed record for the purpose of their removal to the Circuit Court of Appeals for the Sixth Circuit, said record to contain pleadings and papers in each individual case but to include only one copy of such records as appear identical in each case.

GEO. P. HAHN,
United States District Judge.

Dated September 15, 1931.

BILL OF COMPLAINT.

(Filed Feb. 9, 1929.)

[Case No. 964]

To the Honorable, the Judges of the District Court of the United States for the Northern District of Ohio, Western Division:

Keystone Driller Company, plaintiff, brings this its bill of complaint against The General Excavator Company, defendant; and plaintiff avers:

I. Plaintiff is a corporation of the State of Pennsylvania, having its principal place of business at Beaver Falls, Pennsylvania, and is a citizen and inhabitant of said State of Pennsylvania.

On information and belief, defendant is a corporation of the State of Ohio, having its principal place of business at Marion, Marion County, Ohio, and is a citizen and inhabitant of said State of Ohio and of the Northern District of Ohio, Western Division.

II. The Court's jurisdiction in this cause is based upon the grounds that the suit is one for infringement of United States patents and prays equitable relief and that the defendant is an inhabitant of the aforesaid district and/or has therein a regular and established place of business where it has committed acts of infringement hereinafter complained of.

III. On and prior to February 11, 1915, Le Roy P. Clutter, a citizen of the United States, then residing at Beaver Falls, Pennsylvania, was the original, first and true inventor of certain new and useful improvements in Ditching or Excavating Machines, not known or used by others in this country before his invention or discovery thereof, and not patented or described in any printed publication in this or any foreign country before his invention or discovery thereof or more than two years prior to his hereinafter mentioned application for patent therefor in the United States, and not in public use or on sale in the United States for more than two years prior to said application, and not by him abandoned prior to said application, and not first patented or caused to be patented by him or his legal representatives or assigns in any foreign country upon an application filed more than twelve months prior to the filing of said application in the United States. So being the original, first and true inventor, as aforesaid, said Le Roy P. Clutter, on February 11, 1915, made application to the Com-

missioner of Patents of the United States for a patent for said invention, in accordance with the then existing laws of the United States, and complied in all respects with the conditions and requirements of said laws.

IV. Upon said application of Le Roy P. Clutter, due proceedings were had, in accordance with all requirements of law, such that on September 30, 1919, United States patent No. 1,317,431, signed, sealed and executed in due form of law, was issued for said invention or improvements in Ditching or Excavating Machines, to said Le Roy P. Clutter. And plaintiff brings here into court a copy of said patent and prays that the same may be taken as part of this bill of complaint.

V. For good and valuable consideration, by an instrument in writing executed and delivered on or about May 17, 1921, said Le Roy P. Clutter assigned unto plaintiff the entire right, title and interest in and to said patent No. 1,317,431, together with all rights of recovery for past infringement thereof; as by reference to said instrument or a duly authenticated copy thereof here in court to be produced will more fully appear.

VI. On and prior to June 27, 1921, Robert Rex Downie, a citizen of the United States, then residing at Beaver Falls, Pennsylvania, was the original, first and true inventor of new and useful improvements in Excavating Machines, not known or used by others in this country before his invention or discovery thereof, and not patented or described in any printed publication in this or any foreign country before his invention or discovery thereof or more than two years prior to his hereinafter mentioned application for patent therefor in the United States, and not in public use or on sale in the United States for more than two years prior to said application, and not by him abandoned to the public, and not first patented or caused to be patented by him or his legal representatives or assigns, in any foreign country upon an application filed more than twelve months prior to the filing of said application in the United States. So being the original, first and true inventor, as aforesaid, said Robert Rex Downie, on June 27, 1921, made application to the Commissioner of Patents of the United States for a patent for his said invention, in accordance with the then existing laws of the United States, and complied in all respects with the conditions and requirements of said laws.

VII. For good and valuable consideration, by an instrument in writing executed and recorded in the Patent Office before the grant of a patent on his said application, the said Robert Rex Downie assigned to plaintiff the whole right, title and interest in and to his said invention and authorized the Commissioner of Patents to issue the patent for said invention to the plaintiff.

VIII. Upon said application of Robert Rex Downie, and pursuant to his said assignment to plaintiff, due proceedings were had, in accordance with all requirements of law, such that on October 7, 1924, United States patent No. 1,511,114, signed, sealed and executed in due form of law, was issued to plaintiff for said invention or improvements in Excavating Machines. And plaintiff brings here into court a copy of said patent No. 1,511,114 and prays that the same may be taken as part of this bill of complaint.

IX. On and prior to January 8, 1925, Robert Rex Downie, a citizen of the United States, then residing at Beaver Falls, Pennsylvania, was the original, first and true inventor of certain new and useful improvements in Excavating Machines, not known or used by others in this country before his invention or discovery thereof, not patented or described in any printed publication in this or any foreign country before his invention or discovery thereof or more than two years prior to his hereinafter mentioned application for patent therefor in the United States, and not in public use or on sale in the United States for more than two years prior to said application, and not by him abandoned to the public, and not first patented or caused to be patented by him or his legal representatives or assigns in any foreign country upon an application filed more than twelve months prior to the filing of said application in the United States. So being the original, first and true inventor, as aforesaid, said Robert Rex Downie, on January 8, 1925, made application to the Commissioner of Patents of the United States for a patent on his said invention, in accordance with the then existing laws of the United States, and complied in all respects with said laws.

X. For good and valuable consideration by an instrument in writing executed and recorded in the Patent Office before the grant of a patent on his said application of January 8, 1925, the said Robert Rex Downie assigned to plaintiff the whole right, title and interest in

and to his said invention set forth in the application last mentioned, and authorized the Commissioner of Patents to issue the patent therefor to the plaintiff.

XI. Upon said Robert Rex Downie's said application of January 8, 1925, and pursuant to his assignment to plaintiff of the invention described therein, due proceedings were had, in accordance with all requirements of law, such that on June 23, 1925, United States patent No. 1,543,250, signed, sealed and executed in due form of law, was issued to plaintiff for said invention or improvements in Excavating Machines. And plaintiff brings here into court a copy of said patent No. 1,543,250 and prays that the same may be taken as part of this bill of complaint.

XII. By reason of the premises, prior to the filing of this bill of complaint, and prior to the acts of infringement hereinafter complained of, plaintiff became and has ever since remained and now is the sole owner of said patents Nos. 1,317,431, 1,511,114 and 1,543,250, and of all rights thereunder including all rights of recovery for past infringement of said patent 1,317,431 since the date of the assignment thereof.

XIII. Under the protection of the aforesaid patents, plaintiff is engaged in the manufacture and sale of Excavating Machines embodying said inventions. Said inventions of said patents and each of them are of great utility and value, and have come extensively into public use, with substantial benefits to the public and to the plaintiff. The plaintiff has been to large effort and expense in and about said inventions for the purpose of introducing them into use and supplying embodiments thereof. Its business in this connection is now threatened with irreparable injury by the acts of defendant hereinafter complained of.

XIV. Prior to December 22, 1926, The Byers Machine Company, a corporation of Ohio, doing business at Ravenna, Ohio, within the Northern District of Ohio and the Eastern Division thereof, made, used and sold and was threatening to continue to make, use and sell excavating machines embodying the inventions set forth in said patents Nos. 1,317,431, 1,511,114 and 1,543,250 and in infringement and in violation of the rights of the plaintiff, Keystone Driller Company, under the aforesaid letters patent; wherefore said plaintiff, on December 22, 1926 brought its bill of complaint in the District Court

of the United States for the Northern District of Ohio, Eastern Division, at Cleveland, Ohio, against said The Byers Machine Company, and in said suit (Equity No. 2084) complained that the said The Byers Machine Company had infringed claim 4 of patent No. 1,317,431 and claims 1 to 14 inclusive of patent No. 1,511,114 and claims 1 to 10 inclusive of patent No. 1,543,250 and threatened further infringement of said letters patent; and said The Byers Machine Company filed its answer to the said bill of complaint; that after the filing of said answer, by stipulation between counsel for the parties to said suit, Byers Machine Company, a corporation of Maryland, was made a party defendant, and the bill of complaint filed December 22, 1926 was amended *nunc pro tunc* to include this new party defendant, Byers Machine Company, and said Byers Machine Company filed an amended answer to the amended bill of complaint; and said cause was tried before the Hon. D. C. Westenhaver, at Cleveland, Ohio, on September 15, 16 and 19, 1927 and was submitted on the briefs of the opposing parties without oral argument by counsel for the respective parties, that the Hon. D. C. Westenhaver died in July, 1928 without having rendered an opinion; that by stipulation between counsel for the respective parties the cause was submitted to the Hon. Paul Jones, District Judge, at Cleveland, Ohio, without a second trial, and was argued before him on January 9, 1929 by counsel for the respective parties; and on the twenty-third day of January, 1929 the court rendered its opinion sustaining the validity of claim 4 of patent No. 1,317,431, claims 1 to 14 inclusive of patent No. 1,511,114 and claims 1 to 10 inclusive of patent No. 1,543,250, and finding all said claims infringed; and on the thirty-first day of January, 1929 a final decree was entered for the plaintiff, Keystone Driller Company, affirming the validity of the claims aforesaid, and ordering a perpetual injunction enjoining and restraining said The Byers Machine Company and Byers Machine Company and each of them from infringing said claims, as will fully appear by reference to the attached copy of the decree; and said perpetual injunction was accordingly issued February 1, 1929 and served that day on a duly authorized agent for said defendants.

XV. Since the respective dates of issue of said patents Nos. 1,317,431, 1,511,114 and 1,543,250, and since the plaintiff acquired its title to and rights under said patents as hereinbefore recited, and within six years next

preceding the filing of this bill of complaint, and without leave of or license from plaintiff, and in defiance of said patents and each of them and of plaintiff's rights thereunder, the said The General Excavator Company has made and/or caused to be made and has used and has sold, and is now making, using and selling, within said Northern District of Ohio, Western Division, and elsewhere within the United States of America, numerous excavating machines embodying the inventions described and claimed in and patented by said patents Nos. 1,317,431, 1,511,114 and 1,543,250, and each of them, in infringement of said patents and each of them, and particularly in infringement of claims 1, 3, 4 and 9 of said patent No. 1,317,431, of claims 6, 7, 8, 9, 10, 11, 12, 13 and 14 of said patent No. 1,511,114, and of claims 1, 2, 3, 4, 5, 6, 9 and 10 of said patent No. 1,543,250, all as by reference to the accompanying affidavit of Robert Rex Downie together with the exhibits attached thereto will more fully appear.

XVI. Defendant has derived and continues to derive unlawful gains and profits from said infringement, and plaintiff has suffered and is threatened with irreparable damage by reason of said infringement. Defendant threatens to continue all of said acts above complained of. Defendant by its acts aforesaid has impaired plaintiff's enjoyment of its exclusive rights and privileges granted upon issue of said letters patent, and each of them, and has unjustly deprived plaintiff of large profits which it would have realized and enjoyed from said inventions except for defendant's infringement.

XVII. The inventions of the aforesaid patents are susceptible of conjoint embodiment and use in one and the same construction, and have been so conjointly embodied and used in the machines made and sold by defendant as aforesaid.

XVIII. Plaintiff has given notice to the public that its machines are patented by fixing thereon the word "patented" together with the day and year each of its aforesaid patents was granted. Plaintiff has also specially notified defendant of said patents and of plaintiff's ownership thereof and of the infringements complained of, but said defendant has continued and will unless restrained continue its acts complained of notwithstanding and in spite of said notice.

WHEREFORE plaintiff prays:

(a) That the defendant, The General Excavator Company, be directed to appear and answer this bill of complaint (but not under oath, answer under oath being expressly waived), and to abide by and perform such orders and decrees as the court may deem proper.

(b) That the defendant, The General Excavator Company, and its officers, agents, servants, employees, and all persons in privity with them and each of them, be enjoined and restrained *pendente lite*, by decree and injunction of this court, from directly or contributorily infringing plaintiff's said patents Nos. 1,317,431, 1,511,114 and 1,543,250, and each of them.

(c) That the defendant, The General Excavator Company, and its officers, agents, servants, employees, and all persons in privity with them, and each of them, be enjoined and restrained perpetually, by decree and injunction of this court, from directly or contributorily infringing plaintiff's said patents Nos. 1,317,431, 1,511,114 and 1,543,250 and each of them.

(d) That the defendant, The General Excavator Company, be required to account to plaintiff for the profits realized by defendant and the damages to plaintiff in the premises; and that this cause be referred to a Master to take an accounting of said profits and damages; and that such damages be increased to three times the amount thereof or as to the Court may seem meet in view of all the circumstances.

(e) That said defendant be decreed to pay the costs and disbursements of this suit to be taxed.

(f) And that plaintiff have such other and further relief as to the court may seem meet.

KEYSTONE DRILLER COMPANY,
ROBERT REX DOWNIE,
Secretary.

GEO. E. KIRK,
Solicitor.

RICHEY & WATTS,
Solicitors.

PHILIP E. SIGGERS,
Of Counsel.

Verification.

STATE OF OHIO,
COUNTY OF CUYAHOGA, ss.

Robert Rex Downie, being duly sworn, deposes and says that he is Secretary of the corporation Keystone Driller Company, the plaintiff named in the foregoing bill of complaint; that he has read this bill; that insofar as the statements contained in this bill are within his knowledge they are true, and so far as they are derived from information and belief, he verily believes them to be true.

ROBERT REX DOWNIE.

Subscribed and sworn to before me this 7th day of February, 1929.

FLORENCE ANN KOFSKY,
(Notarial Seal). *Notary Public.*

PRINTER'S NOTE:

Copies of U. S. Patents Nos. 1,317,431 to LeRoy P. Clutter; 1,511,114 to Robert R. Downie and 1,543,250 to Robert R. Downie were attached to this Bill of Complaint, but same have been omitted at this point, as they are listed as a part of Defendant's Exhibit No. 62, Book of Patents.

FINAL DECREE.

(In the case of *Keystone Driller Company vs. The Byers Machine Company and Byers Machine Company,* in the U. S. District Court for the Northern District of Ohio, Eastern Division, being Equity Case No. 2084.)

(Entered January 31, 1929, by Paul Jones, Judge.)

This cause came on to be further heard at this term, and was argued by counsel; and thereupon, upon consideration thereof, it was ordered, adjudged and decreed as follows, viz:

(1) That Letters Patent of the United States to LeRoy P. Clutter, No. 1,317,431, dated September 30, 1919, for Ditching or Excavating Machine, is good and valid in law as to claim 4 thereof; that the inventor, LeRoy P. Clutter, named in the said patent was the first, true and original inventor of the invention, improvement and combination described in said claim 4; and that the Plaintiff, Keystone Driller Company, is the lawful owner of the entire right, title and interest in and to said inven-

tion and in and to the Letters Patent therefor as aforesaid;

That Letters Patent of the United States to G. E. Wagner, *et al.*, No. 1,476,121, dated December 4, 1923, for Excavating Scoop, is good and valid in law as to claims 6 and 7 thereof; that the inventors G. E. Wagner, *et al.*, named in the said patent, were the first, true, original and joint inventors of the inventions, improvements and combinations described in claims 6 and 7 of said patent; and that the Plaintiff, the Keystone Driller Company, is the lawful owner of the entire right, title and interest in and to said inventions and in and to the Letters Patent therefor as aforesaid;

That Letters Patents of the United States to Robert Rex Downie, No. 1,511,114, dated October 7, 1924, and No. 1,543,250 dated June 23, 1925 for Excavating Machines, are good and valid in law as to all the claims of each patent thereof; that the inventor, Robert Rex Downie, named in the said patents was the first, true and original inventor of the inventions, improvements and combinations described in the said patents and in said claims; and that the Plaintiff, the Keystone Driller Company, is the lawful owner of the entire right, title and interest in and to said inventions and in and to the said Letters Patents therefor as aforesaid;

That the Defendant, The Byers Machine Company, has infringed upon said Letters Patents within the Northern District of Ohio, Eastern Division, and elsewhere in the United States, by the manufacture, sale and/or use of Ditching or Excavating Machines, Excavating Scoops and Excavating Machines employing and/or embodying the inventions set forth in the claims of certain of said patents, and particularly upon claim 4 of Patent No. 1,317,431 by the manufacture, sale and/or use of machines illustrated on pages 2, 10 and 11 and elsewhere in Exhibit 16 and upon pages 2, 6, 14, 16, 17, 18, 19, 50 and 58 and elsewhere in Exhibit 17; all of the claims of Patent No. 1,511,114 by the manufacture, sale and/or use of the machines illustrated on pages 2, 10 and 11 and elsewhere in Exhibit 16 and upon pages 2, 6, 14, 16, 17, 18, 19, 50 and 58 and elsewhere in Exhibit 17; and all of the claims of Patent No. 1,543,250 by the manufacture, sale and/or use of the machines illustrated on pages 2, 10 and 11 and elsewhere in Exhibit 16 and upon pages 2, 6, 14, 16, 17, 18, 19, 50 and 58 and elsewhere in Exhibit 17; and the Defendant, Byers Machine Company, has in-

fringed upon said Letters Patents within the Northern District of Ohio, Eastern Division, and elsewhere in the United States, by the manufacture, sale and/or use of Ditching or Excavating Machines, Excavating Scoops and Excavating Machines employing and/or embodying the inventions set forth in the claims of certain of said patents, and particularly upon claims 6 and 7 of Patent No. 1,476,121 by the maufacture, sale and/or use of the machines illustrated on pages 8, 9, 21, 22, 23, 24, 26 and 50 and elsewhere in Exhibit 18; and claims 6 to 14, both inclusive of Patent 1,511,114 by the manufacture, sale and/or use of the machines illustrated on pages 8, 9, 21, 22, 23, 24, 26 and 50 and elsewhere in Exhibit 18; and Byers Machine Company is threatening to infringe claim 4 of said Clutter patent, No. 1,317,431 and claims 1 to 5, inclusive, of said Downie patent, No. 1,511,114 by offering to sell and/or use machines like those illustrated in the said pages of Exhibits 16 and 17; and The Byers Machine Company is threatening to infringe claims 6 and 7 of the patent to Wagner *et al.*, No. 1,476,121 by offering to sell and/or use machines like those illustrated in the said pages of Exhibit No. 18;

(2) That the Plaintiff do recover from each of the Defendants, The Byers Machine Company and Byers Machine Company, all profits, gains and advantages which the said Defendants, have or shall have derived, received or made by reason of said infringements, and that the Plaintiff do recover from each of said Defendants any and all damages which the Plaintiff has sustained, or shall sustain by reason of said infringement by said Defendants;

(3) That this cause be, and the same is hereby referred to ..... Esq., a Master, to ascertain the amount of such gains and profits and the amount of damages sustained by said Plaintiff by reason of such infringement; that the Defendants file their respective accounts with said Master in accordance with the Rules of Equity of the Supreme Court of the United States relevant thereto; that on such accounting the Plaintiff shall have the right to cause an examination of the officers, servants, agents, and employees of the Defendants and of each of them orally or otherwise, and also to cause the production of Defendants' books, vouchers, accounts, bills of lading, shop orders, and all documents relating to the manufacture of ditchers and parts thereof by Defendants and each of them, and that said

Defendants, through their representatives, attend for such purpose before the Master from time to time as said Master shall direct; and that all testimony and exhibits offered and used in this cause on behalf of either party may be referred to and used in such accounting;

(4) That an injunction be issued out of and under the seal of this Court direct to the Defendants, The Byers Machine Company and Byers Machine Company, and each of them, and each of their officers, servants, agents, employees and workmen, and all their privies, and each and every one of them, enjoining and restraining them during the remainder of the respective terms of said Letters Patents, No. 1,317,431, No. 1,476,121, No. 1,511,114 and No. 1,543,250, from directly or indirectly constructing, or causing to be constructed, and/or using, and/or selling, or causing to be used or sold, or advertising for sale, ditching or excavating machines and excavating scoops like apparatus illustrated in Plaintiff's Exhibit 16, page 2, the lower figure thereon, page 10, the left figure thereon and page 11 and elsewhere in the exhibit, Plaintiff's Exhibit 17, page 2, the lower left figure thereon, page 6, the uppermost figure thereon, page 14, pages 16, 17, 18, 19, 50 and 58 and elsewhere in the exhibit, Plaintiff's Exhibit 18, pages 8, 9, 21, 22, 23, 24, 26 and 50 and elsewhere in the exhibit, and any other apparatus, articles, devices or parts, and/or combinations, containing, employing or embodying the inventions and improvements described in said Letters Patents, No. 1,317,431 and particularly referred to in claim 4 thereof, and No. 1,476,121, and particularly referred to in claims 6 and 7 thereof, and No. 1,511,114 and No. 1,543,250 and particularly referred to in the claims thereof or any of them, or apparatus, article, devices, ditching or excavating machines or excavating scoop to be used, or capable only of use, in a combination infringing any of said patents, and from infringing and contributing to infringement upon or violating any of said Letters Patent in any way whatsoever;

(5) That the Plaintiff recover from the Defendants, the Plaintiff's full costs in this suit to be taxed and to have execution therefor.

Entered this 31st day of January, 1929.

PAUL JONES,

United States District Judge.

Approved as to form this 31st day of January, 1929.

FAY, OBERLIN & FAY,

Attorneys for Defendants.

OPINION OF JONES, JUDGE.

(In the Case of *Keystone Driller Company vs. The Byers Machine Company and Byers Machine Company,* in the U. S. District Court for the Northern District of Ohio, Eastern Division, being Equity No. 2084.)

(Filed January 23, 1929.)

JONES, *J.:*

This cause was tried and submitted to the Hon. D. C. Westenhaver in September, 1927. Due to his sickness and subsequent death, it was not decided. By written stipulation of counsel for the parties, it was agreed that the matter should be submitted without re-trial to one of the Judges of this Court; and upon oral argument had January 9th, 1929, the matter was submitted on the record and briefs.

This is a patent infringement suit involving pull stroke ditchers or excavating scoops and machines. They are distinguished from the ordinary steam shovel in that they dig inwardly, toward the operating machine, as a pick or hoe, rather than away from the machine, as a shovel. The pull stroke or inwardly digging shovel has an outstanding advantage over the ordinary steam shovel in that the ditch or trench is cut the width of the bucket only, and the machine always remains on solid ground as the excavation progresses, rather than astride or over the wall of the ditch or trench. Another advantage urged for this type of machine is its interchangeable character—that is, construction for other uses may be applied to the same operating machinery. The patents claimed to be infringed are, generally speaking, combinations of old elements producing improvements and advantages over prior conceptions and embodying many of the functional elements of earlier invention. Plaintiffs contend that Claim 4 of Clutter patent 1,317,431, Claims 5, 6, 7 and 9, of Wagner 1,476,121, and all claims of the two Downie patents 1,511,114 and 1,543,250, are infringed by the defendants' constructions. It is the plaintiff's claim that the infringing use of these inventions is disclosed by plaintiff's exhibits 16, 17 and 18, which are to be found in the defendants' advertising catalogs and referred to as, "Byers Bear Cat."

One of the chief advantages claimed for the plaintiff's machine is its ability to break through, with a hammer-like blow, rock, shale, sandstone, and the like, found near the ground surface, thus doing away with considerable blasting. Another advantage being its con-

trol by two lines, or two control members; and, further, that it has the advantage of exact spotting in a wide area or range for the discharge of the spoil or contents of the scoop, having the falling bottom which may be closed by momentum produced by manipulation of the scoop, thus accomplishing, perhaps, old results in a new and useful manner, as well as obtaining new and better results by reason of a novel combination of some old elements. Such a result has been repeatedly held to require inventive faculty and produce invention.

Without going into detail or discussing technical means, I think the plaintiff's patents have initiated and accomplished, in a practical, commercial, and economical way, an advance in the field of mechanical digging, and that through its efforts and development have produced a better and, in substantial respects, a new result out of old elements in the art of trenching and ditching.

It is not thought necessary here to review the extensive reference to the prior art, since from an examination thereof nothing suggests or anticipates the novel operative control and other commercial advantages found in the claims in suit. It seems to me that the plaintiff, through the successive steps of Clutter, Wagner, and Downie, has developed the art over the earlier disclosures. I am satisfied, from a reading of the transcript of the testimony and the evidence in the case, that the defendants' construction was the result of the study of plaintiff's conceptions, Clutter, Wagner, and Downie, and the copying of the plaintiff's construction and mechanism.

The parts of the defendants' machines are combined and function in precisely the same way as the plaintiff's commercial machine. The defendant has taken substantially the plaintiff's patents. I find no substantial variation in the construction of the defendants' machine which is not within the scope of the claims relied upon or the result of mechanical suggestion and change. One of the most important accomplishments claimed by the plaintiff for its commercial machine, that of the two-member control, appears to have been stressed in the "Byers Bear Cat" catalog by the legend appearing in plaintiff's Exhibit 17, "The All-Purpose One-Man Crane," and as appears in plaintiff's Exhibit 18, "The All-Purpose One-Man Crane-Shovel."

Defendants' machines, as appear in plaintiff's Exhibits 16 and 17 (defendants' catalogs), though function-

ally differing in respect of the link or pivotal means, would seem to substantially embody the construction found in Claim 4 of Clutter, 1,317,431. It is the defendants' third construction, as illustrated by plaintiff's Exhibit 18 (Defendants' catalog), which it is contended infringes Wagner, 1,476,121. Any difference in positioning or attaching the hauling line to the ditcher stick, rather than to the open end of the scoop, is not, as I see it, a distinction sufficient to avoid infringement; no more than the difference with respect to the scoop attachment or mounting being centrally pivoted in the plaintiff's machine and flexibly mounted in the defendants'. They appear to me to embody substantially the same idea and to serve the same purpose. While the liberal treatment accorded the many claims of the Downie patents might not be extended to the various elements as units, yet the combination of admittedly old elements perform additional functions and accomplish additional results. Any weakness in that respect, it seems to me, is overcome by their novel and useful combination and commercial success.

Some question as to notice was also raised, but I find no omission in that respect to warrant a finding of failure or neglect upon which to base a denial of relief to the plaintiff.

The patents are valid and infringed as to the claims relied upon. A decree may be entered for the plaintiff, with injunction and accounting.

PAUL JONES,
United States District Judge.

January 23, 1929.

PLAINTIFF'S INTERROGATORIES.

(Filed Feb. 9, 1929.)

[Case No. 964]

Now comes the Plaintiff and presents the following interrogatories under the Equity Rules in such cases made and provided, each and all of said interrogatories to be answered in writing and under oath by an officer or employee of the Plaintiff, or by a person in authority

connected with Defendant and having knowledge of the facts inquired about:

(1) Did The General Excavator Company, the Defendant in this case, issue and distribute the catalogs or bulletins attached hereto and marked Exhibits 1 and 2, between June 23, 1925 and February 7, 1929?

(2) Did The General Excavator Company write and mail the letter to Frank L. Sessions dated March 29, 1928 and marked Exhibit 3, on or about March 29, 1928?

(3) Was F. B. Morrison the Manager in Charge of Sales of The General Excavator Company, on or about March 29, 1928?

(4) Did The General Excavator Company make, use and/or sell at Marion, Ohio, or elsewhere in the Northern District of Ohio, Western Division, between June 23, 1925 and February 7, 1929 "The Ditcher or Trencher" illustrated and described on page eleven, on the right hand side, of bulletin 2703, which is Exhibit 1?

(5) Did The General Excavator Company make, use and/or sell at Marion, Ohio, or elsewhere in the Northern District of Ohio, Western Division, between June 23, 1925 and February 7, 1929, the "backhoes" illustrated on pages one, two, nine, ten, eleven and nineteen of bulletin 2805 and described on pages eight and nine of the same bulletin, which is Exhibit 2?

(6) Did the Defendant receive shortly after the dates of the respective letters, the three letters dated April 11, 1928, January 24, 1929 and January 31, 1929, copies of which are attached to the affidavit of Philip E. Siggers, dated February 7, 1929, filed herewith?

RICHEY & WATTS,
Solicitors for Plaintiff.

GEO. E. KIRK,
SIGGERS AND ADAMS,
PHILIP E. SIGGERS,
Of Counsel for Plaintiff.
Toledo, Ohio,
February 8, 1929.

It is so ordered.

GEO. P. HAHN,
U. S. District Judge.

PRINTER'S NOTE:

To the original of Plaintiff's Interrogatories there were attached two General Excavator Catalogues, (Bulletins 2703 and 2805) marked Exhibit 1 and Exhibit 2, and the letter following.

EXHIBIT 3.

THE GENERAL EXCAVATOR COMPANY—
MARION, OHIO, U. S. A.

March Twenty-ninth 1928

Mr. Frank L. Sessions,
Rockefeller Building,
Cleveland, Ohio.

Dear Sir:—

We acknowledge with thanks receipt of your letter of the 28th requesting additional information on our ditchers and trench digging machinery. We are accordingly handing you herewith a copy of our bulletin No. 2703 which describes and illustrates our Perfected Utility—The GENERAL EXCAVATOR.

We feel certain that the merits of this machine are so apparent from the description given in this bulletin that it is not necessary for us to enter into a lengthy technical explanation of them in this letter. There are however, a few features, but briefly mentioned in the bulletin which we want to bring to your attention:

First: The GENERAL EXCAVATOR was designed by and is kept in the lead by America's most prominent and successful shovel and crane engineers.

Second: The personnel back of the organization building the GENERAL EXCAVATOR has been identified with the development, manufacture, and sale of Earth Moving Equipment for the past half century.

Third: The plant in which the GENERAL EXCAVATOR is built was designed, equipped and manned especially to build this one machine in the one size only, on a production basis. It is a standardized machine built by specialists.

The result of this combination is the perfected Utility. We invite your closest inspection and investigation. Compare it point by point with the field and observe the

number of features exclusively—The GENERAL's. Also see in what way the GENERAL excels on features which may seem similar.

We are pleased to advise you also that Mr. Sheldon M. Hird, 412 Auditorium Building, Cleveland, is representing us in your City. We are, therefore, asking Mr. Hird to call upon you at his earliest convenience and give you any additional information you may desire upon this machine, and we wish to assure you that if you will simply advise us of your needs, we shall be glad to demonstrate how quickly The General's Staff can completely execute your orders.

We want to again thank you for your inquiry, and assuring you we await your further commands with no small amount of interest, we beg to remain,

Yours truly,

THE GENERAL EXCAVATOR COMPANY.
F. B. MORRISON,
Manager in Charge of Sales.

FBM:NL
No. 5
Enc: Bul. 2703

AFFIDAVIT OF ROBERT REX DOWNIE.

(Filed Feb. 9, 1929.)

[Case No. 964]

STATE OF OHIO,
COUNTY OF CUYAHOGA, ss:

ROBERT REX DOWNIE, being duly sworn, deposes and says:

I am Secretary and General Manager of the Plaintiff Company and experienced in machines to which this suit relates and in the operation of the same. I testi-

fied in the case of Keystone Driller Company vs. The Byers Machine Company and Byers Machine Company, which was tried in the Eastern Division of the Northern District of Ohio, and which is referred to in the Bill of Complaint herein.

Since the organization a few years ago, I have known of The General Excavator Company of Marion, Ohio, the Defendant in this case, which is one of the competitors of the Plaintiff and the two Byers Companies.

I have examined the illustration and description of the Back Hoe found on page 11 of Bulletin 2703 of The General Excavator Company, Exhibit No. 1 in this case, and also the Back Hoe illustrated on pages 2, 9, 10, 11 and 19 and described on pages 8 and 9 of Bulletin No. 2805 of The General Excavator Company, marked Exhibit No. 2. Both of said bulletins are attached to the Plaintiff's Interrogatories filed herewith. I have also examined the machine illustrated in Exhibit No. 2 attached to said Plaintiff's Interrogatories. I have seen a number of these machines in operation at various times and various places in the north eastern part of the United States within the last two years, performing work of various kinds including the digging of trenches and ditches, digging in rocky ground, etc. I have examined the machines very closely at these times. Within the last week I saw one of these machines in Military Park, Newark, New Jersey. All of the Defendant's machines, which I saw, contained the elements, or the equivalents thereof, of the Plaintiff's commercial and Byers machines and, in my opinion, contained the elements or the equivalents thereof, recited in the claims of the patents relied upon here. All of the Defendant's machines which I saw operated, operated precisely like and performed all of the important and most of the other functions of the machines of the patents in suit, the Plaintiff's machine and the machines of the two Byers Companies which were held to infringe by His Honor Judge Jones in the Cleveland case. In my opinion, the Defendant's General machines, the Plaintiff's commercial and the Byers' commercial machines are the same in substance. All are used for the same purpose and in competition with each other. I attach photographs marked Exhibits Nos. 7 to 22, inclusive, which I took myself of one of Defendant's machines, which photographs illustrate Defendant's machine in operation.

I am informed and believe that the machines illustrated in Exhibit 2, which I saw operating, were manu-

factured and sold by The General Excavator Company at Marion, Ohio. Name plates bearing the words "General Excavator Company, Marion, Ohio" were attached to the machines I saw and to which I refer. I am further informed and believe that The General Excavator Company is now manufacturing, advertising for sale and preparing to continue to manufacture and sell the machines illustrated in Exhibit 2, at Marion, Ohio.

The General Excavator Company, the Defendant herein, has been notified not only of its infringement of the patents, but of the opinion of Judge Jones and the decree entered in the Cleveland case. The Defendant, I am informed and believe, is threatening to continue to infringe said patents notwithstanding such notices.

Plaintiff developed the machines covered by the patents not only mechanically but commercially. Plaintiff built up the business in these machines from nothing to a large number over a period of years. During this development, the Plaintiff also developed the factory, sales and other organization facilities necessary to take care of the business in these machines. Infringement of this Defendant has contributed to the decline of the business of the Plaintiff in these machines and Plaintiff now finds itself with a surplusage of manufacturing, sales and other organization facilities which it will be unable to maintain and continue unless the infringement of the Defendant is abated. During the year before the infringement of the patents in suit became destructive of Plaintiff's sales, the Plaintiff made about Three Hundred Thousand Dollars ($300,000.00) on the patented machines and the handling machines which are sold with them. During 1928, this profit had been cut down to about Thirty Thousand Dollars ($30,000.00) by the infringers of whom the Defendant was and now is one. In addition to this loss of profits, Plaintiff has suffered damages from such infringement which it is difficult to estimate. Every time the Defendant sells an infringing machine, a new infringer is created in the user, whom it is difficult to pursue and from whom it is difficult to recover for the infringement. Other manufacturers, seeing the infringement of this Defendant, have been encouraged by Defendant's infringement and have also infringed the patents, and others undoubtedly will follow unless Defendant is enjoined. The present organization and equipment of the Plaintiff is more than ample to supply the demand of the public for these machines. Unless the infringement of the patents can be abated, the Plaintiff will be

obliged to reduce its establishment and organization on account of the infringing competition. On the other hand, as shown by its bulletins, the Defendant manufactures many other types of excavating machinery, which it can continue to make and sell even though enjoined from infringing the patents in suit. Issue of the preliminary injunction asked for will merely restore Defendant to its pre-infringing status.

The suit in Cleveland was instituted in December of 1926, was tried in 1927 before His Honor Judge Westenhaver, but due to Judge Westenhaver's sickness and death, the case was not decided until January, 1929, so that there has unfortunately and unavoidably already been unusual delay in proceeding to enforce the patents. Plaintiff has proceeded as fast as it could under the circumstances.

Unless the Preliminary Injunction here asked for is granted, the Plaintiff will suffer irreparable damages.

ROBERT REX DOWNIE.

Subscribed and sworn to before me this 7th day of February, 1919.

FLORENCE ANN KOFSKY,
Notary Public.

(Seal)

AFFIDAVIT OF PHILIP E. SIGGERS.

(Filed Feb. 9, 1929.)

[Case No. 964]

COUNTY OF CUYAHOGA,
STATE OF OHIO, SS.

Philip E. Siggers, being duly sworn, deposes and says that he is of counsel for the Keystone Driller Company, plaintiff in this case; that on April 11, 1928 he notified The General Excavator Company of Marion,

Ohio, defendant in this case, by letter, of its infringement of patents Nos. 1,317,431 and 1,511,114 and of the ownership of said patents by the plaintiff; that Exhibit 4 attached hereto is a true copy of the letter sent defendant on April 11, 1928; that defendant acknowledged in writing receipt of the notice; that on January 24, 1929, he notified defendant by letter which he deposited in the mails that day of the opinion of January 23, 1929 of the District Court of the United States for the Northern District of Ohio, Eastern Division sustaining the validity of claim 4 of patent No. 1,317,431, claims 1 to 14 inclusive of patent No. 1,511,114, and claims 1 to 10 inclusive of patent No. 1,543,250; that attached Exhibit 5 is a true copy of the notification of January 24, 1929; that said defendant, to his personal knowledge, was notified of its infringement of patents Nos. 1,317,431, 1,511,114 and 1,543,250 and also of the intention of the Keystone Driller Company to bring suit shortly and ask for preliminary injunction, said notification being by letter dated and mailed January 31, 1929 from the office of F. O. Richey, Cleveland, Ohio, also of counsel for plaintiff; that attached Exhibit 6 is a true copy of the notification of January 31, 1929; and that defendant, The General Excavator Company, has never, to his knowledge, offered to settle for past infringement, nor has it ceased its infringing acts but on the contrary it has continued to make offers to sell machines infringing claims held valid by decree of the District Court of the United States for the Northern District of Ohio, Eastern Division.

PHILIP E. SIGGERS.

Sworn to and subscribed before me this 7th day of February, 1929.

FLORENCE ANN KOFSKY,
Notary Public.

(Seal)

EXHIBIT 4.

Copy

April 11, 1928.

The General Excavator Company,
Marion, Ohio.

Re: File 1159—General Excavator

Gentlemen:—

This is to notify you formally of your infringement of the following patents owned by the Keystone Driller Company:

1,317,431, Clutter, September 30, 1919
1,511,114, Downie, October 7, 1924.

For some time the Keystone Driller Company has notified the public of its rights under the above patents by attaching to each of its machines metal plates bearing the dates (and recently the numbers also) of said patents, as well as of other patents owned by it. As a member of the public, you have thus received constructive notice of the rights of the Keystone Driller Company arising from the issue of the above-identified patents. Furthermore, Keystone Driller machines bearing patent notices have been exhibited at the Chicago road shows for a number of years past.

As you have been informed, the Keystone Driller Company is now prosecuting a suit for infringement of the above named patents against the Byers Machine Company in the United States District Court in Cleveland. It has also filed suits against the Bay City Dredge Works in the District Court in Bay City. Unless you are prepared to make an accounting for past infringement, or unless you enter into some amicable agreement with the Keystone Driller Company, a suit for infringement may be brought against you to recover profits or damages and to obtain injunctive relief.

A written response to this letter is requested.

Very truly yours,

(Signed) PHILIP E. SIGGERS.

PES:B

EXHIBIT 5.

Copy

January 24, 1929

The General Excavator Co.,
Marion, Ohio.

Re: File 1159

Gentlemen:—

We are writing merely to inform you of the decision of the District Court of the United States for the Northern District of Ohio, Eastern Division, at Cleveland, upholding the validity of the following claims of patents owned by the Keystone Driller Company:

Claim 4 of Clutter patent	1,317,431
Claims 6 and 7 of Wagner et al.	1,476,121

Claims 1-14 incl. of Downie	1,511,114
Claims 1-10 incl. of Downie	1,543,250

All of these claims were held to be infringed by Byers Machine Company. None of the claims sued on was held invalid.

A copy of the court's decision may be obtained from the clerk of the court at Cleveland, from this office or from the Keystone Driller Company, Beaver Falls, Pa.

Very truly yours,

PES:B (Signed) SIGGERS AND ADAMS.

EXHIBIT 6.

Copy

January 31, 1929.

General Excavator Company,
Marion, Ohio.

Gentlemen:—

This will follow the letter of January 24, 1929 written to you by Siggers & Adams from Washington, D. C., and is written in connection with that letter and also the letter of Philip E. Siggers of April 11, 1928 to you. This letter is, as those letters were, written at the direction of the Keystone Driller Company and is for the purpose of advising you that you are infringing the following patents owned by the Keystone Driller Company:

Clutter	No. 1,317,431
Downie	No. 1,511,114
Downie	No. 1,543,250

and further to advise you that we will shortly file a Bill of Complaint against you asking for preliminary injunction, enjoining you from infringing the above named patents which, as Siggers & Adams wrote you, have been sustained by His Honor Judge Jones in the United States District Court for the Northern District of Ohio, unless in the meantime you agree to discontinue your infringement and make suitable settlement for past infringement.

Very truly yours,

(Signed) F. O. RICHEY.

PRINTER'S NOTE:

There were attached to this affidavit sixteen photographs marked from Exhibit 7 to Exhibit 22 inclusive.

MOTION FOR PRELIMINARY INJUNCTION.

(Filed Feb. 9, 1929.)

[Case No. 964]

To the Honorable Judges of the United States District Court for the Northern District of Ohio, Western Division:

Now comes the Plaintiff, and moves this Court, on the Bill of Complaint, the affidavits of Robert Rex Downie and Philip E. Siggers and the records and exhibits, the pleadings, the opinion and the decree in the case of Keystone Driller Company vs. The Byers Machine Company and Byers Machine Company, which was instituted, pended, tried and decided in the Eastern Division of the Northern District of Ohio, for preliminary injunction restraining the Defendant, its confederates, associates, servants, attorneys, agents, clerks and workmen, as prayed for in the Bill of Complaint, from further infringing Letters Patent of the United States to Clutter, No. 1,317,431, Downie, 1,511,114 and Downie, 1,543,250, and for such other and further relief as may seem adequate to the Court.

Plaintiff shows in support of this motion that the title of the said patents as shown in the suit in the Eastern Division of the Northern District, is in the Plaintiff and that the said patents were sustained by His Honor Judge Paul Jones in the Eastern Division of the Northern District of Ohio, and that as shown by the affidavits of Robert Rex Downie and Phillip E. Siggers, and the bulletins of the Defendant filed with the Bill of Complaint, that the Defendant is infringing claims which were held valid in said case of the Plaintiff vs. The Byers Machine Company and Byers Machine Company as aforesaid.

Plaintiff files herewith an Order to Show Cause why this motion should not be granted and such injunction issued.

RICHEY & WATTS,
Solicitors for Plaintiff.

GEO. E. KIRK,
SIGGERS AND ADAMS,
Of Counsel for Plaintiff.

Toledo, Ohio, February 8, 1929.

ORDER TO SHOW CAUSE.

(Entered Feb. 9, 1929 by Geo. P. Hahn, Judge.)

[Case No. 964]

Upon reading the Bill of Complaint, now on file, and upon considering the affidavits of Robert Rex Downie and Phillip E. Siggers, and the exhibits referred to in the said affidavits and filed herein in support of this motion, and a copy of the opinion and decree of Judge Paul Jones in the case of the Keystone Driller Company vs. The Byers Machine Company and Byers Machine Company, it is ordered:

That the Defendant show cause, if any it has, before this Court, at a session thereof to be held in the City of Toledo, State of Ohio, on the 25th day of February, 1929, at 9:30 o'clock forenoon, or as soon thereafter as counsel can be heard, why a preliminary injunction should not issue pursuant to the prayer of said Bill of Complaint;

That copies of the said Bill of Complaint and of Plaintiff's motion papers and affidavits be served upon Defendant with this order;

That Defendant serve copies of all papers proposed to be used in opposition to the motion for a preliminary injunction upon Plaintiff's solicitors, Richey & Watts, 766 Union Trust Bldg., Cleveland, Ohio, by leaving said copies at said office or by mailing them by registered mail so as to reach said office at or before 4:00 P. M., February 18th, 1929;

And that Plaintiff serve copies of all papers in rebuttal upon Defendant, not later than the second day preceding the above named return day of this order;

That service of copies of this order and the attached affidavits upon counsel for Defendant on or before the 11th day of February, 1929, be deemed sufficient service.

GEO. P. HAHN,

United States District Judge.

Toledo, Ohio, February 9th, 1929.

ORDER MODIFYING THE DATES IN THE ORDER TO SHOW CAUSE.

(Entered Feb. 18, 1929 by Geo. P. Hahn, Judge.)

[Case No. 964]

It is hereby ordered that the Defendant's time for serving copies of all papers proposed to be used in opposition to the Motion for a Preliminary Injunction upon Plaintiff's solicitors, Richey & Watts, 766 Union Trust Bldg., Cleveland, Ohio, by leaving said copies at said office or mailing them by registered mail so as to reach said office, be extended to 4:00 P. M., February 25, 1929; the time for serving copies of Plaintiff's rebuttal papers be extended until March 5, 1929 and the hearing which is now set for the 25th day of February upon the Motion for a Preliminary Injunction be postponed until March 8, 1929.

GEO. P. HAHN,
United States District Judge.

We assent to the entry of the above order.

RICHEY & WATTS,
Solicitors for Plaintiff.

FRASER, HIETT, WALL & EFFLER,
Solicitors for Defendant.

ORDER EXTENDING TIME FOR SERVING COPIES OF ORDER.

(Entered Feb. 21, 1929 by Geo. P. Hahn, Judge.)

[Case No. 964]

It is hereby ordered that the defendant's time for serving copies of all papers proposed to be used in opposition to the motion for a preliminary injunction, upon plaintiff's solicitors, Richey & Watts, 766 Union Trust Building, Cleveland, Ohio, by leaving said copies at said

office or mailing them by registered mail so as to reach said office, be extended to 4:00 P. M. March 11, 1929; the time for serving copies of plaintiff's rebuttal papers be extended until March 19, 1929; and the hearing which is now set for the 28th day of March upon the motion for a preliminary injunction be postponed until March 22, 1929.

GEO. P. HAHN,
United States District Judge.

Dated February 20, 1929.

Approved as to form.
GEO. E. KIRK,
by WM. O. BALLARD.

DEFENDANT'S ANSWERS TO PLAINTIFF'S INTERROGATORIES.

(Filed Feb. 25, 1929.)

[Case No. 964]

Now comes the Defendant, by Edgar W. Barnhart, Plant Manager for the Defendant Company, and answers the Interrogatories propounded by the Plaintiff, as follows:

(1) Yes. (See answer to Interrogatory No. 4).
(2) Yes.
(3) Yes.
(4) No. Bulletin No. 2703 of Exhibit No. 1 was issued by the Defendant Company prior to the building of any backhoe or ditcher attachment and the sketch appearing in the upper right hand corner of page 11 of Exhibit 1 does not correctly represent any backhoe or ditcher attachment which has been built or sold by the Defendant Company.
(5) The General Excavator Company made, used and/or sold at Marion, Ohio, and elsewhere in the North-

ern District of Ohio, Western Division, between June 23, 1925 and February 7, 1929 the "backhoes" illustrated on pages one, two, nine, ten and eleven of bulletin 2805 and described on pages eight and nine of the same bulletin, which is Exhibit 2; the sketch shown in the upper right hand corner of page nineteen of said Bulletin 2805 illustrates the general construction of the backhoe attachment sold by The General Excavator Company but is not a scale drawing and cannot be relied upon as correctly illustrating the details and dimensions of said backhoe attachment.

(6) Yes.

STATE OF OHIO,
COUNTY OF MARION, SS.

Edgar W. Barnhart, being duly sworn, says that he is Plant Manager of The General Excavator Company, the Defendant in the above entitled cause; that he has personal knowledge of the facts set forth in the foregoing answers to Plaintiff's Interrogatories and that said answers are true to his own knowledge.

EDGAR W. BARNHART.

Subscribed and sworn to before me, a notary public, on this 21st day of February, 1929.

CARROLL B. KERR,

(Seal) *Notary Public in and for Marion County, State of Ohio.*

STIPULATION EXTENDING TIME TO ANSWER.

(Filed Feb. 28, 1929.)

[Case No. 964]

It is hereby stipulated by and between counsel for the respective parties to the above entitled cause, subject to the approval of the Court, that the time within which

defendant may file its answer to the bill of complaint be and the same hereby is extended for thirty (30) days from the date now set, that is to and including the 30th day of March, 1929.

RICHEY & WATTS,
Solicitors for Plaintiff.
EDWARD L. REED,
Solicitor for Defendant.

It is so ordered:

GEO. P. HAHN, *Judge.*
February 28, 1929.

ORDER MODIFYING DATES IN ORDER TO SHOW CAUSE.

(Entered March 9, 1929, by Geo. P. Hahn, Judge.)

[Case No. 964]

Upon application of the defendant it is hereby ordered that the defendant's time for serving copies of all papers proposed to be used in opposition to the motion for a preliminary injunction, upon plaintiff's solicitors, Richey & Watts, 766 Union Trust Building, Cleveland, Ohio, by leaving said copies at said office or mailing them by registered mail so as to reach said office, be extended to 4:00 P. M., March 25, 1929; the time for serving copies of plaintiff's rebuttal papers be extended until April 2, 1929; and the hearing which is now set for the 28th day of March upon the motion for a preliminary injunction be postponed until April 8, 1929.

GEO. P. HAHN,
United States District Judge.

Dated March 9, 1929.

Approved as to form:

GEO. E. KIRK,
By WM. O. BALLARD.

STIPULATION EXTENDING TIME FOR FILING PAPERS.

(Filed March 28, 1929.)

[Case No. 964]

It is stipulated by and between the parties hereto that the time now running for Plaintiff to serve rebuttal papers be extended from April 2, 1929, to April 16, 1929, and that the hearing on Motion for Preliminary Injunction now set for April 8, 1929, be set for April 22, 1929.

GEO. E. KIRK,
Of Counsel for Plaintiff.

FRASER, HIETT, WALL & EFFLER,
Of Counsel for Defendant.

Toledo, Ohio, March 28, 1929.

ORDER MODIFYING DATES IN ORDER TO SHOW CAUSE.

(Entered March 28, 1929, by Geo. P. Hahn, Judge.)

[Case No. 964]

It is hereby ordered that the plaintiff's time for serving copies of rebuttal papers proposed to be used in the matter of the motion for a preliminary injunction be extended from April 2, 1929, to April 16, 1929, and the hearing which is now set for the 8th of April, 1929, upon the motion for a preliminary injunction be postponed until April 22, 1929.

GEO. P. HAHN,
United States District Judge.

March 28, 1929.

Approved as to form:

FRASER, HIETT, WALL & EFFLER,
Of Counsel for Defendant.

DEFENDANT'S ANSWER.

(Filed Mar. 29, 1929.)

[Case No. 964]

The answer of the defendant, The General Excavator Company, to the bill of complaint herein.

This defendant, now and at all times hereafter, saving and reserving to itself all and all manner of benefit and advantage of exception or otherwise that can or may be had or taken to the manifold errors, uncertainties, imperfections and insufficiencies in said bill of complaint contained, for answer thereto, or unto so much and such parts thereof as it is advised it is material for it to make answer to, answering, says:

1. Defendant denies each and every allegation in said bill of complaint contained, except such as are hereinafter admitted or specifically answered or denied.

2. Defendant leaves plaintiff to make such proof of the allegations contained in paragraph I of the bill of complaint as it may deem proper.

3. Defendant admits that this cause is based on the alleged infringement of United States patents and that defendant is an inhabitant of the State of Ohio, in the Northern District of Ohio, Western Division, where it has a place of business, but denies that it has committed acts of infringement in said district or elsewhere.

4. Defendant admits that United States patent No. 1,317,431 was issued to LeRoy P. Clutter on an application filed on February 11, 1915, for alleged improvements in Ditching and Excavating Machines, as set forth in paragraphs III and IV of said bill of complaint, but denies that, on or prior to February 11, 1915, said LeRoy P. Clutter was the original, first and true inventor of the alleged improvements in Ditching and Excavating Machines set forth in said patent; denies that said alleged improvements were not known or used by others in this country before his invention or discovery thereof; denies that said alleged improvements were not patented or described in any publication in this or any foreign country before his invention or discovery thereof or more than two years prior to said application for patent; denies that said alleged improvements were not in public use or on sale in the United States for more than two years prior to said application; denies that said alleged improvements were not abandoned prior to said applica-

tion; denies that in securing said patent said Clutter complied in all respects with the conditions and requirements of the then existing laws of the United States; denies that said patent was issued in due form of law and in accordance with all requirements of the law; and denies the remaining allegations of said paragraphs.

5. Defendant is not informed regarding the alleged assignment of said patent No. 1,317,431 by said Clutter to the plaintiff, as set forth in paragraph V of said bill of complaint, and therefore denies the same and demands strict proof thereof.

6. Defendant admits that United States patent No. 1,511,114, for alleged improvements in Excavating Machines, was issued to the plaintiff on an application filed by Robert Rex Downie on June 27, 1921, as set forth in paragraphs VI and VIII of said bill of complaint, but denies that said Robert Rex Downie was at the time of the filing of said application, or prior thereto, the original, first and true inventor of the alleged improvements in Excavating Machines set forth in said patent No. 1,511,114, or any part thereof; denies that said alleged improvements were not known or used by others in this country before his invention or discovery thereof; denies that said alleged improvements were not patented or described in any printed publication in this or any foreign country before his invention or discovery thereof or more than two years prior to said application for United States patent; denies that said alleged improvements were not in public use or on sale in the United States for more than two years prior to said application; denies that said improvements were not abandoned to the public; denies that in securing said patent said Robert Rex Downie and plaintiff complied in all respects with the conditions and requirements of the then existing laws of the United States; denies that said Letters Patent were issued in due form of law and in accordance with all requirements of law; and denies the remaining allegations of said paragraphs.

7. Defendant is not informed as to the execution or sufficiency of the alleged assignment by Robert Rex Downie to the plaintiff, of said invention, as set forth in paragraph VII of said bill of complaint, and therefore denies the same and demands strict proof thereof.

8. Defendant admits that Letters Patent of the United States No. 1,543,250, for alleged improvements in

Excavating Machines, were issued on the 23rd day of June, 1925 to the plaintiff on an application of Robert Rex Downie filed January 8, 1925; as set forth in paragraphs IX and XI of the bill of complaint, but denies that said Robert Rex Downie was, at the time of the filing of said application for patent, or prior thereto, the original, first and true inventor of the alleged improvements set forth in said patent No. 1,543,250, or any part thereof; denies that said alleged improvements were not known or used by others in this country before his invention or discovery thereof; denies that said improvements were not patented or described in any printed publication in this or any foreign country before his invention or discovery thereof or more than two years prior to said application for patent; denies that said alleged improvements were not in public use or on sale in the United States for more than two years prior to said application; denies that said alleged improvements were not abandoned to the public; denies that in the securing of said patent said Robert Rex Downie and plaintiff complied in all respects with the then existing laws of the United States; denies that said Letters Patent were issued in due form of law and in accordance with all the requirements of law; and denies the remaining allegations of said paragraphs.

9. Defendant is not informed as to the execution or sufficiency of the alleged assignment by said Downie to the plaintiff, of the alleged invention embodied in said application of January 8, 1925, as set forth in paragraph X of said bill of complaint, and therefore denies the same and demands strict proof thereof.

10. Defendant, answering paragraph XII of the bill of complaint, says that it is not informed as to whether or not plaintiff at any time became, or was at the time of filing said bill of complaint, the sole owner of said patents Nos. 1,317,431, 1,511,114, and 1,543,250, or of any rights thereunder, and therefore denies the same and demands strict proof thereof.

11. Defendant, answering paragraph XIII of the bill of complaint, admits that plaintiff is engaged in the manufacture and sale of excavating machines, but says it is not informed as to whether or not said excavating machines embody the inventions of the aforesaid patents, or any part thereof, or as to whether or not said alleged inventions, or any of them, are of great utility and value or have come extensively into public use with substantial

benefits to the public and to the plaintiff, or whether or not plaintiff has been to large effort and expense in and about said inventions for the purpose of introducing them into use and supplying embodiments thereof, and therefore denies the same; and denies that the business of the plaintiff in this connection is now threatened with irreparable injury, or any injury, by any act of the defendant.

12. Defendant, answering paragraph XIV of the bill of complaint, admits that suit was brought by the plaintiff herein against the Byers Machine Company but says that it is not informed as to the several allegations relating thereto and in said paragraph contained, and therefore denies the same, and denies that the decree attached to the bill of complaint is a true copy of the decree entered in said case.

13. Defendant, answering paragraph XV of the bill of complaint, denies that it has, since the issuance of patents Nos. 1,317,431, 1,511,114 and 1,543,250, or any of them, and since the alleged title to and rights under said patents, or any of them, were acquired by plaintiff, and within six years next preceding the filing of this bill of complaint, or at any other time, in defiance of said patents, or any of them, or in defiance of plaintiff's rights thereunder, made and/or caused to be made, or has used or sold, or is now making, using or selling within the Northern District of Ohio, Western Division, or elsewhere, Excavating Machines embodying the aforesaid alleged inventions and in infringement of the aforesaid patents, or any of them.

14. Defendant, answering paragraph XVI of said bill of complaint, denies that it has derived or is deriving any unlawful gains or profits from such alleged infringement; denies that plaintiff has suffered and is threatened with irreparable damage, or any damage, by reason of such alleged infringement; denies that it threatens to do or to continue any act in violation of any right which plaintiff may have under said patents, or any of them; denies that any act by it has impaired plaintiff's enjoyment of any exclusive right or privilege granted to the plaintiff by the issuance of said Letters Patent, or any of them; and denies that it has unjustly deprived plaintiff of any profit which it would have realized or enjoyed from said alleged inventions except for such alleged infringement.

15. Defendant, answering paragraph XVII of the bill of complaint, denies that the aforesaid patents are susceptible of conjoint embodiment and use in one and the same construction; and denies that they have been so conjointly embodied and used in the machines made and sold by the defendant.

16. Defendant, answering paragraph XVIII of the bill of complaint, says that it is not informed as to whether or not plaintiff has given notice to the public that its machines are patented by affixing thereon the word "Patented" together with the date and year each of the aforesaid patents were granted, and therefore denies the same.

17. Defendant, further answering, denies that the subject matter attempted to be claimed and covered by the patents sued on, or any of them, constitutes patentable subject matter or involves any act of invention, and avers that the subjects matter of said patents, and of each of them, embodies nothing more than the work of a mechanic in selecting and putting together the most desirable parts of machines well known in the art prior to the respective applications for said patents.

18. Defendant, further answering, avers that said Letters Patent sued on, and each of them, are null and void because the alleged inventors thereof were not the original, and first inventors or discoverers of the alleged improvements embraced in the respective patents, or any material and substantial part thereof, but that the said alleged improvements and each of them, were invented by others before the alleged dates of invention by said Clutter and said Downie.

19. Defendant, further answering, avers that the Letters Patent sued on, and each of them, and all the claims in suit, are null and void because the alleged inventions or discoveries embodied in said patents, and each of them, and attempted to be covered thereby, or the material and substantial parts thereof, had, prior to the alleged inventions thereof by said patentees, LeRoy P. Clutter and Robert Rex Downie, been described, disclosed, illustrated, published and patented by various persons as set forth in the following Letters Patent:

Number	*Inventor.*	*Date*
77,949	Barnes	May 19, 1868
386,438	Rood	July 17, 1888
418,311	Cross	Dec. 31, 1889

427,260	Forter	May 6, 1890
496,428	Morgan	May 2, 1893
519,835	Butler	May 15, 1894
629,695	Knight	July 25, 1899
670,210	Shannon	Mar. 19, 1901
711,449	Williams	Oct. 14, 1902
716,538	Harrison	Dec. 23, 1902
745,329	Coffey	Dec. 1, 1903
806,288	Pugh	Dec. 5, 1905
808,345	Cross	Dec. 26, 1905
876,517	Bendick	Jan. 14, 1908
892,508	Fairbanks	July 7, 1908
1,056,268	Fairbanks	Mar. 18, 1913
1,100,864	Bishop	June 23, 1914
1,194,204	Mahoney	Aug. 8, 1916
1,237,878	Downie	Aug. 21, 1917
1,237,879	Downie	Aug. 21, 1917
1,249,805	Morison et al.	Dec. 11, 1917
1,281,379	Hudson	Oct. 15, 1918
1,283,460	Bentson	Nov. 5, 1918
1,289,395	Clutter	Dec. 31, 1918
1,315,512	Keith	Sep. 9, 1919
1,316,058	Pugh	Sep. 16, 1919
1,317,431	Clutter	Sep. 30, 1919
1,322,570	Hoar	Nov. 25, 1919
1,385,322	Hoffmeyer	July 19, 1921
Re. 15,685	Hoar	Sep. 18, 1923
1,476,121	Wagner et al.	Dec. 4, 1923
1,485,198	Pugh	Feb. 26, 1924
1,503,813	Burke	Aug. 5, 1924
1,515,783	Luce	Nov. 18, 1924
1,562,288	Burke	Nov. 17, 1925

Defendant begs leave to insert herein, by way of amendment, the names and dates of other prior patents or publications and suitable information in connection with prior users, as such patents, publications and information may be discovered and promptly pleaded herein by way of amended answer.

20. Defendant, further answering, avers that the Letters Patent sued on, and each of them, are null and void, because prior to the alleged inventions of said LeRoy P. Clutter and said Robert Rex Downie, respectively, the alleged improvements described and claimed in said patents, or the material and substantial parts thereof, were known and used by the following named persons at the following named places, to wit:

Daniel H. Mahoney, now of North Bend, Ohio, at Vincennes, Indiana, and elsewhere.

E. O. Rood, deceased, and Charles W. Rood, of Orlando, Florida.

21. Defendant, further answering, avers that plaintiff has been guilty of laches in instituting this suit; that plaintiff has had knowledge of its alleged rights and has had ample opportunity to establish them in the proper forum; that by reason of its delay defendant has had good reason to believe that the alleged rights were worthless or abandoned; and that in consequence thereof defendant invested large sums in its business and has established a substantial trade in the excavating machines involved herein, and that because of this change in condition during this period of delay it would be an injustice to permit plaintiff to now assert these alleged rights; wherefore defendant prays that this suit be dismissed.

22. Defendant, further answering, denies that it has in any way or in any manner trespassed upon the plaintiff's lawful rights in the premises, and denies that the plaintiff is entitled to any relief against defendant by way of injunction or otherwise or to any accounting or any other equitable relief against it.

All of which matters and things defendant will maintain and prove and prays to be hence dismissed with its reasonable costs sustained.

EDWARD L. REED,
Solicitor for Defendant.

HAROLD W. FRASER,
Of Counsel.

STIPULATION RE USE OF UNCERTIFIED COPIES OF PATENTS ETC. AT TRIAL.

(Filed April 15, 1929.)

[Case No. 964]

It is hereby stipulated and agreed by the parties to the above suit as follows:

(1) The Plaintiff is a Pennsylvania corporation, having its principal place of business at Beaver Falls, Pennsylvania, and a citizen and inhabitant of said State as pleaded in the Bill of Complaint.

(2) Uncertified printed copies of United States or foreign patents (and where printed copies cannot conveniently be secured, uncertified photostatic or similar copies of United States and foreign patents) may be used with the same force and effect in this case as original or certified copies.

(3) Uncertified copies of publications may be accepted in the above entitled case with the same force and effect as certified copies, or the originals, and the dates of the issue and publication of said publications appearing thereon will be accepted as correct, subject to correction if error occur. Each side agrees to furnish the other with copies of publications which it relies upon and to advise the other where the originals may be found.

(4) Exhibits offered in the case may be retained in the possession of the party first producing them subject to inspection by the other party, or the counsel of the other party, upon reasonable notice to the party retaining the exhibits. Such exhibits, however, shall be filed prior to the final hearing in the case or shall be filed at any time therebefore upon the request of opposing counsel.

(5) Each party agrees to furnish copies of all depositions taken by such party in the case to the other party without charge.

RICHEY & WATTS,
Attorneys for Plaintiff.

EDWARD L. REED,
Attorney for Defendant.

Dayton, Ohio, April 8, 1929.
Cleveland, Ohio, April 13, 1929.

MEMORANDUM OPINION OF COURT UPON MOTION FOR PRELIMINARY INJUNCTION.

(Filed April 25, 1929.)

[Case No. 964]

HAHN, *J.*:

We have heard extended arguments of counsel urging that a temporary injunction be granted in this proceeding enjoining the defendant from using the patents involved in this litigation pending final hearing. We have read the briefs and the affidavits submitted. Our analysis of the situation would not be of any value to counsel who are thoroughly familiar with the case.

Our conclusion is that, while plaintiff has sustained its patents as against the defenses of an alleged impecunious infringer in a suit which was decided in its favor by Judge Paul Jones, the defendant here is in good faith pressing new defenses which, to say the least, seem to have merit enough to prevent the application of the rule permitting a temporary injunction to plaintiff merely because of the prior adjudication in its favor. Accordingly, we think that, having in mind the decisions of our Circuit Court of Appeals, particularly *Toledo Plate & Window Glass Co., v. Kawneer Mfg. Co.*, 262 Fed. 510, and cases therein cited, the proper course to pursue in this matter is to deny the motion for a temporary injunction, upon condition that the defendant file in this action an appropriate bond payable to the plaintiff, and covering damages which may accrue to the plaintiff from and after the 22nd day of April, 1929. If counsel cannot agree upon the amount of the bond, the court will hear further from counsel. If the defendant refuses to put up a bond, then the plaintiff may have a temporary injunction on giving the usual bond. If counsel cannot agree upon the amount of such bond, the matter may be further submitted to the court.

GEO. P. HAHN,
Judge.

April 25, 1929.

ORDER DENYING MOTION FOR PRELIMINARY INJUNCTION.

(Entered June 12, 1929 by Geo. P. Hahn, Judge.)

[Case No. 964]

The plaintiff's motion for preliminary injunction in the above-entitled cause having come on to be heard on the 22nd day of April, 1929, upon affidavits and exhibits filed by the plaintiff and the defendant, and having been argued by counsel for the respective parties, and the Court having fully considered the same, it is hereby,

ORDERED, that the said motion for a preliminary injunction be and the same hereby is denied; upon condition that the defendant give to the plaintiff a bond in the sum of Fifteen Thousand ($15,000.00) Dollars conditioned for the payment of all profits or damages that may be decreed against the defendant in this cause for the infringement of the patents sued on (between the date of this order and the final decree); and it is further Ordered that if the defendant refuses to put up a bond, then the plaintiff may have a temporary injunction on giving the usual bond.

GEO. P. HAHN,

June 12, 1929. *United States District Judge.*

Approved as to form June 8, 1929.

EDWARD L. REED,

Attorney for Defendant.

BOND OF DEFENDANT FOR $15,000, IN LIEU OF PRELIMINARY INJUNCTION.

(Filed June 12, 1929.)

[Case No. 964]

UNITED STATES OF AMERICA,
NORTHERN DISTRICT OF OHIO,
WESTERN DIVISION, SS.:

KNOW ALL MEN BY THESE PRESENTS, that we, The General Excavator Company, of Marion in the County of Marion, and State of Ohio, as principal, and Ameri-

can Surety Company of New York of the City of New York and State of New York, as surety, are held and firmly bound unto Keystone Driller Company in the sum of Fifteen Thousand ($15,000.00) Dollars, lawful money of the United States, to be paid to said Keystone Driller Company, its successors or assigns; to which payment, well and truly to be made, we bind ourselves and each of us, jointly and severally, and each of our successors and assigns, by these presents.

Sealed with our seals and dated this 10th day of June, 1929.

WHEREAS, the above named Keystone Driller Company, plaintiff in this cause, has presented to the court its motion for a preliminary injunction, which motion has been denied upon the condition that defendant, The General Excavator Company, file in this cause an appropriate bond payable to the plaintiff, and covering damages which may accrue to the plaintiff from and after the 22nd day of April, 1929.

NOW, THEREFORE, the condition of this obligation is such that, if the said The General Excavator Company shall pay to said Keystone Driller Company all profits or damages which may be decreed against said The General Excavator Company, in this cause, for infringement of the patents included in the bill of complaint in said cause between the 22nd day of April, 1929, and the date of the final decree in said cause, then these presents and this obligation shall be void; otherwise they shall remain in full force and effect.

THE GENERAL EXCAVATOR COMPANY,
By C. A. OWENS,
Secretary.

AMERICAN SURETY COMPANY OF NEW YORK,
By FRED J. KINSEY,
Resident Vice President,
Attest: J. M. SCHRADER,
Resident Asst. Secretary
at Toledo, Ohio.
(Surety Co. Seal)

Approved: GEO. P. HAHN,
United States District Judge.

STIPULATION IN RE TIME FOR TAKING DEPOSITIONS.

(Filed June 13, 1929.)

[Case No. 964]

It is hereby stipulated and agreed by and between counsel for the respective parties, subject to the approval and order of the Court, that the time for taking depositions of the parties under the provisions of Rule 47, shall be and the same hereby is extended as follows: The time for plaintiff's depositions to close on August 23, 1929 and the time for defendant's depositions to close on September 22, 1929, and the time for rebutting depositions by either party to close on October 12, 1929.

PHILIP E. SIGGERS,

June 10, 1929. *Attorney for Plaintiff.*

EDWARD L. REED,

June 12, 1929. *Attorney for Defendant.*

SUPPLEMENTAL BILL OF COMPLAINT.

(Filed Aug. 9, 1929.)

[Case No. 964]

To the Honorable, the Judges of the District Court of the United States for the Northern District of Ohio, Western Division:

Keystone Driller Company, a corporation of the State of Pennsylvania, having its principal place of business at Beaver Falls, Pennsylvania, presents the following Supplemental Bill of Complaint against The General Excavator Company, a corporation organized and existing under the laws of the State of Ohio, and having a regular and established place of business at Marion, Marion County, Ohio, and thereupon plaintiff complains and alleges:

(I) That on February 9, 1929, Keystone Driller Company, Plaintiff, exhibited its original Bill of Complaint to this Honorable Court against The General Excavator Company in which Plaintiff stated that the Defendant was infringing, and threatening infringement of, Letters Patent of the United States, Nos. 1,317,431, 1,511,114 and 1,543,250 and seeking relief from such infringement and threatened infringement.

(II) That said Bill of Complaint recited the invention by LeRoy P. Clutter and Robert Rex Downie of certain new and useful improvements in excavating machines and of the filing of applications thereon for United States patents named above which subsequently issued therefrom the infringement and threatened infringement thereof by The General Excavator Company, and other matters as set forth in said Bill of Complaint.

(III) That subsequent to the filing of said Bill of Complaint there has issued to the Plaintiff, Keystone Driller Company, United States Patents Nos. 1,709,466 and 1,716,432, infringement and threatened infringement by The General Excavator Company of which is complained of in this Supplemental Bill of Complaint.

(IV) On and prior to January 3, 1927, Robert Rex Downie, a citizen of the United States, then residing at Beaver Falls, Pennsylvania, was the original, first and true inventor of new and useful improvements in Ditcher Scoop Assembly, not known or used by others in this country before his invention or discovery thereof, and not patented or described in any printed publication in this or any foreign country before his invention or discovery thereof or more than two years prior to his hereinafter mentioned application for patent therefor in the United States, and not in public use or on sale in the United States for more than two years prior to said application, and not by him abandoned to the public, and not first patented or caused to be patented by him or his legal representatives or assigns, in any foreign country upon an application filed more than twelve months prior to the filing of said application in the United States. So being the original, first and true inventor, as aforesaid, said Robert Rex Downie, on January 3, 1927, made application to the Commissioner of Patents of the United States for a patent for his said invention, in accordance with the then existing laws of the United States, and complied in all respects with the conditions and requirements of said laws.

(V) For good and valuable consideration, by an instrument in writing executed and recorded in the Patent Office before the grant of a patent on his said application of January 3, 1927, the said Robert Rex Downie assigned to plaintiff the whole right, title and interest in and to his said invention and authorized the Commissioner of Patents to issue the patent for said invention to the plaintiff.

(VI) Upon said application of Robert Rex Downie, and pursuant to his said assignment to plaintiff, due proceedings were had, in accordance with all requirements of law, such that on April 16, 1929, United States patent No. 1,709,466, signed, sealed and executed in due form of law, was issued to plaintiff for said invention or improvements in Ditcher Scoop Assembly. And plaintiff brings here into court a copy of said patent No. 1,709,466 and prays that the same may be taken as part of this Bill of Complaint.

(VII) On and prior to May 22, 1926, Robert Rex Downie, a citizen of the United States, then residing at Beaver Falls, Pennsylvania, was the original, first and true inventor of certain new and useful improvements in Excavating Scoop, not known or used by others in this country before his invention or discovery thereof, not patented or described in any printed publication in this or any foreign country before his invention or discovery thereof or more than two years prior to his hereinafter mentioned application for patent therefor in the United States, and not in public use or on sale in the United States for more than two years prior to said application, and not by him abandoned to the public, and not first patented or caused to be patented by him or his legal representatives or assigns in any foreign country upon an application filed more than twelve months prior to the filing of said application in the United States. So being the original, first and true inventor, as aforesaid, said Robert Rex Downie, on May 22, 1926, made application to the Commissioner of Patents of the United States for a patent on his said invention, in accordance with the then existing laws of the United States, and complied in all respects with said laws.

(VIII) For good and valuable consideration by an instrument in writing executed and recorded in the Patent Office before the grant of a patent on his said application of May 22, 1926, the said Robert Rex Downie assigned to plaintiff the whole right, title and interest in and to his said invention set forth in the application last

mentioned, and authorized the Commissioner of Patents to issue the patent therefor to the plaintiff.

(IX) Upon said Robert Rex Downie's said application of May 22, 1926, and pursuant to his assignment to plaintiff of the invention described therein, due proceedings were had, in accordance with all requirements of law, such that on June 11, 1929, United States Patent No. 1,716,432, signed, sealed and executed in due form of law, was issued to plaintiff for said invention or improvements in Excavating Scoop. And plaintiff brings here into court a copy of said Patent No. 1,716,432 and prays that the same may be taken as part of this Bill of Complaint.

(X) By reason of the premises, prior to the filing of this Bill of Complaint, and prior to the acts of infringement hereinafter complained of, plaintiff became and has ever since remained and now is the sole owner of said patents Nos. 1,709,466 and 1,716,432 and of all rights thereunder.

(XI) Under the protection of the aforesaid patents, plaintiff is engaged in the manufacture and sale of Excavating Machines embodying said inventions. Said inventions of said patents and each of them are of great utility and value, and have come extensively into public use, with substantial benefits to the public and to the plaintiff. The plaintiff has been to large effort and expense in and about said inventions for the purpose of introducing them into use and supplying embodiments thereof. Its business in this connection is now threatened with irreparable injury by the acts of defendant hereinafter complained of.

(XII) Since the respective dates of issue of said patents Nos. 1,709,466 and 1,716,432 and since the plaintiff acquired its title to and rights under said patents as hereinbefore recited, and within six years next preceding the filing of this Bill of Complaint, and without leave of or license from plaintiff, and in defiance of said patents and each of them and of plaintiff's rights thereunder, the said The General Excavator Company has made and/or caused to be made and has used and has sold, and is now making, using and selling, within said Northern District of Ohio, Western Division, and elsewhere within the United States of America, numerous excavating machines embodying the inventions described and claimed in and patented by said patents Nos. 1,709,466 and 1,716,432, and each of them, in infringement of said patents and

each of them, and defendant threatens to continue to infringe each of said patents.

(XIII) Defendant has derived and continues to derive unlawful gains and profits from said infringement, and plaintiff has suffered and is threatened with irreparable damage by reason of said infringement. Defendant threatens to continue all of said acts above complained of. Defendant by its acts aforesaid has impaired plaintiff's enjoyment of its exclusive rights and privileges granted upon issue of said letters patent, and each of them, and has unjustly deprived plaintiff of large profits, which it would have realized and enjoyed from said inventions except for defendant's infringement.

(XIV) The inventions of the aforesaid patents are susceptible of conjoint embodiment and use in one and the same construction both with each other and with the inventions of the patents set forth in the original Bill of Complaint, and have been so conjointly embodied and used in the machines made and sold by defendant as aforesaid.

(XV) Plaintiff has specially notified defendant of each of said patents and of plaintiff's ownership thereof and of the infringements complained of, but said defendant has continued and will unless restrained continue its acts complained of notwithstanding and in spite of said notice.

WHEREFORE plaintiff prays:

(a) That the defendant, The General Excavator Company, be directed to appear and answer this Bill of Complaint (but not under oath, answer under oath being expressly waived), and to abide by and perform such orders and decrees as the court may deem proper.

(b) That the defendant, The General Excavator Company, and its officers, agents, servants, employees, and all persons in privity with them and each of them, be enjoined and restrained *pendente lite*, by decree and injunction of this court, from directly or contributorily infringing plaintiff's said patents Nos. 1,709,466 and 1,716,432, and each of them and from threatening to infringe the same.

(c) That the defendant, The General Excavator Company, and its officers, agents, servants, employees, and all persons in privity with them, and each of them, be enjoined and restrained perpetually,

by decree and injunction of this court, from directly or contributorily infringing plaintiff's said patents Nos. 1,709,466 and 1,716,432 and each of them and from threatening to infringe the same.

(d) That the defendant, The General Excavator Company, be required to account to plaintiff for the profits realized by defendant and the damages to plaintiff in the premises; and that this cause be referred to a Master to take an accounting of said profits and damages; and that such damages be increased to three times the amount thereof or as to the Court may seem meet in view of all the circumstances.

(e) That said defendant be decreed to pay the costs and disbursements of this suit to be taxed.

(f) And that plaintiff have such other and further relief as to the court may seem meet.

KEYSTONE DRILLER COMPANY,
ROBERT REX DOWNIE,
Secretary.

RICHEY & WATTS, *Solicitor,*
P. E. SIGGERS, *Solicitor,*
Of Counsel.

Verification.

STATE OF PENNSYLVANIA,
COUNTY OF BEAVER, SS.

Robert Rex Downie, being duly sworn, deposes and says that he is Secretary of the corporation, Keystone Driller Company, the plaintiff named in the foregoing Supplemental Bill of Complaint; that he has read this Bill; that insofar as the statements contained in this Bill are within his knowledge they are true, and so far as they are derived from information and belief, he verily believes them to be true.

ROBERT REX DOWNIE.

Subscribed and sworn to before me this 5th day of Aug., 1929.

CHAS. THEO. SMITH,
(Seal) *Notary Public.*

Commission expires March 13, 1931.

Service of Copy accepted this 9th day of August, 1929.

H. W. FRASER,
Of Counsel for Defendant.

PRINTER'S NOTE:

Copies of U. S. Patents Nos. 1,709,466 and 1,716,432 to R. R. Downie were attached to this Supplemental Bill of Complaint but same have been omitted at this point as they are also a part of Defendant's Exhibit No. 62, Book of Patents.

ORDER GRANTING LEAVE TO FILE SUPPLEMENTAL BILL OF COMPLAINT.

(Entered August 23, 1929, by S. H. West, Judge.)

[Case No. 964]

It is hereby ordered that the plaintiff be permitted to file its Supplemental Bill of Complaint with respect to United States Letters Patents to Downie, Nos. 1,709,466 and 1,716,432. Defendant's time to answer shall run from the date on which this order is entered.

S. H. WEST,
United States District Judge.

Signed by Judge West at Cleveland, O., 8/22/29.

F.O.R.

We assent to the entry of the above Order.

RICHEY & WATTS,
Counsel for Plaintiff.

EDWARD L. REED,
Counsel for Defendant.

Aug. 21, 1929.

ORDER ALLOWING DEFENDANT EXTENSION OF TIME TO ANSWER SUPPLEMENTAL BILL OF COMPLAINT.

(Entered Sept. 9, 1929, by Geo. P. Hahn, Judge.)

[Case No. 964]

It is hereby ordered that the time within which the defendant may answer the supplemental bill of complaint herein be, and the same hereby is, extended for thirty days, that is, to and including the 11th day of October, 1929.

GEO. P. HAHN,
District Judge.

ORDER PERMITTING THE GENERAL EXCAVATOR COMPANY AND THE OSGOOD COMPANY TO TAKE DEPOSITIONS.

(Entered Sept. 9, 1929, by Geo. P. Hahn, Judge.)

[Case No. 964]

It is hereby ordered:

1. That The General Excavator Company, and The Osgood Company, defendants in Equity Cases 964 and 965, respectively, now pending in this Court, may take jointly any and all depositions allowed by statute or the United States Equity Rules, such depositions so taken to be entitled in both of said cases, and a separate copy of any and all depositions so taken, with exhibits, to be filed in each case, provided that when the original ink copy of any said depositions and original Exhibits are filed in one case a carbon copy of said depositions and copies of said original Exhibit may be filed in the other case subject to comparison with the original deposition and original exhibits and subject to correction if any error or discrepancy be found.

2. That any and all depositions so taken may be read on the trial of either or both of said cases the same as if the said depositions had been taken by the defendants separately, subject to all exceptions for relevancy.

3. That the said defendants shall serve separate notices of taking testimony upon the Keystone Driller Company or its attorneys and that a separate certificate shall be filed with each deposition in each case by the officer before whom such deposition is taken.

4. That at the taking of said depositions the witnesses may be examined by the attorney for either defendant on behalf of the other defendant, or the attorney for each defendant may examine the witnesses separately as they so desire.

5. That a copy of this order be filed in each of said cases.

GEO. P. HAHN,
District Judge.

STIPULATION RE DEPOSITIONS.

(Filed Sept. 30, 1929.)

[Case No. 964]

It is hereby stipulated by and between Counsel for the respective parties, the Honorable Court consenting, that defendant's time for taking original depositions under the provisions of Equity Rule 47 shall be, and hereby is, extended to and including October 26, 1929, and both parties' times for taking rebutting depositions is extended accordingly.

RICHEY & WATTS,
Attorneys for Plaintiff.

September 27, 1929.

EDWARD L. REED,
Attorney for Defendant.

September 26, 1929.

ANSWER TO SUPPLEMENTAL BILL OF COMPLAINT.

(Filed Oct. 10, 1929.)

[Case No. 964]

The answer of the defendant, The General Excavator Company, to the supplemental bill of complaint herein.

This defendant, now and at all times hereafter, saving and reserving unto itself all and all manner and benefit and advantage of exception, or otherwise, that can or may be had or taken to the manifold errors, uncertainties, imperfections, and insufficiencies in said supplemental bill of complaint contained, for answer thereto, or unto so much and such parts thereof as it is advised it is material for it to make answer to, answering says:

1. Defendant denies each and every allegation in said supplemental bill of complaint, except such as are hereinafter admitted or specifically answered.

2. Defendant admits that the plaintiff filed its original bill of complaint in this case as set forth in paragraphs I and II of said supplemental bill of complaint.

3. Defendant admits that patents Nos. 1,709,466 and 1,716,432 were issued to the plaintiff herein.

4. Defendant admits that on the 3rd day of January, 1927 Robert Rex Downie made application to the Commissioner of Patents of the United States for patent on certain alleged new and useful improvements in Dipper Scoop Assembly, but denies that said Robert Rex Downie was the original, first and true inventor of said alleged new and useful improvements, denies that said alleged improvements were not known or used by others in this country before said Downie's alleged invention or discovery thereof and not patented or described in any printed publication in this or any foreign country before said Downie's alleged invention or discovery thereof, or more than two years prior to said application for patent and not in public use or on sale in the United States for more than two years prior to said application, and not abandoned by said Downie to the public, and not first patented or caused to be patented by said Downie, or his legal representatives or assigns, in any foreign country upon an application filed more than twelve months prior to the filing of the application in the United States, and denies that said application was made in accordance with the then existing laws of the United States and complied in all respects with the conditions of said laws.

5. Defendant is not informed, except by said supplemental bill of complaint, whether or not for a good and valuable consideration, by an instrument in writing, executed and recorded in the Patent Office, the said Robert Rex Downie assigned to the plaintiff the whole right, title and interest in and to his alleged invention and authorized the Commissioner of Patents to issue the patent for said alleged invention to the plaintiff, and therefore denies the same.

6. Defendant admits that Letters Patent of the United States No. 1,709,466 issued on the aforesaid application but denies that due proceedings were had on said application in accordance with all the requirements of law and denies that said patent was signed, sealed and executed in due form of law.

7. Defendant admits that on the 22nd day of May 1926 Robert Rex Downie made application to the Commissioner of Patents for a patent on certain alleged new and useful improvements in Excavating Scoops, but denies that said application was made in accordance with the then existing laws of the United States and complied in all respects with said laws and further denies that said Robert Rex Downie was the original, first and true inventor of said alleged improvements, and denies that said alleged improvements were not known or used by others in this country before said Downie's alleged invention or discovery thereof, were not patented or described in any printed publication in this or any foreign country before said Downie's alleged invention or discovery thereof, or more than two years prior to his said application for patent thereon, and denies that said alleged improvements were not in public use or on sale in the United States for more than two years prior to said application, and were not abandoned by said Downie to the public and were not first patented or caused to be patented by him or his legal representatives or assigns in any foreign country upon an application filed more than twelve months prior to the filing of said application in the United States.

8. Defendant is not informed as to whether or not for a good and valuable consideration, by an instrument in writing, the said Robert Rex Downie assigned to the plaintiff the whole right, title and interest in and to his alleged invention, as set forth in the application for patent last mentioned, and authorized the Commissioner of Patents to issue the patent therefor to the plaintiff, and therefore denies the same.

9. Defendant admits that United States patent No. 1,716,432 issued on said Robert Rex Downie's application of May 22, 1926 but denies that due proceedings were had on said application in accordance with all the requirements of law and that said patent was signed, sealed and executed in due form of law.

10. For want of information defendant denies that by reason of the premises prior to the filing of this supplemental bill of complaint, or at any other time, plaintiff became and has remained and now is the sole owner of said patents Nos. 1,709,466 and 1,716,432, and of all rights thereunder.

11. Defendant admits that the plaintiff is engaged in the manufacture and sale of Excavating Machines but is not informed as to whether or not said machines embody the alleged inventions of the aforesaid patents or are manufactured and sold under the protection of said patents and therefore denies the same; and further denies that said alleged inventions of said patents, or either of them, are of great utility and value, or have come extensively into public use with substantial benefits to the public and the plaintiff; and further denies that plaintiff has been to large effort and expense in and about said alleged inventions for the purpose of introducing them into use and supplying embodiments thereof; and denies that plaintiff's business in this connection is now threatened with injury by any act of the defendant herein.

12. Defendant denies that it has, in defiance of said patents, or either of them, or of plaintiff's rights thereunder, or otherwise, made and/or caused to be made and used or sold, or is now making, using or selling, within the Northern District of Ohio, Western Division, or elsewhere, Excavating Machines embodying the alleged invention described and claimed in said patents Nos. 1,709,466 and 1,716,432, or either of them, in infringement of said patents, or either of them, and denies that it threatens to infringe or to continue to infringe either of said patents.

13. Defendant denies that it has derived any unlawful gain or profit from any infringement of said patents or that plaintiff has suffered, or is threatened with any damage by reason of any infringement of said patents by the defendant; denies that any act of defendant has impaired the plaintiff's enjoyment of any exclusive right or privilege which may have been granted to it upon the issue of said Letters Patent, or either of them, or has

unjustly deprived plaintiff of any profit which it would otherwise have realized and enjoyed from said invention.

14. Defendant denies that the alleged inventions of the aforesaid patents, are susceptible of conjoint embodiment and use in one and the same construction, both with each other and with the inventions of the patents set forth in the original bill of complaint, and that they have been so conjointly embodied and used in the machines made and sold by defendant.

15. Defendant further answering denies that the subjects matter attempted to be claimed and covered by the aforesaid patents, and each of them, constitutes patentable subject matter or involves any act of invention, and avers that the subjects matter of said patents, and each of them, comprise mere shop expedients and embody nothing more than the work of a mechanic in selecting and putting together the most desirable parts of machines well known in the art prior to the respective applications for said patents.

16. Defendant further answering avers that said Letters Patent sued on, and each of them, are null and void because they do not describe the alleged inventions, as required by law, in such full, clear, concise and exact terms as to enable any person skilled in the art to construct and use the same, and because the claims of said patents, and each of them, do not particularly point out and distinctly claim the part, improvement or combination which the patentee claims as his invention or discovery.

17. Defendant further answering avers that said Letters Patent sued on, and each of them, are null and void because the alleged inventor thereof was not the original and first inventor or discoverer of the alleged improvements embraced in the respective patents, or of any material and substantial parts thereof, but that the alleged improvements, and each of them, were invented by others before the alleged date of invention by said Downie.

18. Defendant further answering avers that the Letters Patent sued on, and each of them, and all the claims in suit, are null and void because the alleged inventions or discoveries embodied in said patents, and in each of them, and attempted to be covered thereby, or the material and substantial parts thereof, had prior to the alleged invention thereof by said Robert Rex Downie,

been described, disclosed, illustrated, published and patented by various persons, as set forth in the following Letters Patent:

Patent No.	*Date of Grant*	*Inventor*
7,340	May 7, 1850	Davis
77,949	May 19, 1868	Barnes
254,563	Mar. 7, 1882	Osgood
477,933	June 28, 1892	Hennebery
493,421	Mar. 14, 1893	Butler
508,685	Nov. 14, 1893	Davy
589,565	Sep. 7, 1897	King
709,733	Sep. 23, 1902	Barton et al.
741,099	Oct. 13, 1903	Bisbee
857,577	June 25, 1907	Becker
892,508	July 7, 1908	Fairbanks
998,029	July 18, 1911	Munn
1,103,476	July 14, 1914	Bishop
1,107,252	Aug. 18, 1914	Black
1,147,432	July 20, 1915	Potter
1,233,574	July 17, 1917	Hemme
1,245,118	Oct. 30, 1917	Moore
1,249,805	Dec. 11, 1917	Morrison et al.
1,265,730	May 14, 1918	Billings
1,315,512	Sep. 9, 1919	Keith
1,340,385	May 18, 1920	Edmondson
1,446,389	Feb. 20, 1923	McGrew
1,485,198	Feb. 26, 1924	Pugh
1,511,114	Oct. 7, 1924	Downie
1,518,314	Dec. 9, 1924	Downie
1,560,136	Nov. 3, 1925	Bentson
1,589,725	Apr. 13, 1926	Harrison
1,648,783	Nov. 8, 1927	Rosselle
1,611,495	Dec. 21, 1926	Jelen

Defendant begs leave to insert herein, by way of amendment, the names, dates and numbers of other prior patents and the identifying data of other publications and such suitable information in connection with prior users, as such patents, publications and information may be discovered and promptly pleaded herein by way of amended answer.

19. Defendant further answering denies that it has in any way or in any manner trespassed upon the plaintiff's lawful rights in the premises and denies that the plaintiff is entitled to any relief against defendant by

way of injunction, or otherwise, or to any accounting or any other equitable relief against it.

All of which matters and things defendant will maintain and prove and prays to be hence dismissed with its reasonable costs sustained.

THE GENERAL EXCAVATOR CO.,
By EDWARD L. REED,
Solicitor for Defendant.

H. W. FRASER,
Of Counsel.

PLAINTIFF'S INTERROGATORIES.

(Filed Oct. 21, 1929.)

[Case No. 964]

Now comes the plaintiff, the Keystone Driller Company, by its attorneys, and within twenty-one (21) days after the filing of defendant's answer to the supplemental bill of complaint, and applies to the Court for an order allowing plaintiff to file interrogatories and directing Mr. C. A. Owens, Secretary, or other officer or employee of defendant company having knowledge of the matters inquired about, to answer the following interrogatories under oath:

(1) Did defendant make, use and/or sell the particular machine pictured in photographs, plaintiff's exhibits 1 to 10 inclusive attached hereto, between June 11, 1929, the date of issue of Letters Patent, No. 1,716,432 here in suit and August 23, 1929, the date of filing of the supplemental bill of complaint. For defendant's information in answering this and subsequent interrogatories plaintiff states that the machine shown in the photographs just mentioned bore the following markings: No. 1323, General Excavator Company, Marion, Ohio, U.S.A., Patented September 26, 1922, 9155, Richards and Gaston, Inc., Somerville, N. J., when the photographs were made at Somerville, N. J., in July, 1929.

(2) If the answer to interrogatory No. 1 is in the negative then did defendant make, use and/or sell, between June 11, 1929 and August 23, 1929 any excavating scoops having teeth secured to the sides thereof like the scoop shown by Nos. 1-3-6-8- and/or 10 of the attached photographs, plaintiff's exhibits 1 to 10 inclusive.

(3) If the answers to interrogatories 1 and/or 2 are in the negative will defendant furnish plaintiff at the time of filing answers to these interrogatories with drawings of all the excavating scoops having teeth secured to the sides thereof which defendant has made, used and/or sold between June 11, 1929 and August 23, 1929.

(4) Did defendant make, use and/or sell the particular machine pictured in the photographs, plaintiff's exhibits 1 to 10 inclusive, attached hereto, between April 16, 1929, the date of issue of Letters Patent No. 1,709,466, here in suit, and August 23, 1929 the date of filing of the supplemental bill of complaint.

(5) If the answer in interrogatory No. 4 is in the negative then did defendant make, use and/or sell between April 16, 1929 and August 23, 1929 any ditcher stick and/or excavating scoop like those shown by Nos. 2-4-5-6-7-8-9 and/or 10 of the attached photographs, plaintiff's exhibits 1 to 10 inclusive.

(6) If the answers to interrogatories 4 and/or 5 are in the negative, will defendant furnish plaintiff, at the time answers to these interrogatories are filed, with drawings of all the ditcher sticks and excavating scoops adapted to be removably assembled together which defendant has made, used and/or sold between April 16, 1929 and August 23, 1929.

The foregoing interrogatories are intended to elicit facts material to plaintiff's case and are in accordance with the provisions of Equity Rule No. 58 and the established practice in the Courts of this District and Circuit.

RICHEY & WATTS,
Attorneys for Plaintiff.

It is hereby ordered that the foregoing interrogatories be filed and that Mr. C. A. Owens, or other officer or employee of the defendant company having knowledge of the facts inquired about make answer to the interrogatories under oath.

GEO. P. HAHN,
U. S. District Judge.

DEFENDANT'S OBJECTIONS TO PLAINTIFF'S INTERROGATORIES.

(Filed Oct. 31, 1929.)

[Case No. 964]

Now comes the defendant, The General Excavator Company, and objects to interrogatories filed by the plaintiff on the 21st day of October, 1929, on the following grounds:

1. The supplemental bill of complaint herein contains a prayer for treble damages. Treble damages constitute a penalty and the defendant cannot be required to furnish evidence against itself in a case involving a penalty.

2. The photographs attached to the interrogatories do not show the construction of the mechanism illustrated therein with sufficient clearness and detail to enable defendant to answer Interrogatories Nos. 1 and 4. The interrogatories contain the statement that the machine shown in the photographs bears the name of the defendant company, together with certain numbers. Even if the defendant did sell a machine bearing the numbers and markings alleged in the interrogatories it does not follow that at the time the photographs were taken the machine was in the same condition as it was when sold by defendant. The backhoe attachment is readily removable from the machine as a whole and the ditcher stick and scoop can be readily removed from the backhoe attachment and replaced. Hence the photographs do not afford sufficient information to enable Interrogatories Nos. 1 and 4 to be answered.

3. The photographs attached to the interrogatories do not show the shape or detail characteristics of the side teeth on the scoop and therefore the information furnished thereby is insufficient to enable Interrogatory No. 2 to be answered. Patent No. 1,716,432 relates to the specific shape of the side teeth and not to the use of side teeth broadly.

4. Interrogatory No. 3 requires defendant to furnish drawings of all excavating scoops having side teeth made, used and/or sold by it during the specified period. Plaintiff is not entitled to information relating to all such devices manufactured and sold by the defendant. This is merely an attempt under the guise of an interrogatory to secure detailed information regarding defendant's product without regard to any question of infringement.

5. Interrogatory No. 5 is objectionable for the same reasons as is Interrogatory No. 2. The photographs attached to the interrogatories show portions only of the ditcher stick and scoop and do not show the construction thereof with sufficient clearness and detail to enable the defendant to answer this interrogatory.

6. Interrogatory No. 6 is objected to on the same ground as is Interrogatory No. 3. It calls for drawings of all ditcher sticks and excavating scoops adapted to be removably assembled which defendant may have made, used or sold during the specified period and plaintiff is not entitled to information as to all devices so made and sold.

THE GENERAL EXCAVATOR COMPANY,
By EDWARD L. REED,
Solicitor for Defendant.

H. W. FRASER,
Of Counsel.

I hereby acknowledge service and a copy of the foregoing objections on this 31st day of October, 1929.

G. E. KIRK,
Counsel for Plaintiff.

STIPULATION RE INTERROGATORIES AND DEPOSITIONS.

(Filed Oct. 31, 1929.)

[Case No. 964]

It is hereby stipulated by and between Counsel for the respective parties, the Honorable Court consenting, that defendant's time for filing interrogatories under the Supplemental Bill of Complaint and answer thereto herein now due to expire on October 21, 1929, may be and it

hereby is extended thirty (30) days or to and including November 21, 1929.

It is further stipulated by and between counsel for the respective parties, the Honorable Court consenting, that the time for taking depositions of both parties under said Supplemental Bill of Complaint in accordance with the provisions of Equity Rule 47 shall be extended to commence to run from and after November 21, 1929.

RICHEY & WATTS,
Attorneys for Plaintiff.

October 18th, 1929.

EDWARD L. REED,
Attorney for Defendant.

October 18th, 1929.

Approved:
GEO. P. HAHN, *Judge.*

STIPULATION AND ORDER EXTENDING TIME OF DEFENDANT TO TAKE DEPOSITIONS.

(Filed Oct. 31, 1929.)

[Case No. 964]

It is hereby stipulated by and between Counsel for the respective parties, the Honorable Court consenting, that defendant's time for taking original depositions under the provisions of Equity Rule 47 shall be, and hereby is, extended to and including November 26, 1929, and both parties' times for taking rebutting depositions is extended accordingly.

RICHEY & WATTS,
Attorneys for Plaintiff.

October 25, 1929.

EDWARD L. REED,
Attorney for Defendant.

October 24, 1929.

Approved:
GEO. P. HAHN, *Judge.*

STIPULATION RE DEPOSITIONS.

(Filed Dec. 4, 1929.)

[Case No. 964]

It is hereby stipulated by and between Counsel for the respective parties, the Honorable Court consenting, that defendant's time for taking original depositions under the provisions of Equity Rule 47 shall be, and hereby is, extended to and including December 26, 1929, and both parties' times for taking rebutting depositions is extended accordingly.

RICHEY & WATTS,

November 29, 1929. *Attorneys for Plaintiff.*

EDWARD L. REED,

November 27, 1929. *Attorney for Defendant.*

STIPULATION RE DEPOSITIONS.

(Filed Jan. 3, 1930.)

[Case No. 964]

It is hereby stipulated by and between Counsel for the respective parties, the Honorable Court consenting, that defendant's time for taking original depositions under the provisions of Equity Rule 47 shall be, and hereby is, extended to and including January 26, 1930, and both parties' time for taking rebutting depositions is extended accordingly.

RICHEY & WATTS,

December 26, 1929. *Attorneys for Plaintiff.*

EDWARD L. REED,

December 24, 1929. *Attorney for Defendant.*

STIPULATION RE DEPOSITIONS.

(Filed Feb. 4, 1930.)

[Case No. 964]

It is hereby stipulated by and between Counsel for the respective parties, the Honorable Court consenting, that defendant's time for taking original depositions under the provisions of Equity Rule 47 shall be, and hereby is, extended to and including February 26, 1930, and both parties' time for taking rebutting depositions is extended accordingly.

RICHEY & WATTS,

January 31, 1930. *Attorneys for Plaintiff.*

EDWARD L. REED,

January 30, 1930. *Attorney for Defendant.*

Approved:

JOHN M. KILLITS, *U. S. Dist. Judge.*

MOTION AND ORDER EXTENDING TIME FOR TAKING DEPOSITIONS.

(Filed Feb. 21, 1930.)

[Case No. 964]

Now comes the defendant, by its attorneys, and moves the court for an order extending its time for taking original depositions under the provisions of Equity Rule 47, to and including March 26, 1930.

FRASER, HIETT, WALL & EFFLER,

Attorneys for Defendant.

February 21, 1930.

Time extended to and including March 26, 1930.

GEO. P. HAHN,

District Judge.

STIPULATION RE DEPOSITIONS.

(Filed Feb. 27, 1930.)

[Case No. 964]

It is hereby stipulated by and between Counsel for the respective parties, the Honorable Court consenting, that Defendant's time for taking depositions under the Supplemental Bill of Complaint in the above entitled case in accordance with the provisions of Equity Rule 47, shall be, and hereby is, extended to and including March 21, 1930, and the time of both parties for taking rebuttal depositions is extended accordingly.

RICHEY & WATTS,
Attorneys for Plaintiff.

Feb. 27, 1930.

EDWARD L. REED,
Attorney for Defendant.

Feb. 27, 1930.

It is so ordered:

GEO. P. HAHN, *U. S. Dist. Judge.*

MOTION AND ORDER EXTENDING TIME FOR TAKING DEPOSITIONS AND AFFIDAVIT OF EDWARD L. REED IN SUPPORT.

(Filed March 18, 1930.)

[Case No. 964]

Now comes the defendant, by its attorney, and moves that the time for taking original depositions under the provisions of Equity Rule 47 in the above entitled case, now due to expire on March 26, 1930, be extended to and including April 26, 1930.

EDWARD L. REED,
Attorney for Defendant.

March 17, 1930.

Time ordered extended to and including April 26, 1930, in accordance with above motion.

GEO. P. HAHN,
District Judge.

AFFIDAVIT OF EDWARD L. REED IN SUPPORT OF MOTION.

(Filed March 18, 1930.)

[Case No. 964]

STATE OF OHIO,
COUNTY OF MONTGOMERY, SS.

Edward L. Reed, of Dayton, Ohio, being first duly sworn deposes and says that he is attorney for the defendant in the above entitled case; that defendant's time for taking depositions under the provisions of Equity Rule 47 will expire on the 26th day of March 1930; that defendant has proceeded as rapidly as possible in making the necessary investigations and taking the depositions in this case and has up to the present time taken the depositions of between twenty and twenty-five witnesses in five states; that defendant has served notice on plaintiff that it will take the depositions of five witnesses at Joplin, Missouri, beginning March 19, 1930 and will take a deposition at Leadville, Colorado, beginning March 24, 1930; that the time now available for taking depositions will be barely sufficient to complete the taking of the testimony of the witnesses named in the aforesaid notice and no time will be left for the taking of depositions of other witnesses whose testimony may be necessary to the support of the defenses set out in the answer to the original bill of complaint; that the extension requested is for defendant's time for taking depositions under the original bill of complaint and not under the supplemental bill of complaint; and that defendant will need this additional time to complete its defenses to the original bill of complaint.

EDWARD L. REED.

Subscribed and sworn to before me a Notary Public in and for the aforesaid county, this 17th day of March, 1930.

MATTHEW SIEBLER,
Notary Public in and for Montgomery County, Ohio.

(Seal)

My commission expires July 22, 1931.

STIPULATION RE DEPOSITIONS.

(Filed April 1, 1930.)

[Case No. 964]

It is hereby stipulated by and between Counsel for the respective parties, the Honorable Court consenting, that defendant's time for taking depositions under the Supplemental Bill of Complaint in the above entitled case, in accordance with the provisions of Equity Rule 47, shall be, and hereby is, extended to and including April 21, 1930, and the time of both parties for taking rebuttal depositions is extended accordingly.

RICHEY & WATTS,

March , 1930. *Attorneys for Plaintiff.*

EDWARD L. REED,

March 17, 1930. *Attorney for Defendant.*

STIPULATION RE DEPOSITIONS.

(Filed April 29, 1930.)

[Case No. 964]

It is hereby stipulated by and between Counsel for the respective parties, the Honorable Court consenting, that defendant's time for taking original depositions under the provisions of Equity Rule 47 shall be, and hereby is, extended to and including May 11, 1930, and both parties' time for taking rebutting depositions is extended accordingly.

RICHEY & WATTS,

April 24, 1930. *Attorneys for Plaintiff.*

EDWARD L. REED,

April 22, 1930. *Attorney for Defendant.*

ORDER ALLOWING SUBSTITUTION OF BOND.

(Entered May 17, 1930, by Geo. P. Hahn, Judge.)

[Case No. 964]

The Defendant, The General Excavator Company, having submitted a substitute bond in lieu of the preliminary injunction, said bond having been executed by The General Excavator Company as principal and the United States Fidelity & Guaranty Company as surety, and said substitute bond having been approved by this court as to form and sufficiency,

IT IS HEREBY ORDERED:

First, that said bond, executed by The General Excavator Company as principal and the United States Fidelity & Guaranty Company as surety, be substituted for the bond executed by said The General Excavator Company as principal and the American Surety Company of New York as surety, and heretofore filed by the Defendant in lieu of a preliminary injunction.

Second, that the original bond, executed by The General Excavator Company as principal and the American Surety Company of New York as surety is hereby released and said The General Excavator Company and said American Surety Company of New York are hereby discharged from any and all liability under said bond.

GEO. P. HAHN,
District Judge.

Approved as to form this 15th day of May, 1930.

GEO. E. KIRK,
Of Counsel for Keystone Driller Co.

BOND IN LIEU OF PRELIMINARY INJUNCTION.

(Filed May 17, 1930.)

[Case No. 964]

UNITED STATES OF AMERICA,
NORTHERN DISTRICT OF OHIO,
WESTERN DIVISION, ss.

KNOW ALL MEN BY THESE PRESENTS, that we, The General Excavator Company, of Marion, in the County of Marion, and State of Ohio, as principal, and the United States Fidelity & Guaranty Company of the City of Baltimore and State of Maryland, as surety, are held and firmly bound unto the Keystone Driller Company in the sum of Fifteen Thousand ($15,000.00) Dollars, lawful money of the United States, to be paid to said Keystone Driller Company, its successors or assigns; to which payment, well and truly to be made, we bind ourselves and each of us, jointly and severally, and each of our successors and assigns, by these presents.

Sealed with our seals and dated this 7th day of May, 1930.

WHEREAS, the above named Keystone Driller Company, plaintiff in this cause, has presented to the court its motion for a preliminary injunction, which motion has been denied upon the condition that defendant, The General Excavator Company, file in this cause an appropriate bond payable to the plaintiff, and covering damages which may accrue to the plaintiff from and after the 22nd day of April, 1929.

NOW, THEREFORE, the condition of this obligation is such that, if the said The General Excavator Company shall pay to said Keystone Driller Company all profits or damages which may be decreed against said The General Excavator Company, in this cause, for infringement of the patents included in the bill of complaint in said cause between the 22nd day of April, 1929, and the date of the final decree in said cause, then these presents and this obligation shall be void; otherwise they shall remain in full force and effect.

THE GENERAL EXCAVATOR COMPANY,
By M. C. MCNEIL, *Secretary.*
UNITED STATES FIDELITY & GUARANTY CO.,
By THOMAS F. MOONEY, *Attorney-in-fact.*

Approved: (Surety Co. Seal)

GEO. P. HAHN,
United States District Judge.

STIPULATION RE DEPOSITIONS.

(Filed June 3, 1930.)

[Case No. 964]

It is hereby stipulated by and between Counsel for the respective parties, the Honorable Court consenting, that Defendant's time for making Depositions under the Original and the Supplemental Bills of Complaint in the above entitled case in accordance with the provisions of Equity Rule 47, shall be, and hereby is, extended to and including May 26, 1930, and the time of both parties for taking rebuttal depositions is extended accordingly.

RICHEY & WATTS,
Attorneys for Plaintiff.

May 8, 1930.

EDWARD L. REED,
Attorney for Defendant.

May 7, 1930.

Approved:
GEO. P. HAHN, *U. S. Dist. Judge.*

STIPULATION AND ORDER IN RE DEPOSITIONS.

(Filed June 26, 1930.)

[Case No. 964]

It is hereby stipulated by and between Counsel for the respective parties, the Honorable Court consenting, that Defendant's time for taking Depositions under the Original and Supplemental Bills of Complaint in the above-entitled case, in accordance with the provisions of Equity Rule 47, shall be, and hereby is, extended to and including July 26, 1930, and the time of both parties for taking rebuttal depositions is extended accordingly.

RICHEY & WATTS,
Attorneys for Plaintiff.

June 23rd, 1930.

EDWARD L. REED,
Attorney for Defendant.

June 21, 1930.

It is so ordered:
GEO. P. HAHN, *U. S. D. J.*

STIPULATION RE DEPOSITIONS.

(Filed July 29, 1930.)

[Case No. 964]

It is hereby stipulated by and between Counsel for the respective parties, the Honorable Court consenting, that Defendant's time for taking Depositions under the Original and Supplemental Bills of Complaint in the above-entitled case, in accordance with the provisions of Equity Rule 47, shall be, and hereby is, extended to and including August 26, 1930, and the time of both parties for taking rebuttal depositions is extended accordingly.

RICHEY & WATTS,

July 22, 1930. *Attorneys for Plaintiff.*

EDWARD L. REED,

July 21, 1930. *Attorney for Defendant.*

It is so ordered:

GEO. P. HAHN, *U. S. D. Judge.*

STIPULATION RE DEPOSITIONS.

(Filed Sep. 5, 1930.)

[Case No. 964]

It is hereby stipulated by and between Counsel for the respective parties, the Honorable Court consenting, that defendant's time for taking Depositions under the Original and Supplemental Bills of Complaint in the above-entitled case, in accordance with the provisions of Equity Rule 47, shall be, and hereby is, extended to and including September 20, 1930, and the time of both parties for taking rebuttal depositions is extended accordingly.

RICHEY & WATTS,

August 22, 1930. *Attorneys for Plaintiff.*

EDWARD L. REED,

August 21, 1930. *Attorney for Defendant.*

STIPULATION RE DEPOSITIONS.

(Filed Sep. 23, 1930.)

[Case No. 964]

It is hereby stipulated by and between Counsel for the respective parties, the Honorable Court consenting, that defendant's time for taking depositions under the Original and Supplemental Bills of Complaint in the above-entitled case, in accordance with the provisions of Equity Rule 47, shall be, and hereby is, extended to and including September 30, 1930, and the time of both parties for taking rebuttal depositions is extended accordingly.

RICHEY & WATTS,
Attorneys for Plaintiff.

September 19, 1930.

EDWARD L. REED,
Attorney for Defendant.

September 18, 1930.

It is so ordered:

JOHN M. KILLITS, *U. S. D. J.*

ORDER EXTENDING DEFENDANT'S TIME FOR TAKING DEPOSITIONS.

(Entered Sep. 29, 1930, by Geo. P. Hahn, Judge.)

[Case No. 964]

It is hereby ordered that the defendant's time for taking depositions in both the Original and Supplemental Bills be and hereby is extended to and including October 30th, 1930.

GEO. P. HAHN,
United States District Judge.

ORDER EXTENDING DEFENDANT'S TIME FOR TAKING DEPOSITIONS.

(Entered Oct. 29, 1930, by Geo. P. Hahn, Judge.)

[Case No. 964]

It is hereby ordered that the defendant's time for taking depositions on both the Original and Supplemental Bills be and hereby is extended to and including November 30th, 1930.

GEO. P. HAHN,
United States District Judge.

ORDER EXTENDING DEFENDANT'S TIME FOR TAKING DEPOSITIONS.

(Entered Nov. 26, 1930, by Geo. P. Hahn, Judge.)

[Case No. 964]

It is hereby ordered that defendant's time for taking depositions under the provisions of Equity Rule 47 in the above-entitled case, now due to expire on November 30, 1930, be extended for a period of thirty days or to and including December 30, 1930. This is the last extension.

November 26, 1930.

GEO. P. HAHN,
United States District Judge.

MOTION TO COMPEL PRODUCTION AND INSPECTION OF DOCUMENTS AND AFFIDAVIT OF EDWARD L. REED.

(Filed Dec. 20, 1930.)

[Case No. 964]

Now comes The General Excavator Company, by its attorney, and moves this Court, under Equity Rule 58, for an order to compel plaintiff herein to produce for inspection of defendant, within at least five days after the granting of this motion, with the right to make copies, the following documents in plaintiff's possession or under its control and containing evidence material to the defense herein, to-wit:

1. All papers "marked for identification" by plaintiff, as plaintiff's exhibits A to I, inclusive; during the taking of the deposition of Bernard R. Clutter at Lakewood, N. J., October 21st to 23rd, 1930.

2. The cancelled check for $476.00 issued by the Keystone Driller Company on or about February 16th, 1928, to Bernard R. Clutter, and referred to in the Keystone Driller Company's letter dated December 17, 1928, to Mr. Bernard R. Clutter, 17 Edgewood Court, Lakewood, N. J.

3. The original memorandum of agreement dated April 11, 1925, between Bernard R. Clutter and the Keystone Driller Company and referred to in the letter of the Keystone Driller Company to Mr. Burn R. Clutter, 17 Edgewood Court, Lakewood, N. J., dated December 4, 1928.

4. The contract, mortgage, notes, books of account, showing credits and debits relating to the Keystone Driller Company's excavator, shop number 4918, shipped to the Clutter Contracting Co., March 9, 1925, on Pennsylvania Railroad car 925186 and invoiced by the Keystone Driller Company on March 9, 1925, to Clutter Contracting Company, Lakewood, N. J., Keystone Driller Company, order No. SS-1792, and correspondence between the Keystone Driller Company and Bernard R. Clutter or The Clutter Contracting Company, relating to the said excavator.

5. The contract, mortgage, notes, books of account showing credits and debits relating to the Keystone Driller Company's excavator, shop number

5,009 shipped to The Clutter Contracting Company, Tuckerton, N. J., on July 14, 1925, on N. P. car 68,513 and invoiced by the Keystone Driller Company to The Clutter Contracting Company, Lakewood, N. J., July 14, 1925, Keystone Driller Company Order No. SS-1902, and correspondence between the Keystone Driller Company and Bernard R. Clutter or The Clutter Contracting Company relating to said excavator.

6. Any and all papers, documents, records, correspondence, reports in the possession of or under the control of the Keystone Driller Company relating to the transaction between Keystone Driller Company and Bernard R. Clutter as testified to in the depositions of Bernard R. Clutter and Frederick W. Ransom, and/or relating to the memorandum of agreement between Bernard R. Clutter and the Keystone Driller Company dated April 11, 1925.

This motion is supported by an affidavit of Edward L. Reed attached hereto and made a part hereof as Defendant's Exhibit A.

EDWARD L. REED,
Attorney for Defendant.

December 16, 1930.

Notice.

Messrs. Richey & Watts,
Attorneys for Plaintiff,
1090 Union Trust Building,
Cleveland, Ohio.

Gentlemen:

Please take notice that the above Motion will be presented to his Honor, Judge Hahn, in the Court Room, Federal Building, Toledo, Ohio, on the 20th day of December, 1930, at 9:30 o'clock A. M., or as soon thereafter as counsel may be heard.

EDWARD L. REED,
Attorney for Defendant.

A copy of the above Motion, Notice and Affidavits were today mailed to Messrs. Richey & Watts, Attorneys for plaintiff, 1090 Union Trust Building, Cleveland, Ohio.

December 16, 1930. EDWARD L. REED.

EXHIBIT A.

AFFIDAVIT OF EDWARD L. REED.

(Filed Dec. 20, 1930.)

STATE OF OHIO,
COUNTY OF MONTGOMERY, ss.

Edward L. Reed, being first duly sworn, deposes and says that he is attorney for the defendant, The General Excavator Company, in the above entitled cause and that he has represented said defendant during the taking of various depositions to be used on behalf of defendant in the above entitled cause.

That the bill of complaint and supplemental bill of complaint in the above entitled cause charge infringement of five patents, one of which, Letters Patent No. 1,511,114, was granted on an application filed by Robert Rex Downie, an officer of the plaintiff company; that one of the defenses set up as to the alleged infringement of said patent No. 1,511,114 is the fact that the patentee thereof, the said Robert Rex Downie, was not the first, true or original inventor of the alleged invention described and claimed in said patent.

This defense as to patent No. 1,511,114, is supported by the depositions of Bernard R. Clutter, Phil C. Culbertson, W. L. Culbertson, John Cummings, M. A. Elsner, Lysle A. Hazen and Herbert H. Wallower, taken on behalf of the defendant herein and now on file in this Court. The aforesaid depositions show that the alleged invention of the aforesaid patent No. 1,511,114 was first conceived by Bernard R. Clutter and Herbert H. Wallower and was caused by them to be embodied in a full size operative device which was completed and publicly used on a commercial job by said Bernard R. Clutter and Herbert H. Wallower at Joplin, Missouri, in the early part of 1920, and prior to any use thereof by said Robert Rex Downie or the Keystone Driller Company.

In the above mentioned deposition of Bernard R. Clutter said Clutter testified that the officials of the Keystone Driller Company had knowledge of the public use of the device embodying the invention of said patent No. 1,511,114 at Joplin, Missouri, in the early part of 1920, and in a second deposition of said Robert Rex Downie taken at Lakewood, N. J., on October 21, 22 and 23, of 1930, and attended by deponent, said Clutter further testified that during the early part of the year 1925 said Robert Rex Downie, then an officer of the Keystone Driller Company, voluntarily called upon him at his

home in Lakewood, N. J.; that said Downie was at that time accompanied by one, Howard Elmire, an employee of the Keystone Driller Company, but stated that his business with Clutter was private and requested said Clutter to step out of the house, while Elmire remained in the house that he might discuss the same with him without Elmire having knowledge of what transpired; that Downie then told Clutter that he wished to talk to him about the device which had been used by Clutter at Joplin, Missouri, in the early part of 1920 and explained to Clutter that the Keystone Driller Company had subsequently taken out a patent on that device. Clutter then reminded Downie that the Keystone Driller Company had no right to such a patent as he was the inventor of the device. Downie stated that they had the patent and that they were about to bring suit on the same and that they did not wish Clutter to give to anyone any information regarding his use of the device at Joplin, Missouri. Clutter further testifies that Downie then told him that if he would keep quiet about what transpired at Joplin, Missouri, the Keystone Driller Company would give to him, Clutter, a one-half interest in a new Keystone excavator, that is, they would sell to Clutter a new Keystone excavator at the regular price and then give him credit for one-half of that price, which amounted to something in excess of Four Thousand ($4000.00) Dollars. Clutter further states that inasmuch as he had never made anything out of said invention and this seemed to be the only opportunity he would have to realize anything from the same, as he did not have the money to contest Keystone's right to the patent, he agreed to Downie's proposition and ordered the Keystone excavator, which was later delivered to him.

Clutter further testifies that subsequently to this discussion with Robert Rex Downie the Keystone Driller Company submitted to him for his signature certain papers which he was told were necessary in order to bind him to the proposition as made by Downie and that he signed said papers; that because of his inability to secure payment on certain contract work done by him he was unable to meet his payments on said machine and the said machine was later repossessed by the Keystone Driller Company; that at the time said machine was so repossessed the Keystone Driller Company's suit against The Byers Machine Company, involving patent No, 1,511,114, was pending in the United States District Court at Cleveland, Ohio, and in order to still bind Clutter to

his previous agreement Keystone Driller Company agreed to substitute a cash settlement of approximately Nineteen Hundred and Four ($1904.00) Dollars for the credit which Clutter had on account of the repossessed machine; that upon one pretext or another the Keystone Driller Company repeatedly delayed payment of the cash settlement but that after much correspondence the Keystone Driller Company issued to him a check for Four Hundred and Seventy-Six ($476.00) Dollars on account of the agreed settlement.

Clutter's testimony as to this transaction was corroborated by original letters written to Clutter by the Keystone Driller Company, and other documents, introduced in evidence as defendant's Exhibits Nos. 37, 38, 39, 40 and 41, and was further corroborated by the testimony of Frederick W. Ransom, a former officer of the Keystone Driller Company, whose deposition was taken at Akron, Ohio, on October 24, 1930, now on file in this Court.

Deponent further states that all of the papers referred to in paragraphs 1 to 6, inclusive, of the attached motion relate directly to the aforesaid transaction between the Keystone Driller Company and Bernard R. Clutter, as set forth in the Clutter deposition of October 21 to 23, inclusive, 1930.

All the papers referred to in said motion are undoubtedly in the possession of, or under the control of, the Keystone Driller Company. The papers referred to in paragraph 1 of said motion were in the possession of A. H. Edgerton, counsel for the plaintiff, during the taking of the deposition of said Clutter at Lakewood, N. J., October 21 to 23, inclusive, 1930. The witness Clutter has testified that the papers referred to in paragraphs 2 to 5, inclusive, of the said motion were signed by him and delivered to the Keystone Driller Company.

The production of the papers called for by said motion, in addition to corroborating the testimony of the several witnesses that the alleged invention of said patent No. 1,511,114 was conceived by and publicly used by said Clutter and Wallower, will establish the fact that this public use was known to the Keystone Driller Company prior to the alleged invention thereof by said Robert Rex Downie, and these papers and documents are therefore material to the defense that said Robert Rex Downie was not the first, original and true inventor of the alleged invention described and claimed in the aforesaid

Letters Patent and deponent believes that the production of these papers will enable defendant to make full proof of this fact.

It is requested that these papers be produced by plaintiff within five days from the granting of this motion because defendant's time for taking depositions expires on December 30, 1930, and the papers and documents called for by said motion are of such a character that they will require considerable study; and, the plaintiff herein and said Robert Rex Downie are located out of the district and more than one hundred (100) miles from the place of trial herein and if an inspection of the aforesaid papers shows that testimony in regard to the same is necessary this must be taken by deposition and within the time limit which has been fixed by the Court.

Deponent believes that defendant is entitled to the production and inspection of all the papers set forth in said motion because they are material to the defense set up in its answer and are all within the possession of or under the control of the plaintiff.

EDWARD L. REED.

Sworn to and subscribed before me this 16th day of December, 1930.

MATTHEW SIEBLER,

(Notarial Seal) *Notary Public in and for Montgomery County, Ohio.*

My Commission Expires July 22, 1931.

OFFER BY PLAINTIFF TO PRODUCE LETTERS, DOCUMENTS, ETC.

(Filed Dec. 31, 1930.)

[Case No. 964]

Now comes the Plaintiff and offers to submit to counsel for the Defendant in the above entitled cause, for inspection, all of the letters and other documents which are marked for identification by Plaintiff's counsel in the above entitled cause, the cancelled check and the Memorandum Contract, the mortgages, notes, etc. and all of the

correspondence between Clutter and his company, on the one hand, and Plaintiff, on the other hand, regarding the two excavating machines which were repossessed by the Plaintiff from Mr. Clutter and concerning which Mr. Clutter testified; this submission and inspection to be at the office of Richey & Watts, 1090 Union Trust Building, Cleveland, Ohio, at a time in the near future suitable to counsel for both parties. And, moreover, Plaintiff offers to furnish, at Defendant's expense, to Defendant's counsel, copies of any of these documents which Defendant's counsel will agree to offer in evidence at the hearing in the above entitled cause.

This offer is made without Plaintiff conceding that any of these documents or letters are material to any issue in this cause and without waiving any right to object or to move to strike out, or to take other action, regarding such letters and documents, or any evidence concerning the same.

RICHEY & WATTS,
Counsel for Plaintiff.

AFFIDAVIT OF F. O. RICHEY AND A. H. EDGERTON.

(Filed Dec. 31, 1930.)

[Case No. 964]

STATE OF OHIO,
COUNTY OF CUYAHOGA, ss.

F. O. Richey and A. H. Edgerton being duly sworn, depose and say:

We are members of the firm of Richey & Watts, who have and do represent the plaintiff in numerous suits brought upon the Downie Patent No. 1,511,114, including the Byers case which has been decided by the Court of Appeals and the two suits at bar. One or both of us have been closely associated with the litigation over this patent ever since it was instituted. Mr. Richey has conducted all of these suits for the plaintiff. Mr. Edgerton has as-

sisted in all of them and has attended the taking of all of the depositions taken in the above entitled case, including those by Mr. Clutter.

We are familiar with the testimony regarding the Joplin experiment and with the machine said to have been used therein and illustrated in Defendant's Exhibit 26. In the opinion of both and each of us the work at Joplin was an abandoned experiment and the machine illustrated in Exhibit 26 embodies none of the inventions of the Downie patent No. 1,511,114, and is described by none of the claims in that patent. In our opinion the machine illustrated in Exhibit 26 is not capable of operating and did not operate according to the machine of the said Downie patent or realized the advantages or results of that machine upon which its patentability has been sustained by Judge Jones or the Court of Appeals in this Circuit.

The Joplin machine contains certain elements and operates in certain respects as does the machine of the patent, but that is true of a great many of the machines relied upon by the Defendant in the Byers case, and was not sufficient to defeat the patentability of the machine in the courts. Many of the operations and functions of the machine of the patent are not even claimed by Defendants' witnesses to have been realized by the machine of Exhibit 26 and at least one such that some of the witnesses claim, in our opinion, the machine of Exhibit 26 is clearly incapable of performing.

We have gone over the brief filed with this affidavit and we are informed and believe that the facts stated in said brief on information and belief are true.

In coming to the conclusion that the Joplin work was an abandoned experiment we have been persuaded by the holding of the Supreme Court in *Elizabeth vs. Pavement*, 97 U. S. 126, and by the Court in this District (Westenhaver, *J.*) in *Buckeye vs. Wolf*, 291 Fed. 253 which was affirmed by the Court of Appeals in this Circuit in *Wolf vs. Buckeye*, 296 Fed. 680, which has further been affirmed by numerous other courts on the patents involved in those suits.

(*Buckeye v. Cooley*, 17 Fed. (2d) 453, C. C. A. 3d Cir.;

Buckeye v. Petersine, 19 Fed. (2d) 721, C. C. A. 6th Cir.;

Buckeye v. Hillpot, 24 Fed. (2d) 341, C. C. A. 3d Cir.;

Buckeye v. Blum, 27 Fed. (2d) 333, C. C. A. 6th Cir.)

Further affiants sayeth naught.

F. O. RICHEY,
A. H. EDGERTON.

Sworn to before me and subscribed in my presence this 29th day of December, 1930.

J. D. DOUGLASS,
(Seal) *Notary Public.*

J. D. DOUGLASS, NOTARY PUBLIC.
My Commission Expires July 21, 1933.

AFFIDAVIT OF ROBERT REX DOWNIE.

(Filed Dec. 31, 1930.)

[Case No. 964]

PRINTER'S NOTE:

This affidavit was offered in evidence as Defendant's Exhibit No. 129. It has been omitted at this point to comply with the Equity Rule against duplication, and will be found duly indexed among the Exhibits.

ORDER DISMISSING DEFENDANTS' MOTION TO COMPEL PRODUCTION AND INSPECTION OF DOCUMENTS.

(Entered Feb. 2, 1931, by Geo. P. Hahn, Judge.)

[Case No. 964]

This cause came on to be heard before this Honorable Court the 3rd day of January, 1931, upon Defendants' motion to compel production and inspection of documents dated December 15, 1930, and the Court having considered the same upon the briefs and arguments of counsel for the parties.

It is hereby ordered, adjudged and decreed that the Defendants' motion to compel production and inspection of documents be dismissed without prejudice and the same is hereby dismissed without prejudice.

GEO. P. HAHN,
District Judge.

Approved as to form by counsel for Defendants.

GEDDES, SCHMETTAU, WILLIAMS, EVERSMAN & MORGAN,
EDWARD H. REED,
FRASER, HIETT, WALL & EFFLER,

Approved as to form by counsel for Plaintiff.

RICHEY & WATTS.

STIPULATION IN RE TITLE TO CERTAIN PATENTS.

(Filed Feb. 11, 1931.)

[Case No. 964]

It is hereby stipulated and agreed by and between counsel in the above entitled cause, this Honorable Court consenting,

1. That the Keystone Driller Company, Plaintiff herein, is now and was at the time of filing the Bill of Complaint in the above entitled suit, the owner of the full right, title and interest in and to the following patents, together with the right to sue and collect for damages, profits and gains arising from infringement thereof:

No. 1,317,431, Sept. 30, 1919, Le Roy P. Clutter,
No. 1,511,114, Oct. 7, 1924, R. R. Downie,
No. 1,543,250, June 23, 1925, R. R. Downie;

2. That the Keystone Driller Company, Plaintiff herein, is now and was at the time of filing the Supple-

mental Bill of Complaint in the above entitled suit, the owner of the full right, title and interest in and to the following patents, together with the right to sue and collect for damages, profits and gains arising from infringement thereof:

No. 1,709,466, April 16, 1929, R. R. Downie,
No. 1,716,432, June 11, 1929, R. R. Downie;

3. That the catalogs, bulletins Nos. 2805 and 2703 were issued and distributed by the Defendant, The General Excavator Company;

4. That the Defendant, The General Excavator Company, made, and/or caused to be made, and/or used, and/or sold Back Hoe Machines like those illustrated on pages 2, 9, 10, 11 and 19, and described on pages 8 and 9 in catalog No. 2805, identified as Plaintiff's Exhibit No. 2 attached to Plaintiff's interrogatories, and the advertisements attached to the Affidavit of Vale Downie and identified as Plaintiff's Exhibits "R" and "S," and the Defendant's photographs 170 and 171 identified as Defendant's Exhibits 1 and 2, between June 23, 1925 and February 9, 1929;

5. That the Defendant, The General Excavator Company, made and/or used, and/or sold Back Hoe Excavator Scoops and Back Hoe Excavator Scoop Assemblies like those illustrated on pages 2, 9, 10, 11 and 19 and described on pages 8 and 9 in catalog No. 2805, identified as Plaintiff's Exhibit No. 2 attached to Plaintiff's interrogatories, and the advertisements attached to the Affidavit of Vale Downie and identified as Plaintiff's Exhibits "R" and "S," and the Defendant's photographs 170 and 171 identified as Defendant's Exhibits 1 and 2, between June 11, 1929 and August 23, 1929.

EDWARD L. REED,
Counsel for Defendant.
February 4, 1931.

RICHEY & WATTS,
Counsel for Plaintiff.
February 3, 1931.

STIPULATION AND ORDER ALLOWING USE OF UNCERTIFIED PRINTED COPIES OF PATENTS IN SUIT.

(Entered Feb. 16, 1931, by Geo. P. Hahn, Judge.)

[Case No. 964]

It is hereby stipulated and agreed by and between counsel in the above entitled cause, subject to the approval of the Court, that uncertified printed copies of the patents in suit in the above entitled case may be used with the same force and effect in this case as original or certified copies.

RICHEY & WATTS,

February 12, 1931. *Counsel for Plaintiff.*

EDWARD L. REED,

February 13, 1931. *Counsel for Defendant.*

It is so ordered.

GEO. P. HAHN,

United States District Judge.

ORDER ALLOWING AMENDMENT TO DEFENDANT'S ANSWER TO SUPPLEMENTAL BILL OF COMPLAINT.

(Entered Feb. 16, 1931, by Geo. P. Hahn, Judge.)

[Case No. 964]

It is hereby ordered that the attached amendments to defendant's answer to the supplemental bill of complaint herein be entered and made a part of the original answer and that said amendments shall have the same force and effect as if they had formed a part of the answer as originally filed.

GEO. P. HAHN,

District Judge.

We consent to the foregoing order.

Signed at Cleveland, Ohio, this 3rd day of February, 1931.

RICHEY & WATTS,

Attorneys for Plaintiff.

Signed at Dayton, Ohio, this 4th day of February, 1931.

EDWARD L. REED,
Attorney for Defendant.

AMENDMENT TO ANSWER TO SUPPLEMENTAL BILL OF COMPLAINT.

(Filed Feb. 16, 1931.)

[Case No. 964]

Now comes the defendant, by its attorney, with the approval of this Honorable Court, and amends its answer to the supplemental bill of complaint as follows:

In paragraph 18 of said bill of complaint, at the end of the list of prior art patents, on page 8 of said answer, insert the following:

557,350	Webber	Mar. 31,	1896
579,589	King	Mar. 30,	1897
580,494	King	Apr. 13,	1897
674,417	Howard	May 21,	1901
881,695	Kersey	Mar. 10,	1908
999,953	Boehm	Aug. 24,	1912
1,047,991	Robinson	Dec. 24,	1912
1,107,899	Clutter	Aug. 18,	1914

Foreign Patents:

Great Britain	Whitaker	9,893	1899
Great Britain	H. Jubb	11,496	1903
Great Britain	P. W. D'Alton	655	1882

Publications:

Catalogue of the American Hoist and Derrick Co., of St. Paul, Minn., copyrighted in 1909.

Engineering News & Contracting Magazine, dated October 1924.

"Excavating Machinery" by A. B. McDaniel, published 1913 by McGraw-Hill Book Co., Inc., 239 W. 39th St., New York, N. Y., page 256.

On page 8 of said answer, following paragraph 18, insert the following paragraph:

"18a. Defendant, further answering, avers that the Letters Patent sued on, and each of them, are null and void because prior to the alleged inventions of said Robert Rex Downie the alleged improvements described and claimed in said patents, or the material and substantial parts thereof, were known and used by the following named persons, at the following named places, to-wit:

Daniel H. Mahoney, late of North Bend, Ohio, at Vincennes, Ind., and elsewhere.

E. O. Rood, deceased, and Charles W. Rood, of Orlando, Florida.

Bernard R. Clutter, now of 17 Edgewood Court, Lakewood, New Jersey, at Joplin, Missouri.

Herbert H. Wallower, now of 815 Harrison Ave., Leadville, Colorado, at Joplin, Missouri.

The Marion Steam Shovel Co., of Marion, Ohio, (used by the Charleston South Carolina Mining and Mfg. Co., of Charleston, S. C.; Dunnellon Phosphate Co., at Dunnellon, Florida; and Bartow Phosphate Co., at Bartow, Florida).

The Industrial Brown Hoist Co., Cleveland, Ohio, (formerly Brown Hoisting Machinery Co.).

The Keystone Driller Co., of Beaver Falls, Pa.

The Fairbanks Steam Shovel Co., of Marion, Ohio, (used by George A. Cassell at Crookston, Minnesota, and by the San Benito Land & Water Co., or Rio Grande Construction Co., at San Benito, Texas).

The Vulcan Iron Works, of Toledo, Ohio, (used by the Gillespie Co., of Pittsburgh, Pa., at Allegheny, Pa., Passaic, New Jersey and elsewhere; by Anderson Brothers at St. Louis, Missouri and by Farley and Green at Chicago, Illinois, and elsewhere).

The Thew Automatic Shovel Co., of Lorain, Ohio.

The Northwest Boulevard Co., of Columbus, Ohio.

A. N. Cross, of Tomah, Wisconsin, in Minnesota, Iowa, and Nebraska.

THE GENERAL EXCAVATOR COMPANY,
By EDWARD L. REED,
Attorney.

ORDER ALLOWING AMENDMENT TO DEFENDANT'S ANSWER TO ORIGINAL BILL OF COMPLAINT.

(Entered Feb. 16, 1931, by Geo. P. Hahn, Judge.)

[Case No. 964]

It is hereby ordered that the attached amendments to defendant's answer to the original bill of complaint herein be entered and made a part of the original answer and that said amendments shall have the same force and effect as if they had formed a part of the answer as originally filed.

GEO. P. HAHN,
District Judge.

We consent to the foregoing order.

Signed at Cleveland, Ohio, this 3rd day of February, 1931.

RICHEY & WATTS,
Attorneys for Plaintiff.

Signed at Dayton, Ohio, this 4th day of February, 1931.

EDWARD L. REED,
Attorney for Defendant.

AMENDMENT TO ANSWER TO ORIGINAL BILL OF COMPLAINT.

(Filed Feb. 16, 1931.)

[Case No. 964]

Now comes the defendant, by its attorney, with the approval of this Honorable Court, and amends its answer to the original bill of complaint as follows:

In paragraph 19 of said Answer, at the end of the list of prior patents enumerated on page 9 of the answer, insert the following:

557,350	Webber	Mar. 31, 1896
579,589	King	Mar. 30, 1897
580,494	King	Apr. 13, 1897
674,417	Howard	May 21, 1901
881,695	Kersey	Mar. 10, 1908
999,953	Boehm	Aug. 8, 1911
1,047,991	Robinson	Dec. 24, 1912
1,107,899	Clutter	Aug. 18, 1914

Foreign Patents:

Great Britain	Whitaker	9,893	1899
Great Britain	H. Jubb	11,496	1903
Great Britain	P. W. D'Alton	655	1882

Publications:

Catalogue of the American Hoist and Derrick Co., of St. Paul, Minn., copyrighted in 1909.

Engineering News & Contracting Magazine, dated October 1924.

"Excavating Machinery" by A. B. McDaniel, published 1913 by McGraw-Hill Book Co., Inc., 239 W. 39th St., New York, N. Y., page 256.

In paragraph 20 of said answer, at the end of the list of prior users on page 10 of the answer, insert the following:

Bernard R. Clutter, now of 17 Edgewood Court, Lakewood, New Jersey, at Joplin, Missouri.

Herbert H. Wallower, now of 815 Harrison Ave., Leadville, Colorado, at Joplin, Missouri.

The Marion Steam Shovel Co., of Marion, Ohio, (used by the Charleston, South Carolina Mining and Mfg. Co., of Charleston, S. C.; Dunnellon Phosphate Co., at Dunnellon, Florida; and Bartow Phosphate Co., at Bartow, Florida).

The Industrial Brown Hoist Co., Cleveland, Ohio, (formerly Brown Hoisting Machinery Co.).

The Keystone Driller Co., of Beaver Falls, Pa.

The Fairbanks Steam Shovel Co., of Marion, Ohio, (used by George A. Cassel at Crookston, Minnesota, and by the San Benito Land & Water Co., or Rio Grande Construction Co., at San Benito, Texas).

The Vulcan Iron Works, of Toledo, Ohio, (used by the Gillespie Co., of Pittsburgh, Pa., at Allegheny, Pa., Passaic, New Jersey and elsewhere; by Anderson Brothers at St. Louis, Missouri and by Farley & Green at Chicago, Illinois, and elsewhere).

The Thew Automatic Shovel Co., of Lorain, Ohio.

The Northwest Boulevard Co., of Columbus, Ohio.

A. N. Cross, of Tomah, Wisconsin, in Minnesota, Iowa and Nebraska.

THE GENERAL EXCAVATOR COMPANY,
By EDWARD L. REED,
Attorney.

ORDER CONSOLIDATING CAUSE NO. 964 WITH CAUSE NO. 965 FOR THE PURPOSE OF TRIAL.

(Entered March 3, 1931, by Geo. P. Hahn, Judge.)

[Case No. 964]

It is hereby ordered that the above entitled suit shall be tried and heard by this court together with the suit of Keystone Driller Company, Plaintiff vs. The Osgood Company, Defendant, Equity No. 965; that testimony taken at the hearing by the Plaintiff or either of the Defendants be used in each case with the same force and effect as though the witnesses were examined separately in each of said cases, provided however that, at the trial, the witnesses may be examined or cross examined by the Attorney for either defendant on behalf of the other defendant, or the Attorney for each defendant may examine and cross examine the witnesses separately if they so desire; that objections and exceptions made by counsel in either case apply with equal force and effect in both cases; that any and all exhibits introduced in evidence by any of the parties hereto and/or any test or inspection or examination of any machine or apparatus proffered at hearing by any party hereto be considered by the Court with the same force and effect in both cases (insofar as they may apply to both cases) as though such exhibit were introduced, and such test, inspection or examination were made separately in each of said cases; that if the Court desires arguments and/or briefs after the trial the former be made and the latter filed in the two cases together, but the defendants to have the right to file separate briefs. Plaintiff waives its objection heretofore made to the taking in both cases together of the depositions hitherto taken; that a separate copy of any and all paper exhibits shall be filed in each case, provided that when the original of any of said exhibits is filed in one case, a photographic or other copy of said original exhibit may be filed in the other case subject to comparison with the original and correction if any error or discrepancy be found; that the Plaintiff provide each of the Defendants with a copy of its record and that separate records shall be made and filed in each case, and that separate decrees be entered in each case; and that nothing herein shall deprive the parties to said suits of any material rights or defenses to

which they would be entitled if these cases were tried separately.

GEO. P. HAHN,
U. S. District Judge.

February 23, 1931. I assent to the entry of the above Order.

EDWARD L. REED,
Counsel for Defendant.

February 25, 1931. We assent to the entry of the above Order.

RICHEY & WATTS,
Counsel for Plaintiff.

STIPULATION RE USE OF DEPOSITIONS OF JOHN B. WEBBER, WALTER S. CULVER AND FRANK H. KING.

(Filed March 3, 1931.)

[Case No. 964]

It is hereby stipulated by and between the parties hereto that the depositions of John B. Webber, Walter S. Culver of Toledo, Ohio, and Frank H. King of Marion, Ohio, taken on behalf of the defendant herein and any and all exhibits offered in evidence in connection with said depositions may be offered and received in evidence in the above entitled case under U. S. Revised Statutes, Sections 863, 864 and 865, with the same force and effect as though the said witnesses were at the time of trial herein residing more than one hundred (100) miles from the place of trial thereof.

RICHEY & WATTS,
Counsel for Plaintiff.

Dated March 3, 1931.

EDWARD L. REED,
Counsel for Defendant.

Dated March 3, 1931.

STIPULATION RE DEPOSITION OF WILLIAM MITCHELL.

(Filed March 4, 1931.)

[Case No. 964]

It is hereby stipulated by and between the parties hereto that the deposition of William Mitchell of Marion, Ohio, taken on behalf of the defendant herein and any and all exhibits offered in evidence in connection with said deposition may be offered and received in evidence in the above-entitled case under U. S. Revised Statutes, Sections 863, 864 and 865, with the same force and effect as though the said witness was at the time of trial herein residing more than one hundred (100) miles from the place of trial thereof.

RICHEY & WATTS,
Counsel for Plaintiff.

Dated March 4, 1931.

EDWARD L. REED,
Counsel for Defendant.

Dated March 4, 1931.

ORDER PERMITTING TAKING OF DEPOSITIONS AT SOUTH MILWAUKEE, WISCONSIN.

(Entered April 20, 1931, by Geo. P. Hahn, Judge.)

[Case No. 964]

Upon motion of the defendant, by its attorneys, for leave to take depositions herein and the affidavit of Edward L. Reed in support thereof, it is ordered that said defendant be permitted to take the depositions of the persons named in said motion, to-wit:

William Bager	South Milwaukee, Wisconsin
Werner Lehman	South Milwaukee, Wisconsin
H. O. Jacobson	South Milwaukee, Wisconsin
D. P. Eells	South Milwaukee, Wisconsin
C. A. Kelly	South Milwaukee, Wisconsin

Andrew Vahldieck	South Milwaukee, Wisconsin
N. A. McGrath	South Milwaukee, Wisconsin
Noel S. Hayward	South Milwaukee, Wisconsin
J. H. Imse	South Milwaukee, Wisconsin
M. T. Smith	South Milwaukee, Wisconsin

for use at the trial of the above entitled case in accordance with United States Revised Statutes 863, 864 and 865 upon such notice as is provided by law.

GEO. P. HAHN,
Judge.

MOTION BY PLAINTIFF FOR PROMPT DECREE.

(Filed June 25, 1931.)

[Case No. 964]

Now comes the Plaintiff and moves the Court for a prompt entry of the attached Decree for the following reasons:

(1) The Decree conforms to the decision of this Court handed down on June 22, 1931.

(2) This litigation has been pending since 1926. This particular suit has been pending since the first of 1929. The litigation should be on its way. It can not go on forever.

(3) The Court has found that Mr. Downie's practice regarding certain matters was "highly reprehensible" which, of course, reflects upon Mr. Downie's character and he is entitled to a review of this Court's view on this subject promptly. This is a matter of personal privilege with him and nothing should interfere with or delay his right to an early review.

(4) There is no question regarding the validity and the infringement of the Clutter patent, in any event, and

there is no reason why the entry of this decree should be withheld because of any questions which might be undeterminated regarding any of the other patents. The validity of the Clutter patent was again upheld by Judge Jones in the *Day & Maddock* case.

(5) The Petition for Leave to File Bill of Review in the *Byers* case should not deter the entry of this decree for the reason that such must necessarily be denied since proceedings by Bill of Review is not the proper proceeding in the *Byers* case. (*Central California Canners*, 282 Fed. 406 (C. C. A. 9th); *Simmons vs. Grier*, 258 U. S. 82; *National Brake vs. Christenson*, 278 Fed. 40 (C. C. A. 7th) and, second, because even if it is referred to Judge Jones, it must be denied by him since in the *Day & Maddock* Judge Jones has already three times refused the Plaintiff the right to take these proofs. There is no reason for his changing his mind on the fourth effort.

(6) Judge Jones has, with knowledge of the alleged new evidence in the instant cases and the charges of suppression, fraud, and the furor about the same, held the first Downie patent valid again.

RICHEY & WATTS,
Attorneys for Plaintiff.

Cleveland, Ohio, June 24, 1931.

It is so ordered.

....,
United States District Judge.

June ..., 1931.

ORDER OF CONSOLIDATION FOR APPEAL.

(Entered Sept. 15, 1931, by Geo. P. Hahn, Judge.)

[Case No. 965]

It appearing to the Court that the cases of Keystone Driller Company vs. The General Excavator Company and Keystone Driller Company vs. The Osgood Company, Nos. 964 and 965 respectively, were consolidated for trial, and it further appearing that the best interest of everyone concerned can be served by the consolidation of the printed record in these cases to be sent to the Circuit Court of Appeals.

IT IS THEREFORE ORDERED That the said cases be consolidated into one printed record for the purpose of their removal to the Circuit Court of Appeals for the Sixth Circuit, said record to contain pleadings and papers in each individual case but to include only one copy of such records as appear identical in each case.

GEO. P. HAHN,

United States District Judge.

Dated September 15, 1931.

BILL OF COMPLAINT.

(Filed Feb. 9, 1929.)

[Case No. 965]

To the Honorable, the Judges of the District Court of the United States for the Northern District of Ohio, Western Division:

Keystone Driller Company, plaintiff, brings this its bill of complaint against The Osgood Company, defendant; and plaintiff avers:

I. Plaintiff is a corporation of the State of Pennsylvania, having its principal place of business at Beaver Falls, Pennsylvania, and is a citizen and inhabitant of said State of Pennsylvania.

On information and belief, defendant is a corporation of the State of Ohio, having its principal place of business at Marion, Marion County, Ohio, and is a citizen and inhabitant of said State of Ohio and of the Northern District of Ohio, Western Division.

II. The Court's jurisdiction in this cause is based upon the grounds that the suit is one for infringement of United States patents and prays equitable relief and that the defendant is an inhabitant of the aforesaid district and/or has therein a regular and established place of business where it has committed acts of infringement hereinafter complained of.

III. On and prior to February 11, 1915, Le Roy P. Clutter, a citizen of the United States, then residing at Beaver Falls, Pennsylvania, was the original, first and true inventor of certain new and useful improvements in Ditching or Excavating Machines, not known or used by others in this country before his invention or discovery thereof, and not patented or described in any printed publication in this or any foreign country before his invention or discovery thereof or more than two years prior to his hereinafter mentioned application for patent therefor in the United States, and not in public use or on sale in the United States for more than two years prior to said application, and not by him abandoned prior to said application, and not first patented or caused to be patented by him or his legal representatives or assigns in any foreign country upon an application filed more than twelve months prior to the filing of said application in the United States. So being the original, first and true inventor, as aforesaid, said Le Roy P.

Clutter, on February 11, 1915, made application to the Commissioner of Patents of the United States for a patent for said invention, in accordance with the then existing laws of the United States, and complied in all respects with the conditions and requirements of said laws.

IV. Upon said application of Le Roy P. Clutter, due proceedings were had, in accordance with all requirements of law, such that on September 30, 1919, United States patent No. 1,317,431, signed, sealed and executed in due form of law, was issued for said invention or improvements in Ditching or Excavating Machines, to said Le Roy P. Clutter. And plaintiff brings here into court a copy of said patent and prays that the same may be taken as part of this bill of complaint.

V. For good and valuable consideration, by an instrument in writing executed and delivered on or about May 17, 1921, said Le Roy P. Clutter assigned unto plaintiff the entire right, title and interest in and to said patent No. 1,317,431, together with all rights of recovery for past infringement thereof; as by reference to said instrument or a duly authenticated copy thereof here in court to be produced will more fully appear.

VI. On and prior to June 27, 1921, Robert Rex Downie, a citizen of the United States, then residing at Beaver Falls, Pennsylvania, was the original, first and true inventor of new and useful improvements in Excavating Machines, not known or used by others in this country before his invention or discovery thereof, and not patented or described in any printed publication in this or any foreign country before his invention or discovery thereof or more than two years prior to his hereinafter mentioned application for patent therefor in the United States, and not in public use or on sale in the United States for more than two years prior to said application, and not by him abandoned to the public, and not first patented or caused to be patented by him or his legal representatives or assigns, in any foreign country upon an application filed more than twelve months prior to the filing of said application in the United States. So being the original, first and true inventor, as aforesaid, said Robert Rex Downie, on June 27, 1921, made application to the Commissioner of Patents of the United States for a patent for his said invention, in accordance with the then existing laws of the United States, and complied in all respects with the conditions and requirements of said laws.

VII. For good and valuable consideration, by an instrument in writing executed and recorded in the Patent Office before the grant of a patent on his said application, the said Robert Rex Downie assigned to plaintiff the whole right, title and interest in and to his said invention and authorized the Commissioner of Patents to issue the patent for said invention to the plaintiff.

VIII. Upon said application of Robert Rex Downie, and pursuant to his said assignment to plaintiff, due proceedings were had, in accordance with all requirements of law, such that on October 7, 1924, United States patent No. 1,511,114, signed, sealed and executed in due form of law, was issued to plaintiff for said invention or improvements in Excavating Machines. And plaintiff brings here into court a copy of said patent No. 1,511,114 and prays that the same may be taken as part of this bill of complaint.

IX. On and prior to January 8, 1925, Robert Rex Downie, a citizen of the United States, then residing at Beaver Falls, Pennsylvania, was the original, first and true inventor of certain new and useful improvements in Excavating Machines, not known or used by others in this country before his invention or discovery thereof, not patented or described in any printed publication in this or any foreign country before his invention or discovery thereof or more than two years prior to his hereinafter mentioned application for patent therefor in the United States, and not in public use or on sale in the United States for more than two years prior to said application, and not by him abandoned to the public, and not first patented or caused to be patented by him or his legal representatives or assigns in any foreign country upon an application filed more than twelve months prior to the filing of said application in the United States. So being the original, first and true inventor, as aforesaid, said Robert Rex Downie, on January 8, 1925, made application to the Commissioner of Patents of the United States for a patent on his said invention, in accordance with the then existing laws of the United States, and complied in all respects with said laws.

X. For good and valuable consideration by an instrument in writing executed and recorded in the Patent Office before the grant of a patent on his said application of January 8, 1925, the said Robert Rex Downie assigned to plaintiff the whole right, title and interest in and to his said invention set forth in the application last

mentioned, and authorized the Commissioner of Patents to issue the patent therefor to the plaintiff:

XI. Upon said Robert Rex Downie's said application of January 8, 1925, and pursuant to his assignment to plaintiff of the invention described therein, due proceedings were had, in accordance with all requirements of law, such that on June 23, 1925, United States Patent No. 1,543,250, signed, sealed and executed in due form of law, was issued to plaintiff for said invention or improvements in Excavating Machines. And plaintiff brings here into court a copy of said patent No. 1,543,250 and prays that the same may be taken as part of this bill of complaint.

XII. By reason of the premises, prior to the filing of this bill of complaint, and prior to the acts of infringement hereinafter complained of, plaintiff became and has ever since remained and now is the sole owner of said patents Nos. 1,317,431, 1,511,114 and 1,543,250, and of all rights thereunder including all rights of recovery for past infringement of said patent 1,317,431 since the date of the assignment thereof.

XIII. Under the protection of the aforesaid patents, plaintiff is engaged in the manufacture and sale of Excavating Machines embodying said inventions. Said inventions of said patents and each of them are of great utility and value, and have come extensively into public use, with substantial benefits to the public and to the plaintiff. The plaintiff has been to large effort and expense in and about said inventions for the purpose of introducing them into use and supplying embodiments thereof. Its business in this connection is now threatened with irreparable injury by the acts of defendant hereinafter complained of.

XIV. Prior to December 22, 1926, The Byers Machine Company, a corporation of Ohio, doing business at Ravenna, Ohio, within the Northern District of Ohio and the Eastern Division thereof, made, used and sold and was threatening to continue to make, use and sell excavating machines embodying the inventions set forth in said patents Nos. 1,317,431, 1,511,114 and 1,543,250 and in infringement and in violation of the rights of the plaintiff, Keystone Driller Company, under the aforesaid letters patent; wherefore said plaintiff, on December 22, 1926 brought its bill of complaint in the District Court of the United States for the Northern District of

Ohio, Eastern Division, at Cleveland, Ohio, against said The Byers Machine Company, and in said suit (Equity No. 2084) complained that the said The Byers Machine Company had infringed claim 4 of patent No. 1,317,431 and claims 1 to 14 inclusive of patent No. 1,511,114 and claims 1 to 10 inclusive of patent No. 1,543,250 and threatened further infringement of said letters patent; and said The Byers Machine Company filed its answer to the said bill of complaint; and after the filing of said answer, by stipulation between counsel for the parties to said suit, Byers Machine Company, a corporation of Maryland, was made a party defendant, and the bill of complaint filed December 22, 1926, was amended *nunc pro tunc* to include this new party defendant, Byers Machine Company, and said Byers Machine Company filed an amended answer to the amended bill of complaint; and said cause was tried before the Hon. D. C. Westenhaver, at Cleveland, Ohio, on September 15, 16 and 19, 1927 and was submitted on the briefs of the opposing parties without oral argument by counsel for the respective parties; and the Hon. D. C. Westenhaver died in July, 1928 without having rendered an opinion; and by stipulation between counsel for the respective parties the cause was submitted to the Hon. Paul Jones, District Judge, at Cleveland, Ohio, without a second trial, and was argued before him on January 9, 1929 by counsel for the respective parties; and on the twenty-third day of January, 1929 the court rendered its opinion sustaining the validity of claim 4 of patent No. 1,317,431, claims 1 to 14 inclusive of patent No. 1,511,114 and claims 1 to 10 inclusive of patent No. 1,543,250, and finding all said claims infringed; and on the thirty-first day of January, 1929, a final decree was entered for the plaintiff, Keystone Driller Company, affirming the validity of the claims aforesaid, and ordering a perpetual injunction enjoining and restraining said The Byers Machine Company and Byers Machine Company and each of them from infringing said claims, as will fully appear by reference to the attached copy of the decree; and a perpetual injunction was accordingly issued February 1, 1929 and served that day on a duly authorized agent for said defendants.

XV. Since the respective dates of issue of said patents Nos. 1,317,431, 1,511,114 and 1,543,250, and since the plaintiff acquired its title to and rights under said patents as hereinbefore recited, and within six years

next preceding the filing of this bill of complaint, and without leave of or license from plaintiff, and in defiance of said patents and each of them and of plaintiff's rights thereunder, the said The Osgood Company has made and/or caused to be made and has used and has sold, and is now making, using and selling, within said Northern District of Ohio, Western Division, and elsewhere within the United States of America, numerous excavating machines embodying the inventions described and claimed in and patented by said patents Nos. 1,317,431, 1,511,114 and 1,543,250, and each of them, in infringement of said patents and each of them; and particularly in infringement of claim 4 of said patent No. 1,317,431 of claims 6, 7, 8, 9, 10, 11, 12, 13 and 14 of said patent No. 1,511,114 and of claims 1, 2, 3, 4, 5, 6, 9 and 10 of said patent No. 1,543,250, all as by reference to the accompanying affidavit of Robert Rex Downie together with the exhibits attached thereto will more fully appear.

XVI. Defendant has derived and continues to derive unlawful gains and profits from said infringement, and plaintiff has suffered and is threatened with irreparable damage by reason of said infringement. Defendant threatens to continue all of said acts above complained of. Defendant by its acts aforesaid has impaired plaintiff's enjoyment of its exclusive rights and privileges granted upon issue of said letters patent, and each of them, and has unjustly deprived plaintiff of large profits which it would have realized and enjoyed from said inventions except for defendant's infringement.

XVII. The inventions of the aforesaid patents are susceptible of conjoint embodiment and use in one and the same construction, and have been so conjointly embodied and used in the machines made and sold by defendant as aforesaid.

XVIII. Plaintiff has given notice to the public that its machines are patented by fixing thereon the word "patented" together with the day and year each of its aforesaid patents was granted. Plaintiff has also specifically notified defendant of said patents and of plaintiff's ownership thereof and of the infringements complained of, but said defendant has continued and will unless restrained continue its acts complained of notwithstanding and in spite of said notice.

WHEREFORE plaintiff prays:

(a) That the defendant, The Osgood Company, be directed to appear and answer this bill of complaint (but not under oath, answer under oath being expressly waived), and to abide by and perform such orders and decrees as the court may deem proper.

(b) That the defendant, The Osgood Company, and its officers, agents, servants, employees, and all persons in privity with them and each of them, be enjoined and restrained *pendente lite*, by decree and injunction of this court, from directly or contributorily infringing plaintiff's said patents Nos. 1,317,431, 1,511,114 and 1,543,250, and each of them.

(c) That the defendant, The Osgood Company, and its officers, agents, servants, employees, and all persons in privity with them; and each of them, be enjoined and restrained perpetually, by decree and injunction of this court, from directly or contributorily infringing plaintiff's said patents Nos. 1,317,431, 1,511,114 and 1,543,250 and each of them.

(d) That the defendant, The Osgood Company, be required to account to plaintiff for the profits realized by defendant and the damages to plaintiff in the premises; and that this cause be referred to a Master to take an accounting of said profits and damages; and that such damages be increased to three times the amount thereof or as to the Court may seem meet in view of all the circumstances.

(e) That said defendant be decreed to pay the costs and disbursements of this suit to be taxed.

(f) And that plaintiff have such other and further relief as to the court may seem meet.

KEYSTONE DRILLER COMPANY,
ROBERT REX DOWNIE,
Secretary.

GEO. E. KIRK, *Solicitor.*
RICHEY & WATTS, *Solicitors.*
PHILIP E. SIGGERS, *Of Counsel.*

Verification.

STATE OF OHIO,
COUNTY OF CUYAHOGA, SS:

Robert Rex Downie being duly sworn, deposes and says that he is Secretary and General Manager of the corporation, Keystone Driller Company, the plaintiff named in the foregoing bill of complaint; that he has read this bill; that the facts pleaded in this bill are within his knowledge and are true, except where alleged on information and belief and so far as they are alleged on information and belief, he is informed and that he verily believes them to be true.

ROBERT REX DOWNIE.

Subscribed and sworn to before me this 7th day of February, 1929.

FLORENCE ANN KOFSKY,
Notary Public.

(Notarial Seal).

PRINTER'S NOTE:

Copies of U. S. Patents Nos. 1,543,250 and 1,511,114 to R. R. Downie, and No. 1,317,431 to LeRoy P. Clutter were attached to this Bill of Complaint, but same have been omitted at this point, as they are listed as a part of Defendant's Exhibit No. 62.

There was also attached to the Bill of Complaint:

(1) A copy of the Final Decree in the case of *Keystone Driller Company vs. The Byers Machine Company and Byers Machine Company,* being Equity No. 2084 in the U. S. District Court, Northern District of Ohio, Eastern Division, and

(2) A copy of the Opinion of Judge Jones in the same case.

Reproduction of said Decree and Opinion at this point has been omitted to comply with the Equity Rule against duplication. For substance of same see copies attached to Bill of Complaint in case No. 964, on pages 10 and 14 of this Record.

PLAINTIFF'S INTERROGATORIES.

(Filed Feb. 9, 1929.)

[Case No. 965]

Now comes the Plaintiff and presents the following interrogatories under the Equity Rules in such cases made and provided, to be answered in writing and under oath by an officer or employee of the Plaintiff in authority, having knowledge of the facts inquired about:

(1) Did The Osgood Company, the Defendant in this case, issue the catalogs attached hereto and marked Exhibits 1 and 2 between June 23, 1925 and February 7, 1929?

(2) Did The Osgood Company issue the paper entitled "The Osgood Pictorial News" marked Exhibit No. 3, attached hereto, between June 23, 1925 and February 7, 1929?

(3) Did The Osgood Company write and dispatch the letter to Frank L. Sessions, dated November 2, 1927 and marked Exhibit No. 4, on or about November 2, 1927?

(4) Was George Day the Assistant Sales Manager of The Osgood Company about November 2, 1927?

(5) Did The Osgood Company make, sell and/or use at Marion, Ohio, or elsewhere in the Northern District of Ohio, Western Division, between June 23, 1925 and February 7, 1929 "The Back Hoe" illustrated at pages 20, 21 and the upper right-hand corner of page 23, of Exhibit No. 1, attached hereto, described on pages 20 and 21 of said Exhibit No. 1, and illustrated in Exhibit Nos. 2 and 3 attached hereto?

(6) Are the "Back Hoes" referred to in Exhibit No. 4 those illustrated and described at pages 20, 21 and illustrated on page 23 of Exhibit No. 1 and in Exhibits 2 and 3, attached hereto?

(7) Was the Defendant, The Osgood Company, making, selling and/or using, or offering for sale or use, "Back Hoes" such as are illustrated and described at pages 20, 21 and illustrated on page 23 of Exhibit No. 1 and in Exhibits 2 and 3, between January 1, 1929 and February 7, 1929?

(8) Did Defendant receive the letters, copies of which are attached to the affidavit of Philip E. Siggers filed herewith and marked Exhibits 5, 6 and 7, about or within a few days after said copies are dated?

(Note) Exhibit No. 1 is marked Bulletin No. 2620.
Exhibit No. 2 is marked Bulletin No. 2624.

KEYSTONE DRILLER COMPANY,
RICHEY & WATTS,
Solicitors.

GEO. E. KIRK,
SIGGERS & ADAMS,
Of Counsel.

It is so ordered.

GEO. P. HAHN,
U. S. District Judge.

PRINTER'S NOTE:

The original Copy of the Plaintiff's Interrogatories above had attached to it as Exhibits 1, 2, 3, 4 and 8, respectively, the following items: Osgood Bulletin No. 2620; Osgood Bulletin No. 2624; Paper entitled "The Osgood Pictorial News"; Letter from The Osgood Co. to Frank L. Sessions and Photograph No. 3364 of Excavator.

The letter, Exhibit 4, was as follows:

EXHIBIT NO. 4.

THE OSGOOD COMPANY

Marion, Ohio, U. S. A.
November 2nd, 1927.

Frank L. Sessions,
Consulting Engineer,
Rockefeller Building,
Cleveland, Ohio.

Dear Sir:

Are very glad to get your letter of November 1st, and in response we send you under separate cover today a copy of our Bulletin #2621, which illustrates the Osgood 1 Yard Heavy Duty Steam Driven Revolving Shovel, Clamshell Outfit, Dragline Rig or Crane, mounted upon Continuous Treads (Caterpillars).

We also forward you our Bulletins #2620 and #2624, which show and describe respectively the Osgood 1-Yard and 1¼ Yard Revolving Units, available for use.

as shovels, clamshell outfits, dragline rigs, back hoes or cranes, these machines being driven by either gas engine or single electric motor, and mounted upon Continuous Treads.

The copy of Osgood Pictorial News, which we attach, will show you some interesting views of our machines variously equipped, working in many different parts of the country.

The Photograph #3364 will particularly interest you, perhaps, as it shows the Osgood 1 Yard Gas Machine equipped as a back hoe. Rigged in this manner, we have Osgoods working all over the country, digging ditches of various sizes, and any place where a trench machine, that is—the ladder type machine, will not work, due to the hardness of the ground or the presence of boulders, etc., then this back hoe of ours is, we think, the most efficient tool which can be used.

Of course, in addition to digging ground which the trench machine cannot dig, it will do anything that a trench machine will do, and some things that the trench machine will not do, and because of its ability to dig both hard and soft ground, and to excavate trenches of various widths and depths; it is coming into great favor among sewer diggers and contractors who specialize in laying water mains, throughout the country.

The Photograph #3394 gives a good view of an Osgood 1 Yard Gas Machine as a shovel. This illustration will make it clear that the Osgood Gas Outfit can move rock as it does clay, gravel, and other materials. We speak of this because there was a feeling at the time the gas shovel was brought out, that while it might do in soft material, yet it might not handle rock to good advantage. Insofar as the Osgood Machine is concerned, this has not proven to be the case as our rig is handling rock at many different points in an economical way.

The Photograph #3353 shows another Osgood Gas Machine arranged as a crane. You will note that this unit also handles a clamshell bucket, the bucket being shown alongside the machine, this particular outfit excavating for the large sewer and then switching over from handling the clamshell bucket to handling the concrete bucket, depositing the concrete into the form.

Our Machine is equally efficient as a dragline outfit, doing ditch work, that is open drainage ditch work, in a number of different instances, at satisfactory cost to the owner.

Are not sure, Mr. Sessions, as to whether you are a contractor, as well as a consulting engineer, but whether you are interested in a steam, gas or electrically driven revolving outfit for yourself or for your clients, we are glad of course to put this preliminary information in your hands, and it will be a distinct pleasure to call upon you the first time our Mr. B. F. Tedlie is in Cleveland, which we expect will be either the latter part of this, or the first of next week, so we may have the pleasure of going into this with you in more detail.

In the meantime, should it happen that you are immediately interested in price and full particulars covering any of the types of Osgood shown, please let us know, and we will instantly write you giving specific information upon the machines you are interested in.

Awaiting the opportunity to serve you further, we are

Yours truly,

THE OSGOOD COMPANY,
GEO. DAY,
Asst. Sales Manager.

GD:TIG
Inc. OPN
Photo #3364
Photo #3394
Photo #3353

AFFIDAVIT OF ROBERT REX DOWNIE.

(Filed Feb. 9, 1929.)

[Case No. 965]

STATE OF OHIO,
COUNTY OF CUYAHOGA, SS.:

ROBERT REX DOWNIE, being duly sworn, deposes and says:

I am Secretary and General Manager of the Plaintiff Company and experienced in machines to which this suit relates and in the operation of the same. I testified in the case of Keystone Driller Company vs. The Byers

Machine Company and Byers Machine Company, which was tried in the Eastern Division of the Northern District of Ohio, and which is referred to in the Bill of Complaint herein.

I have long known of The Osgood Company of Marion, Ohio, the Defendant in this case, which is one of the competitors of the Plaintiff and the two Byers Companies.

I have examined the "Back Hoe" illustrated and described on pages 20 and 21 and illustrated on page 23 of Bulletin No. 2620 of The Osgood Company, marked "Exhibit 1" and attached to the Plaintiff's interrogatories filed herewith. I have also examined the same machine illustrated in Exhibits 2, 3 and 8 attached to said Plaintiff's interrogatories. I have seen a number of these machines in operation at various times and various places in the northeastern part of the United States within the last two years, performing work of various kinds including the digging of trenches and ditches, digging in rocky ground, etc. I have examined the machines very closely at these times. Within the last week I saw one of these machines at Bloomfield, New Jersey. All of the Defendant's machines, which I saw, contained the elements, or the equivalents thereof, of the Plaintiff's commercial and Byers machines and, in my opinion, contained the elements or the equivalents thereof, recited in the claims of the patents relied upon here. All of the Defendant's machines which I saw operated, operated precisely like and performed all of the important and most of the other functions of the machines of the patents in suit, the Plaintiff's machine and the machines of the two Byers Companies which were held to infringe by His Honor Judge Jones in the Cleveland case. In my opinion, the Defendant Osgood machines, the Plaintiff's commercial and the Byers' commercial machines are the same in substance. All are used for the same purpose and in competition with each other.

I am informed and believe that the machines illustrated in Exhibits 1, 2 and 3, which I saw operating, were manufactured and sold by The Osgood Company at Marion, Ohio. Name plates bearing the words, "The Osgood Company, Marion, Ohio" were attached to the machines I saw and to which I refer. I am further informed and believe that The Osgood Company is now manufacturing, advertising for sale and preparing to continue to manufacture and sell the machines illustrated in Exhibits 1, 2, 3 and 8, all at Marion, Ohio.

The Osgood Company, the Defendant herein, has been notified not only of its infringement of the patents, but of the opinion of Judge Jones and the decree entered in the Cleveland case. The Defendant has continued to infringe the patents and I am informed and believe, is threatening to continue to infringe them notwithstanding such notices.

Plaintiff developed the machines covered by the patents not only mechanically but commercially. Plaintiff built up the business in these machines from nothing to a large number over a period of years. During this development, the Plaintiff also developed the factory, sales and other organization facilities necessary to take care of the business in these machines. After the infringement of this Defendant began, the business of the Plaintiff in these machines declined and it now finds itself with a surplusage of manufacturing, sales and other organization facilities which it will be unable to maintain and continue unless the infringement of the Defendant is abated. During the year before the infringement of the patents in suit became destructive of Plaintiff's sales, the Plaintiff made about Three Hundred Thousand Dollars ($300,000.00) on the patented machines and the handling machines which are sold with them. During 1928, this profit had been cut down to about Thirty Thousand Dollars ($30,000.00) by the infringers of whom the Defendant was and now is one. In addition to this loss of profits Plaintiff has suffered damages from such infringement which it is difficult to estimate. Every time the Defendant sells an infringing machine, a new infringer is created in the user, whom it is difficult to pursue and from whom it is difficult to recover for the infringement. Other manufacturers, seeing the infringement of this Defendant, have been encouraged by Defendant's infringement and have also infringed the patents, and others undoubtedly will follow unless Defendant is enjoined. The present organization and equipment of the Plaintiff is more than ample to supply the demand of the public for these machines. Unless the infringement of the patents can be abated, the Plaintiff will be obliged to reduce its establishment and organization on account of the infringing competition. On the other hand, as shown by the catalogs, the Defendant manufactures many other types of excavating machinery, which it can continue to make and sell even though enjoined from infringing the patents in suit. Issue of the pre-

liminary injunction asked for will merely restore Defendant to its pre-infringing status.

The suit in Cleveland was instituted in Dec. of 1926 was tried in 1927 before His Honor Judge Westenhaver, but due to Judge Westenhaver's sickness and death, the case was not decided until January, 1929, so that there has unfortunately and unavoidably already been unusual delay in proceeding to enforce the patents. Plaintiff has proceeded as fast as it could under the circumstances.

Unless the Preliminary Injunction here asked for is granted, the Plaintiff will suffer irreparable damages.

ROBERT REX DOWNIE.

Subscribed and sworn to before me this 7th day of February, 1929.

FLORENCE ANN KOFSKY,
Notary Public.

(Notarial Seal)

AFFIDAVIT OF PHILIP E. SIGGERS.

(Filed Feb. 9, 1929.)

[Case No. 965]

COUNTY OF CUYAHOGA,
STATE OF OHIO, ss.

Philip E. Siggers, being duly sworn, deposes and says that he is of counsel for the Keystone Driller Company, plaintiff in this case; that on November 10, 1927, he notified The Osgood Company of Marion, Ohio, defendant in this case, by letter, of its infringement of patents Nos. 1,317,431, 1,511,114 and 1,543,250 and of the ownership of said patents by the plaintiff; that Exhibit 5, attached hereto is a true copy of the letter sent defendant on November 10, 1927; that defendant acknowledged in writing receipt of the notice; that on January 24, 1929, he notified defendant by letter which he

deposited in the mails that day of the opinion of January 23, 1929 of the District Court of the United States for the Northern District of Ohio, Eastern Division sustaining the validity of claim 4 of patent No. 1,317,431, claims 1 to 14 inclusive of patent No. 1,511,114, and claims 1 to 10 inclusive of patent No. 1,543,250; that attached Exhibit 6 is a true copy of the notification of January 24, 1929; that said defendant, to his personal knowledge, was notified of its infringement of patents Nos. 1,317,431, 1,511,114 and 1,543,250 and also of the intention of the Keystone Driller Company to bring suit shortly and ask for preliminary injunction, said notification being by letter dated and mailed January 31, 1929 from the office of F. O. Richey, Cleveland, Ohio, also of counsel for plaintiff; that attached Exhibit 7 is a true copy of the notification of January 31, 1929; and that defendant, The Osgood Company, has never to his knowledge, offered to settle for past infringement, nor has it ceased its infringing acts but on the contrary it has continued to make offers to sell machines infringing claims held valid by decree of the District Court of the United States for the Northern District of Ohio, Eastern Division.

PHILIP E. SIGGERS.

Sworn to and subscribed before me this 7th day of February 1929.

FLORENCE ANN KOFSKY,
Notary Public.

(Notarial Seal)

EXHIBIT 5.

COPY

November 10, 1927.

The Osgood Co.,
Marion, Ohio.

Re: File 1159 Osgood

Gentlemen:—

This is to notify you formally of your infringement of the following patents owned by the Keystone Driller Company:

1,511,114	Downie	October 7, 1924
1,317,431	Clutter	September 30, 1919
1,543,250.	Downie	June 23, 1925

Since obtaining title to the above patents, the Keystone Driller Company has notified the public of its rights by attaching to each of its machines metal plates bearing the dates (and recently the numbers also) of said patents, as well as of other patents owned by it. As a member of the public, you have thus received constructive notice of the rights of the Keystone Driller Company arising from the issue of the above-identified patents. Furthermore, Keystone Driller machines bearing patent notices have been exhibited at the Chicago road shows for a number of years past.

As you well know, the Keystone Driller Company is now prosecuting a suit for infringement of the above-named patents against the Byers Machine Company in the United States District Court in Cleveland. You have aided the Byers Company in its defense by sending a witness (your Mr. Sauer) to Cleveland; and in open court he has admitted your present infringement. Unless you are prepared to make an accounting for past infringement, or unless you enter into some amicable agreement with the Keystone Driller Company, a suit for infringement may be brought against you to recover profits or damages and to obtain injunctive relief.

A written response to this letter is requested.

Very truly yours,

PES:B Signed—PHILIP E. SIGGERS.

EXHIBIT 6.

COPY

January 24, 1929

The Osgood Company, Marion, Ohio.

Re: File 1159

Gentlemen:—

We are writing merely to inform you of the decision of the District Court of the United States for the Northern District of Ohio, Eastern Division, at Cleveland, upholding the validity of the following claims of patents owned by the Keystone Driller Company:

Claim 4 of Clutter patent	1,317,431
Claims 6 and 7 of Wagner et al.	1,476,121
Claims 1-14 incl. of Downie	1,511,114
Claims 1-10 incl. of Downie	1,543,250

All these claims were held to be infringed by Byers Machine Company. None of the claims sued on was held invalid.

A copy of the court's decision may be obtained from the clerk of the court at Cleveland, from this office or from the Keystone Driller Company, Beaver Falls, Pa.

Very truly yours,

PES:B Signed—SIGGERS AND ADAMS.

EXHIBIT 7.

COPY

January 31, 1929

Osgood Company, Marion, Ohio.

Gentlemen:—

This will follow the letter of January 24, 1929 written to you by Siggers & Adams from Washington, D. C., and is written in connection with that letter and also the letter of Philip E. Siggers of November 10, 1927 to you. This letter is, as those letters were, written at the direction of the Keystone Driller Company and is for the purpose of advising you that you are infringing the following patents owned by the Keystone Driller Company:

Clutter	No. 1,317,431
Downie	No. 1,511,114
Downie	No. 1,543,250

and further to advise you that we will shortly file a Bill of Complaint against you asking for preliminary injunction, enjoining you from infringing the above named patents which, as Siggers & Adams wrote you, have been sustained by His Honor Judge Jones in the United States District Court for the Northern District of Ohio, unless in the meantime you agree to discontinue your infringement and make suitable settlement for past infringement.

Very truly yours,

Signed—F. O. RICHEY.

MOTION FOR PRELIMINARY INJUNCTION.

(Filed Feb. 9, 1929.)

[Case No. 965]

To the Honorable Judges of the United States District Court for the Northern District of Ohio, Western Division:

Now comes the Plaintiff, and moves this Court, on the Bill of Complaint, the affidavits of Robert Rex Downie and Phillip E. Siggers and the records and exhibits, the pleadings, the opinion and the decree in the case of Keystone Driller Company vs. The Byers Machine Company and Byers Machine Company, which was instituted, pended, tried and decided in the Eastern Division of the Northern District of Ohio, for preliminary injunction restraining the Defendant, its confederates, associates, servants, attorneys, agents, clerks and workmen, as prayed for in the Bill of Complaint, from further infringing Letters Patent of the United States to Clutter, No. 1,317,431. Downie, 1,511,114 and Downie, 1,543,250, and for such other and further relief as may seem adequate to the Court.

Plaintiff shows in support of this motion that the title of the said patents as shown in the suit in the Eastern Division of the Northern District, is in the Plaintiff and that the said patents were sustained by His Honor Judge Paul Jones in the Eastern Division of the Northern District of Ohio, and that as shown by the affidavits of Robert Rex Downie and Phillip E. Siggers, and the Bulletins of the Defendant filed with the Bill of Complaint, that the Defendant is infringing claims which were held valid in said case of the Plaintiff vs. The Byers Machine Company and Byers Machine Company as aforesaid.

Plaintiff files herewith an Order to Show Cause why this motion should not be granted and such injunction issued.

RICHEY & WATTS,
Solicitors for Plaintiff.

GEO. E. KIRK,
SIGGERS AND ADAMS,
Of Counsel for Plaintiff.

Toledo, Ohio, February 8, 1929.

ORDER TO SHOW CAUSE.

(Entered Feb. 9, 1929, by Geo. P. Hahn, Judge.)

[Case No. 965]

Upon reading the Bill of Complaint, now on file, and upon considering the affidavits of Robert Rex Downie and Philip E. Siggers, and the exhibits referred to in the said affidavits and filed herein in support of this motion, and a copy of the opinion and decree of Judge Paul Jones in the case of the Keystone Driller Company vs. The Byers Machine Company and Byers Machine Company it is ordered:

That the Defendant show cause, if any it has, before this Court, at a session thereof to be held in the City of Toledo, State of Ohio, on the 25th day of February, 1929, at 9:30 o'clock forenoon, or as soon thereafter as counsel can be heard, why a preliminary injunction should not issue pursuant to the prayer of said Bill of Complaint;

That copies of the said Bill of Complaint and of Plaintiff's motion papers and affidavits be served upon Defendant with this order;

That Defendant serve copies of all papers proposed to be used in opposition to the motion for a preliminary injunction upon Plaintiff's solicitors, Richey & Watts, 766 Union Trust Bldg., Cleveland, Ohio, by leaving said copies at said office or by mailing them by registered mail so as to reach said office at or before 4:00 P. M., February 18th, 1929;

And that Plaintiff serve copies of all papers in rebuttal upon Defendant, not later than the second day preceding the above named return day of this order;

That service of copies of this order and the attached affidavits upon counsel for Defendant on or before the 11th day of February, 1929, be deemed sufficient service.

GEO. P. HAHN,
United States District Judge.

Toledo, Ohio, February 9th, 1929.

ORDER MODIFYING THE DATES IN THE ORDER TO SHOW CAUSE.

(Entered Feb. 16, 1929, by Geo. P. Hahn, Judge.)

[Case No. 965]

It is hereby ordered that the Defendant's time for serving copies of all papers proposed to be used in opposition to the Motion for a Preliminary Injunction upon Plaintiff's solicitors, Richey & Watts, 766 Union Trust Bldg., Cleveland, Ohio, by leaving said copies at said office or mailing them by registered mail so as to reach said office, be extended to 4:00 P. M., February 25, 1929; the time for serving copies of Plaintiff's rebuttal papers be extended until March 5, 1929 and the hearing which is now set for the 25th day of February upon the Motion for a Preliminary Injunction be postponed until March 8, 1929.

GEO. P. HAHN,
United States District Judge.

We assent to the entry of the above order.

RICHEY & WATTS,
Solicitors for Plaintiff.

EDWIN P. CORBETT,
Solicitor for Defendant.

GEDDES, SCHMETTAU, WILLIAMS, EVERSMAN & MORGAN,
Solicitors for Defendant.

ORDER MODIFYING THE DATES IN THE ORDER TO SHOW CAUSE.

(Entered Feb. 20, 1929, by Geo. P. Hahn, Judge.)

[Case No. 965]

It is hereby ordered that the Defendant's time for serving copies of all papers proposed to be used in opposition to the Motion for a Preliminary Injunction upon Plaintiff's solicitors, Richey & Watts, 766 Union Trust Bldg., Cleveland, Ohio, by leaving said copies at said office or mailing them by registered mail so as to reach said

office, be extended to 4:00 P. M., March 11, 1929; the time for serving copies of Plaintiff's rebuttal papers be extended until March 19, 1929, and the hearing which is now set for the 8th day of March upon the Motion for a Preliminary Injunction be postponed until March 22, 1929.

GEO. P. HAHN,
United States District Judge.

OBJECTIONS TO PLAINTIFF'S INTERROGATORIES.

(Filed Feb. 26, 1929.)

[Case No. 965]

Each and all of the Interrogatories filed herein by plaintiff are objected to because of the fact that the Bill of Complaint prays for "trebled damages." Increased damages are in the nature of a penalty, and it is a settled law that a Court of Equity will not compel discovery by the party if such discovery may subject such party to a penalty.

The defendant, therefore, respectfully requests the Court, that an order be entered to the effect, that the defendant need not answer any of the Interrogatories propounded by plaintiff herein unless and until all claims for any such increased damages be abandoned by plaintiff and withdrawn from its Bill of Complaint.

Respectfully submitted,
EDWIN P. CORBETT,
Attorney for Defendant.

LLOYD I. WILLIAMS,
Solicitor for Defendant.

PLAINTIFF'S ANSWER TO DEFENDANT'S OBJECTION TO PLAINTIFF'S INTERROGATORIES.

(Filed Mar. 5, 1929.)

[Case No. 965]

Plaintiff's Interrogatories are, in accordance with General Equity Rule 58, directed to an officer or employee of a corporation, a different party from the corporation itself.

Defendant objects to the Interrogatories on the grounds that treble damages are asked for against the Defendant, a corporation, in the Bill of Complaint and therefore the action is penal.

The Plaintiff is one party, the Defendant is another party and the officer or employee to whom the Interrogatories are directed is a third party, distinct from each Plaintiff and Defendant.

While it may be well established that the Defendant in a patent case against whom treble damages are asked may not be required to answer interrogatories on the grounds that the action is penal, it is equally well established that a third party, such as an officer of a corporation can not be excused from answering Interrogatories because the complaint asks for treble damages of the corporation.

This general rule of law was stated by Mr. Justice Brown for the Supreme Court of the United States, in *Hale vs. Hinkle,* 201 U. S. 43, 50 Fed. 652, 663, as follows:

> "It was never intended to permit him to plead the fact that *some third person might be incriminated by his testimony,* even though he were the agent of such person. A privilege so extensive might be used to put a stop to the examination of every witness who was called upon to testify before the grand jury with regard to the doings or business of his principal, whether such principal were an individual or a corporation. The question whether a corporation is a 'person' within the meaning of this amendment really does not arise, except, perhaps where a corporation is called upon to answer a bill of discovery, since it can only be heard by oral evidence in the person of some one of its agents or employees. The amendment is limited to a person who shall be compelled in any criminal case to be a witness against himself; *and if he cannot set up the privilege*

of a third person, he certainly cannot set up the privilege of a corporation."

The rule thus expressed was applied to Interrogatories in a patent case by Judge Learned Hand in the Southern District of New York, in *Grasselli vs. National,* 282 Fed. 378, to quote the syllabus as follows:

"In a suit for infringement of a patent, and for treble damages, the defendant's claim of privilege to refuse to answer interrogatories as to infringement, on the ground that the action was penal, cannot be considered; the defendant being a corporation."

See also, *Smith v. Interstate,* 245 U. S. 42. *Livesey vs. United States,* 279 Fed. 499. *United Mine Workers v. Coronado Coal Company,* 258 Fed. 834. *In Re, Rosenwasser,* 254 Fed. 173, *Nekossa v. News,* 182, N. W. 922.

We see no need of an oral hearing on these objections or of waiting until the 22nd day of March for a disposition of the matter.

Respectfully submitted,
RICHEY & WATTS,
Solicitors for Plaintiff.

We have mailed a copy of this answer to Mr. Edwin P. Corbett, counsel for the defendant.

RICHEY & WATTS.

STIPULATION EXTENDING TIME TO ANSWER UNTIL APRIL 3, 1929.

(Filed March 9, 1929.)

[Case No. 965]

It is hereby stipulated by and between Counsel for the respective parties, the Honorable Court consenting, that the time for filing answer herein may be, and hereby

is extended thirty (30) days or to and including April 3, 1929.

RICHEY & WATTS,
Attorneys for Plaintiff.

Dated March 2, 1929.

EDWIN P. CORBETT,
Attorney for Defendant.

Dated February 28, 1929.

Consent to the above extension is hereby granted.

GEO. P. HAHN,
District Judge.

March 9, 1929.

ORDER MODIFYING THE DATES IN THE ORDER TO SHOW CAUSE.

(Entered March 9, 1929, by Geo. P. Hahn, Judge.)

[Case No. 965]

It is hereby ordered that the Defendant's time for serving copies of all papers proposed to be used in opposition to the Motion for a Preliminary Injunction upon Plaintiff's solicitors, Richey & Watts, 766 Union Trust Building, Cleveland, Ohio, by leaving said copies at said office or mailing them by registered mail so as to reach said office, be extended to 4:00 P. M., March 25, 1929; the time for serving copies of Plaintiff's rebuttal papers be extended until April 2, 1929, and the hearing which is now set for the 22nd day of March upon the Motion for a Preliminary Injunction be postponed until April 8, 1929.

GEO. P. HAHN,
United States District Judge.

March 19, 1929.

ORDER EXTENDING PLAINTIFF'S TIME FOR SERVING REBUTTAL PAPERS.

(Entered March 28, 1929, by Geo. P. Hahn, Judge.)

[Case No. 965]

It is hereby ordered that the plaintiff's time for serving copies of rebuttal papers proposed to be used in the matter of the motion for a preliminary injunction be extended from April 2, 1929, to April 16, 1929, and the hearing which is now set for the 8th of April, 1929, upon the motion for a preliminary injunction be postponed until April 22, 1929.

GEO. P. HAHN,

March 28, 1929. *United States District Judge.*

Approved as to form:

LLOYD I. WILLIAMS,

Of Counsel for Defendant.

ANSWER OF THE OSGOOD COMPANY.

(Filed April 3, 1929.)

[Case No. 965]

Answer of The Osgood Company to the bill of complaint of the Keystone Driller Company in the above entitled cause:

I.

The defendant has no knowledge, save by the bill of complaint, and therefore denies that the plaintiff is a corporation of the State of Pennsylvania having its principal place of business at Beaver Falls, Pennsylvania, and that it is a citizen and inhabitant of said state.

II.

Defendant admits that it is a corporation of the State of Ohio, having its principal place of business at Marion, Marion County, Ohio, and that it is a citizen and inhabitant of said State of Ohio and of the Northern District of Ohio, Western Division.

III.

Defendant admits that the Court's jurisdiction in this cause is based upon the ground that the suit is one for alleged infringement of United States patents, and that the defendant is an inhabitant of the Northern District of Ohio, Western Division, and that it has a regular and established place of business in said district, but denies that it has committed acts of infringement in said district or elsewhere, or that plaintiff is entitled to equitable relief, or any relief herein.

IV.

Defendant admits that on February 11, 1915, Le Roy P. Clutter filed in the United States Patent Office an application for Letters Patent, on Ditching or Excavating Machines, but defendant denies all of the other allegations of paragraph III of said bill of complaint.

V.

Defendant admits that upon September 30, 1919, United States Letters Patent No. 1,317,431 was issued to said Le Roy P. Clutter upon said application for Ditching or Excavating Machines, but defendant denies all of the other allegations of paragraph IV of the bill of complaint.

VI.

Defendant has no knowledge, save by bill of complaint, of the allegations contained in paragraph V, and therefore denies the same, and leaves the plaintiff to its proof.

VII.

Defendant denies that the alleged invention and improvement described and claimed in said Letters Patent 1,317,431, contains and embodies any material beneficial advance over what has previously been known to those skilled in the art, but, on the contrary, avers the fact to be that the claims of said Letters Patent and each of them are invalid and void on the following grounds:

(a) Because the said Le Roy P. Clutter was not the original and first inventor or discoverer of the invention alleged to be described and claimed in the said Letters Patent, or of any material or substantial part thereof, but that the same, and all material or substantial parts thereof, had been patented or described in patents filed prior to the date of the alleged invention of the said Le Roy P. Clutter; and that said patent is void and invalid because the alleged invention has been patented or described in printed publications prior to said Clutter's supposed invention or discovery thereof, or more than two years prior to his application for a patent therefor, as follows:

UNITED STATES PATENTS

Patentee	*No.*	*Issued*
F. Milliken	433,087	May 26, 1891
G. W. King	580,494	April 13, 1897
A. N. Simmerly	323,538	Aug. 4, 1885
C. Hetlesaeter	659,630	Oct. 9, 1900
E. S. Robertson	929,168	July 27, 1909
J. W. Dutton	776,125	Nov. 29, 1904
O. J. Martinson	976,088	Nov. 15, 1910
S. M. Bishop	1,100,864	June 23, 1914
O. N. Gardner	1,077,467	Nov. 4, 1913
M. G. Bunnell	1,037,429	Sept. 3, 1912
H. L. & W. Sweet et al.	1,208,230	Dec. 12, 1916
L. P. Clutter	1,288,514	Dec. 24, 1918
	(Filed Aug. 29, 1913.)	
D. H. Mahoney	1,194,204	Aug. 8, 1916
	(Filed Feb. 10, 1915.)	

FOREIGN PATENTS.

Great Britain	H. W. J. Cheffins	6266 of 1889

PUBLICATIONS.

Pages 318-319, Engineering News, March 16, 1911.

Also in many other Letters Patent and printed publications not known to the defendant but, which when discovered hereafter, defendant prays leave of the Court to furnish and concerning which defendant prays leave to incorporate data in this, its Answer, by suitable amendment thereof.

(b) Because, in view of the state of the art in respect to the device disclosed and claimed in said Letters

Patent, prior to, or at the time of, the alleged invention of the said Le Roy P. Clutter, as described and claimed in Letters Patent No. 1,317,431, the supposed improvement described and claimed in said Letters Patent was not a patentable invention, discovery or improvement, but comprised mere selections and adaptations from prior known structures requiring no invention but being within the domain of mere judgment and mechanical skill.

VIII.

Defendant avers that the alleged invention and improvement described and claimed in said Letters Patent 1,317,431, and all substantial and material parts thereof were publicly known to and used by the following persons at the places indicated prior to any invention thereof by the said Le Roy P. Clutter, and more than two years prior to the filing of an application for said Letters Patent.

A "Libbe Excavator" manufactured by J. H. W. Libbe, of Toledo, Ohio, first used publicly at Cincinnati, Ohio, by J. H. W. Libbe. This machine was later sold to Smith & Paxton at Columbus, Ohio. Both the use and sale of this machine occurred more than two years prior to the filing date of the Clutter patent in suit.

An excavator which was manufactured by The Vulcan Iron Works Company of Toledo, Ohio, and which was publicly used by said company at Toledo, Ohio.

A "Gopher Traction Dry-Land Ditching Machine," manufactured by the Dix Machine Company of Stillwater, Minn., which was publicly used at Hugo, Minnesota, by the said Company.

A "Back Acting Shovel" manufactured by the Marion Steam Shovel Company of Marion, Ohio, which was publicly used by the Charleston South Carolina Mining & Manufacturing Company of Fetteressa, S. C., at Barstow, Florida.

An "E. O. Rood Ditcher Machine" owned by James McGinnis of Champaign, Illinois, which was publicly used by said McGinnis in Champaign County, Illinois.

A "Rood Excavating Machine" manufactured by the Rood Construction Company of Grand Rapids, Wisconsin, which was publicly used at Coal City, Illinois, by Charles W. Rood.

A "Fairbanks Dry Land Excavator," owned by George A. Castle of Crookston, Minnesota, which was publicly used by said Castle in Polk County, Minnesota.

Daniel H. Mahoney of North Bend, Ohio, at Vincennes, Ind.

And to and by others whose names and residences, and the place of use or knowledge by them defendant begs leave to set up herein by amendment or otherwise when it has more fully ascertained the same.

IX.

Defendant admits that on June 27, 1921, Robert Rex Downie made application for United States Letters Patent on alleged Improvements in Excavating Machines, but defendant denies all of the other allegations of paragraph VI of the bill of complaint.

X.

Defendant has no knowledge, save by bill of complaint, of the allegations contained in paragraph VII, and therefore denies the same, and leaves the plaintiff to its proof.

XI.

Defendant admits that upon October 7, 1924, United States Letters Patent, No. 1,511,114, was issued to the Keystone Driller Comany upon said Downie application for alleged Improvements in Excavating Machines, as alleged assignee of said Robert Rex Downie, but defendant denies all of the other allegations of paragraph VIII of the bill of complaint.

XII.

Defendant denies that the alleged invention and improvement described and claimed in said Letters Patent 1,511,114, contains and embodies any material beneficial advance over what has previously been known to those skilled in the art, but, on the contrary, avers the fact to be that the claims of said Letters Patent and each of them are invalid and void on the following grounds:

(a) Because the said Robert Rex Downie was not the original and first inventor or discoverer of the invention alleged to be described and claimed in the said Letters Patent, or of any material or substantial part thereof, but that the same, and all material or substantial parts thereof, had been patented or described in patents filed prior to the date of the alleged invention of the said Robert Rex Downie; and that said patent is void and invalid because the alleged invention has been patented or described in printed publications prior to said

Downie's supposed invention or discovery thereof, or more than two years prior to his application for a patent therefor, as follows:

UNITED STATES PATENTS.

Patentee	*No.*	*Issued*
S. Hoar	1,322,570	Nov. 5, 1919
M. E. Pugh	806,288	Dec. 5, 1905
H. G. Butler	519,835	May 15, 1894
D. H. Mahoney	1,194,204	Aug. 8, 1916
C. N. Hudson	1,281,379	Oct. 15, 1918
E. J. Keith	1,315,512	Sept. 9, 1919
S. M. Bishop	1,100,864	June 23, 1914
L. P. Clutter	1,317,431	Sept. 30, 1919
J. C. French	1,430,542 (Filed Jan. 26, 1918)	Oct. 3, 1922
C. M. Hoffmeyer	1,385,322 (Filed Mar. 24, 1917)	July 19, 1921
G. A. Morrison et al.	1,249,805	Dec. 11, 1917
B. H. Coffey	745,329	Dec. 1, 1903
J. H. W. Libbe	820,055	May 8, 1906
J. L. Potter	970,750	Sept. 20, 1910
O. J. Olson	826,051	July 17, 1906
J. C. Boehm	999,953	Aug. 8, 1911
W. Shannon	670,210	Mar. 19, 1901
E. J. Davy	508,685	Nov. 14, 1893
N. H. Nelson	842,904	Feb. 5, 1907
G. W. King	580,494	April 13, 1897
J. G. Fairbanks	892,508	July 7, 1908
O. Hetlesaeter	659,632	Oct. 9, 1900
E. Barnes	77,949	May 19, 1868
M. E. Pugh	1,316,058	Sept. 16, 1919
A. N. Cross	808,345	Dec. 26, 1905
G. H. Hulett	495,040	April 11, 1893
V. H. Anderson	1,269,149	June 11, 1918
E. O. Rood	386,438	July 17, 1888
A. N. Cross	418,311	Dec. 31, 1889
G. H. Williams	711,449	Oct. 14, 1902
J. H. W. Libbe	645,175	Mar. 13, 1900
C. L. Baker	881,529	Mar. 10, 1908
R. M. Downie	1,228,654	June 5, 1917
E. J. Armstrong et al.	1,239,554	Sept. 11, 1917
M. E. Pugh	1,339,606	May 11, 1920

FOREIGN PATENTS.

Great Britain	H. W. J. Cheffins	6266 of 1899

PUBLICATIONS.

Pages 318-319, Fig. 2 and description, Engineering News, March 16, 1911.

Page 55 and adjacent page, Marion Steam Shovel Co. catalog, published in 1900.

Pages 158 and 159, Engineering News, of Sept. 5, 1895.

Page 497, The Railway Review, of Sept. 7, 1895.

Pages 158-159, article and Illustrations entitled "Steam Shovels for Trench Excavation and Backfilling," Engineering News, Sept. 5, 1895.

Page 46, of the catalog of The Fairbanks Steam Shovel Co., Marion, Ohio, published 1912.

Also in many other Letters Patent and printed publications not known to the defendant but, which when discovered hereafter, defendant prays leave of the Court to furnish and concerning which defendant prays leave to incorporate data in this, its Answer, by suitable amendment thereof.

(b) Because, in view of the state of the art in respect to the device disclosed and claimed in said Letters Patent, prior to, or at the time of, the alleged invention of the said Robert Rex Downie, as described and claimed in Letters Patent No. 1,511,114, the supposed improvement described and claimed in said Letters Patent was not a patentable invention, discovery or improvement, but comprised mere selections and adaptations from prior known structures requiring no invention but being within the domain of mere judgment and mechanical skill.

XIII.

Defendant avers that the alleged invention and improvement described and claimed in said Letters Patent 1,511,114, and all substantial and material parts thereof were publicly known to and used by the following persons at the places indicated prior to any invention thereof by the said Robert Rex Downie, and more than two years prior to the filing of an application for said Letters Patent.

A "Mahoney Excavating Machine of the Back-Hoe Type," manufactured by The Mahoney Railroad Ditching Machine Co., Vincennes, Indiana, was publicly operated by D. H. Mahoney of North Bend, Ohio, on a farm situated a short distance from the City of Vincennes.

A "J. C. French Swinging Scoop Excavator" was publicly used around Toms River, N. J., by a Clay Company located in the vicinity of Newark, N. J.

A "Keith Ditch Digging Machine," was publicly used around Sikeston, Missouri, by E. J. Keith, such use being more than two years prior to the filing date of the Downie patent in suit.

An excavator which was manufactured by The Vulcan Iron Works Co. of Toledo, Ohio, and which was publicly used by said company at Toledo, Ohio.

A "Back Acting Shovel" manufactured by the Marion Steam Shovel Co. of Marion, Ohio, which was publicly used by the Charleston, South Carolina Mining and Manufacturing Co. of Fetteressa, S. C., at Barstow, Florida.

A "E. O. Rood Ditcher Machine" owned by James McGinnis of Champaign, Illinois, which was publicly used by said McGinnis in Champaign County, Illinois.

A "Fairbanks Dry Land Excavator," owned by George A. Castle of Crookston, Minn., which was publicly used by said Castle in Polk County, Minn.

And to and by others whose names and residences, and the place of use or knowledge by them defendant begs leave to set up herein by amendment or otherwise when it has more fully ascertained the same.

XIV.

Defendant admits that on January 8, 1925, Robert Rex Downie made application for United States Letters Patent on an Excavating Machine, but defendant denies all of the other allegations of paragraph IX of the bill of complaint.

XV.

Defendant has no knowledge, save by the bill of complaint, of the allegations contained in paragraph X, and therefore denies the same, and leaves the plaintiff to its proof.

XVI.

Defendant admits that upon June 23, 1925, United States Letters Patent No. 1,543,250, was issued to the Keystone Driller Company, upon said Downie application for an Excavating Machine, as alleged assignee of the said Robert Rex Downie, but defendant denies all of the other allegations of paragraph XI of the bill of complaint.

XVII.

Defendant has no knowledge, save by the bill of complaint, of the allegations contained in paragraph XII,

and therefore denies the same, and leaves the plaintiff to its proof.

XVIII.

Defendant denies that the alleged invention and improvement described and claimed in said Letters Patent 1,543,250, contains and embodies any material beneficial advance over what has previously been known to those skilled in the art, but, on the contrary, avers the fact to be that the claims of said Letters Patent and each of them are invalid and void on the following grounds:

(a) Because the said Robert Rex Downie was not the original and first inventor or discoverer of the invention alleged to be described and claimed in the said Letters Patent, or of any material or substantial part thereof, but that the same, and all material or substantial parts thereof, had been patented or described in patents filed prior to the date of the alleged invention of the said Robert Rex Downie; and that said patent is void and invalid because the alleged invention has been patented or described in printed publications prior to said Downie's supposed invention or discovery thereof, or more than two years prior to his application for a patent therefor, as follows:

UNITED STATES PATENTS

Patentee	*No.*	*Issued*
C. M. Hoffmeyer	1,385,322	July 19, 1921
D. H. Mahoney	1,194,204	Aug. 8, 1916
S. M. Bishop	1,100,864	June 23, 1914
C. N. Hudson	1,281,379	Oct. 15, 1918
J. G. Fairbanks	1,056,268	Mar. 18, 1913
J. C. French	1,430,542	Oct. 3, 1922
L. P. Clutter	1,317,431	Sept. 30, 1919
M. E. Pugh	1,489,042	April 1, 1924
V. G. Anderson	1,269,149	June 11, 1918
A. N. Cross	418,311	Dec. 31, 1889
A. N. Cross	808,345	Dec. 26, 1905
E. B. & D. S. White	251,394	Dec. 27, 1881
D. S. White	367,567	Aug. 2, 1887
B. C. Clutter	1,561,694	Nov. 17, 1925
(Filed May 26, 1923)		
G. E. Wagner	1,225,537	May 8, 1917
P. Burke	1,474,314	Nov. 13, 1923

C. W. Rood	1,057,457	April 1, 1913
P. Burke	1,562,288	Nov. 17, 1925
	(Filed Aug. 2, 1924)	
J. J. Benedick	876,517	Jan. 14, 1908

Also in many other Letters Patent and printed publications not known to the defendant but, which when discovered hereafter, defendant prays leave of the Court to furnish and concerning which defendant prays leave to incorporate data in this, its Answer, by suitable amendment thereof.

(b) Because, in view of the state of the art in respect to the device disclosed and claimed in said Letters Patent, prior to, or at the time of, the alleged invention of the said Robert Rex Downie, as described and claimed in Letters Patent No. 1,543,250, the supposed improvement described and claimed in said Letters Patent was not a patentable invention, discovery or improvement, but comprised mere selections and adaptations from prior known structures requiring no invention but being within the domain of mere judgment and mechanical skill.

XIX.

Defendant avers that the alleged invention and improvement described and claimed in said Letters Patent 1,543,250, and all substantial and material parts thereof were publicly known to and used by the following persons at the places indicated prior to any invention thereof by the said Robert Rex Downie, and more than two years prior to the filing of an application for said Letters Patent.

A "J. C. French Swinging Scoop Excavator" was publicly used around Toms River, N. J., by a Clay Company located in the vicinity of Newark, N. J.

A "Mahoney Excavating Machine of the Back-Hoe Type," manufactured by The Mahoney Railroad Ditching Machine Co., Vincennes, Indiana, was publicly used by D. H. Mahoney, of North Bend, Ohio, on a farm situated a short distance from the City of Vincennes.

A "Fairbanks Dry Land Excavator," owned by George A. Castle of Crookston, Minn., which was publicly used by said Castle in Polk County, Minn.

And to and by others whose names and residences, and the place of use or knowledge by them defendant begs leave to set up herein by amendment or otherwise when it has more fully ascertained the same.

XX.

Defendant admits that plaintiff is engaged in the manufacture and sale of excavating machines, but defendant is without knowledge as to whether or not said excavating machines embody the alleged inventions covered by the patents in suit or any part thereof, or whether or not the alleged inventions of the patents in suit or each of them are of great utility or value, or whether or not they have come extensively into public use, or whether or not said alleged inventions are of substantial benefit to the public or to the plaintiff, or whether or not the plaintiff has been put to large effort and expense in and about said alleged inventions for the purpose of introducing them into use or supplying embodiments thereof, and therefore denies the same and leaves the plaintiff to its proof. Defendant denies that the business of the plaintiff in this connection is now threatened with irreparable injury or any injury whatsoever by reason of any act or acts of defendant.

XXI.

Defendant has no knowledge, save by bill of complaint, and affidavits filed in this suit, of the allegations contained in paragraph XIV, and therefore denies the same and leaves the plaintiff to its proof.

XXII.

Defendant denies that since the respective dates of issue of said patents Nos. 1,317,431, 1,511,114 and 1,543,250, or since the plaintiff acquired its alleged title and right under said patents, or within six years next preceding the filing of this bill of complaint or at any other time that it has ever without leave or license from plaintiff, or in defiance of said patents or each of them or of any alleged rights of plaintiff thereunder, has made and/or caused to be made, or has used or has sold, or is now making, using or selling within the said Northern District of Ohio, Western Division, or elsewhere within the United States any excavating machines embodying the inventions described and claimed in said patents Nos. 1,317,431, 1,511,114 and 1,543,250 or any of them, or that it has ever infringed either of said patents or any of them, or that it has ever infringed claim 4 of said patent 1,317,431, or that it has ever infringed claims 6, 7, 8, 9, 10, 11, 12, 13 and 14 of said patent No. 1,511,114, or that it has ever infringed claims 1, 2, 3, 4, 5, 6, 9 and 10

of said patent No. 1,543,250, or that it has ever threatened to infringe said patents, or any of the claims thereof, or that it has any intention of so doing, and defendant denies that any affidavits or exhibits filed in this suit or referred to in the bill of complaint will show that defendant infringes said patents in suit.

XXIII.

Defendant denies that it has ever derived, or that it will continue to derive any unlawful gains or profits, or any gains or profits whatsoever from any alleged infringement of the patents in suit, or that the plaintiff has suffered, or is threatened with irreparable damage by reason of any act or acts of defendant, or that defendant has infringed any of said patents in suit or that it is continuing, or that it threatens to continue any act or acts which would constitute infringement, or that defendant has by any act or acts impaired plaintiff's enjoyment of any of its alleged exclusive rights or privileges under said Letters Patent, or any of them, or that it has unjustly or otherwise deprived plaintiff of large profits or any profits whatsoever which plaintiff alleges it would have realized and enjoyed from said alleged inventions except for such alleged infringement.

XXIV.

Defendant denies that the aforesaid patents are susceptible of conjoint embodiment or use in one and the same construction, or that they have been so conjointly embodied or used in machines made or sold by defendant.

XXV.

Defendant has no knowledge, save by the bill of complaint, as to whether or not plaintiff has given notice to the public that its machines are patented by fixing thereon the word "patented" together with the day and year each aforesaid patent was granted, and therefore denies the same and leaves the plaintiff to its proof. Defendant denies that it has ever done, or will, unless restrained, do, or continue to do, any act or acts which could constitute infringement of the patents in suit.

XXVI.

Defendant avers that the application of LeRoy P. Clutter Patent No. 1,317,431, as originally filed, showed and described an inoperative device, and a device lacking in utility.

XXVII.

Defendant avers that claim 4 of the said Clutter Patent No. 1,317,431 is invalid because it is directed to and based upon subject matter that was neither shown nor described in the application at the time of filing of such application.

XXVIII.

Defendant avers that the bill of complaint herein is vague, indefinite, and uncertain, and contains many arguments and many conclusions, and in many instances supports the averments by a statement of evidentiary facts, and in some instances supplements these with the evidence, documents, or affidavits from which they may be found, and by reason of which said bill of complaint violates clause 3 of Equity Rule 25, and should therefore be dismissed.

XXIX.

Defendant avers that the plaintiff having knowledge of defendant's machines for years, knowingly acquiesced in the use thereof by said defendant, and that the plaintiff is, therefore, guilty of laches.

XXX.

Defendant is informed and believes that, while the applications of said Letters Patent Nos. 1,317,431, 1,511,114 and 1,543,250 were pending in the Patent Office of the United States, the applicants for said patents, so limited and confined the claims of said applications under the requirements of the Commissioner of Patents, that said applicants nor their assigns cannot now seek for or obtain a construction for such claims sufficiently broad to cover the construction used by this defendant.

XXXI.

Defendant denies that the plaintiff has any right to a perpetual injunction or to a preliminary injunction upon this suit, and denies that it has in any way trespassed upon any rights of plaintiff whatsoever, and further denies that the plaintiff is entitled to costs, or an account of profits or damages or any damages whatsoever, or to any other or further relief whatsoever.

WHEREFORE, the defendant prays that the bill of complaint herein be dismissed, at the cost of the plaintiff.

LLOYD I. WILLIAMS,
Solicitor for Defendant.

EDWIN P. CORBETT,
Of Counsel.

STIPULATION RE USE OF UNCERTIFIED COPIES OF PATENTS, ETC. AT TRIAL.

(Filed April 9, 1929.)

[Case No. 965]

It is hereby stipulated and agreed by the parties to the above suit as follows:

(1) The Plaintiff is a Pennsylvania corporation, having its principal place of business at Beaver Falls, Pennsylvania and a citizen and inhabitant of said State as pleaded in the Bill of Complaint.

(2) Uncertified printed copies of United States or foreign patents (and where printed copies cannot conveniently be secured, uncertified photostatic or similar copies of United States and foreign patents) may be used with the same force and effect in this case as original or certified copies, subject to correction if error should occur.

(3) Uncertified copies of publications may be accepted in the above entitled case with the same force and effect as certified copies, or the originals, and the dates of the issue and publication of said publications appearing thereon will be accepted as correct, subject to correction if error occur. Each side agrees to furnish the other with copies of publications which it relies upon and to advise the other where the originals may be found.

(4) Exhibits offered in the case may be retained in the possession of the party first producing them subject to inspection by the other party, or the counsel of the other party, upon reasonable notice to the party retaining the exhibits. Such exhibits, however, shall be filed prior to the final hearing in the case or shall be filed at any time therebefore upon the request of opposing counsel.

(5) Each party agrees to furnish copies of all depositions taken by such party in the case to the other party without charge.

RICHEY & WATTS,
Attorneys for Plaintiff.

Cleveland, Ohio,
April .., 1929.

EDWIN P. CORBETT,
Attorney for Defendant.

STIPULATION RE INTERROGATORIES AND DEPOSITIONS.

(Filed April 22, 1929.)

[Case No. 965]

It is hereby stipulated by and between Counsel for the respective parties, the Honorable Court consenting, that defendant's time for filing interrogatories now due to expire on April 24, 1929, may be and it hereby is extended thirty (30) days or to and including May 24, 1929.

It is further stipulated by and between counsel for the respective parties, the Honorable Court consenting, that the time for taking depositions of both parties under the provisions of Equity Rule 47 shall be extended to commence to run from and after May 24, 1929.

RICHEY & WATTS,

April 22, 1929. *Attorneys for Plaintiff.*

EDWIN P. CORBETT,

April 17, 1929. *Attorney for Defendant.*

MEMORANDUM OPINION OF COURT ON MOTION FOR PRELIMINARY INJUNCTION.

(Filed April 25, 1929.)

[Case No. 965]

HAHN, *J.:*

We have heard extended arguments of counsel urging that a temporary injunction be granted in this proceeding enjoining the defendant from using the patents involved in this litigation pending final hearing. We have read the briefs and the affidavits submitted. Our analysis of the situation would not be of any value to counsel who are thoroughly familiar with the case.

Our conclusion is that, while plaintiff has sustained its patents as against the defenses of an alleged impecunious infringer in a suit which was decided in its favor by Judge Paul Jones, the defendant here is in good faith pressing new defenses which, to say the least, seem to have merit enough to prevent the application of the rule permitting a temporary injunction to plaintiff merely because of the prior adjudication in its favor. Accordingly, we think that, having in mind the decisions of our Circuit Court of Appeals, particularly *Toledo Plate & Window Glass Co. v. Kawneer Mfg. Co.*, 262 Fed. 510, and cases therein cited, the proper course to pursue in this matter is to deny the motion for a temporary injunction, upon condition that the defendant file in this action an appropriate bond payable to the plaintiff, and covering damages which may accrue to the plaintiff from and after the 22nd day of April, 1929. If counsel cannot agree upon the amount of the bond, the court will hear further from counsel. If the defendant refuses to put up a bond, then the plaintiff may have a temporary injunction on giving the usual bond. If counsel cannot agree upon the amount of such bond, the matter may be further submitted to the court.

GEO. P. HAHN,
Judge.

April 25, 1929.

STIPULATION RE INTERROGATORIES AND DEPOSITIONS.

(Filed May 27, 1929.)

[Case No. 965]

It is hereby stipulated by and between Counsel for the respective parties, the Honorable Court consenting, that defendant's time for filing interrogatories now due to expire on May 24, 1929, may be and it hereby is extended thirty (30) days or to and including June 24, 1929.

It is further stipulated by and between counsel for the respective parties, the Honorable Court consenting, that the time for taking depositions of both parties under the provisions of Equity Rule 47 shall be extended to commence to run from and after June 24, 1929.

PHILIP E. SIGGERS,
May 23, 1929. *Attorney for Plaintiff.*
EDWIN P. CORBETT,
May 20th, 1929. *Attorney for Defendant.*

Time for filing interrogatories and for taking depositions is hereby extended in accordance with the foregoing Stipulation.

GEO. P. HAHN, *Judge.*

ORDER DENYING MOTION FOR PRELIMINARY INJUNCTION.

(Entered June 6, 1929, by Geo. P. Hahn, Judge.)

[Case No. 965]

The plaintiff's motion for preliminary injunction in the above-entitled cause having come on to be heard on the 22nd day of April, 1929, upon affidavits and exhibits filed by the plaintiff and the defendant, and having been argued by counsel for the respective parties, and the Court having fully considered the same, it is hereby,

ORDERED, that the said motion for a preliminary injunction be and the same hereby is denied; upon condition that the defendant give to the plaintiff a bond in the sum of Fifteen Thousand ($15,000.00) Dollars conditioned for the payment of all profits or damages that may be decreed against the defendant in this cause for the infringement of the patents sued on (between the date of this order and the final decree); and it is further Ordered that if the defendant refuses to put up a bond,

then the plaintiff may have a temporary injunction on giving the usual bond.

GEO. P. HAHN,

April 22, 1929. *United States District Judge.*

Approved as to form June 5, 1929.

GEO. E. KIRK, *For Plaintiff.*

BOND.

(Filed June 6, 1929.)

[Case No. 965]

THE UNITED STATES OF AMERICA,
NORTHERN DISTRICT OF OHIO,
WESTERN DIVISION, ss.

Know all men by these presents that The Osgood Company, as principal and the American Surety Company as surety, are held and firmly bound unto Keystone Driller Company in the sum of Fifteen Thousand ($15,000.00) Dollars to the payment of which they bind themselves and each of them, their successors and assigns firmly by these presents. Sealed with our seals and dated this 29th day of May, 1929.

The condition of the above bond is such, that whereas an order of the District Court of the United States for the Northern District of Ohio, Western Division, made and dated on the 22nd day of April, 1929, in a suit in equity therein pending in which suit said Keystone Driller Company is plaintiff and said The Osgood Company is defendant has denied a motion for preliminary injunction upon condition that the said defendant give to the said plaintiff a bond in the sum of Fifteen Thousand ($15,000.00) Dollars for the payment of all profits or damages that may be decreed against the said defendant in said cause by reason of the infringement of the patents sued on, between the date of said Order and the final decree herein, in said cause.

Now, if the said The Osgood Company shall pay to said Keystone Driller Company all profits or damages that are decreed against said The Osgood Company in this cause for the infringement of the patents described in the bill of complaint in said cause, between April 22, 1929, the date of said order, and the final decree in said cause, then these presents and this obligation shall be void; otherwise they shall remain in full force and effect.

THE OSGOOD COMPANY,
By M. C. MCNEIL, *V. P. & Secy.*
(Corporate Seal)
THE AMERICAN SURETY COMPANY,
By FRED J. KINSEY,
Resident Vice President.
(Seal)
Attest: J. M. SCHRADER,
Resident Asst. Secretary at Toledo, Ohio.

Approved:
GEO. P. HAHN, *United States District Judge.*

SUPPLEMENTAL BILL OF COMPLAINT.

(Filed Aug. 21, 1929.)

[Case No. 965]

To the Honorable, the Judges of the District Court of the United States for the Northern District of Ohio, Western Division:

Keystone Driller Company, a corporation of the State of Pennsylvania, having its principal place of business at Beaver Falls, Pennsylvania, presents the following Supplemental Bill of Complaint against The Osgood Company, a corporation organized and existing under the laws of the State of Ohio, and having a regular and established place of business at Marion, Marion County, Ohio, and thereupon Plaintiff complains and alleges:

(I) That on February 9, 1929, Keystone Driller Company, Plaintiff, exhibited its original Bill of Complaint to this Honorable Court against The Osgood Company in which Plaintiff stated that the Defendant was infringing, and threatening infringement, Letters Patent of the United States, Nos. 1,317,431, 1,511,114 and 1,543,250 and seeking relief from such infringement, and threatened infringement.

(II) That said Bill of Complaint recited the invention by LeRoy P. Clutter and Robert Rex Downie of certain new and useful improvements in excavating machines and of the filing of applications thereon for the United States patents, which subsequently issued therefrom, the infringement and threatening infringement thereof by The Osgood Company and other matters as set forth in said Bill of Complaint.

(III) That subsequent to the filing of said Bill of Complaint there was issued to the Plaintiff, Keystone Driller Company, United States Patents Nos. 1,709,466 and 1,716,432, infringement and threatened infringement by The Osgood Company of which is complained of in this Supplemental Bill of Complaint.

(IV) On and prior to January 3, 1927, Robert Rex Downie, a citizen of the United States, then residing at Beaver Falls, Pennsylvania, was the original, first and true inventor of new and useful improvement in Ditcher Scoop Assembly, not known or used by others in this country before his invention or discovery thereof, and not patented or described in any printed publication in this or any foreign country before his invention or discovery thereof or more than two years prior to his hereinafter mentioned application for patent therefor in the United States, and not in public use or on sale in the United States for more than two years prior to said application, and not by him abandoned to the public, and not first patented or caused to be patented by him or his legal representatives or assigns, in any foreign country upon an application filed more than twelve months prior to the filing of said application in the United States. So being the original, first and true inventor, as aforesaid, said Robert Rex Downie, on January 3, 1927, made application to the Commissioner of Patents of the United States for a patent for his said invention, in accordance with the then existing laws of the United States, and complied in all respects with the conditions and requirements of said laws.

(V) For good and valuable consideration, by an instrument in writing executed and recorded in the Patent Office before the grant of a patent on his said application of January 3, 1927, the said Robert Rex Downie assigned to plaintiff the whole right, title and interest in and to his said invention and authorized the Commissioner of Patents to issue the patent for said invention to the plaintiff.

(VI) Upon said application of Robert Rex Downie, and pursuant to his said assignment to plaintiff, due proceedings were had, in accordance with all requirements of law, such that on April 16, 1929, United States Patent No. 1,709,466, signed, sealed and executed in due form of law, was issued to plaintiff for said invention or improvements in Ditcher Scoop Assembly. And plaintiff brings here into court a copy of said patent No. 1,709,466 and prays that the same may be taken as part of this Bill of Complaint.

(VII) On and prior to May 22, 1926, Robert Rex Downie, a citizen of the United States, then residing at Beaver Falls, Pennsylvania, was the original, first and true inventor of certain new and useful improvements in Excavating Scoop, not known or used by others in this country before his invention or discovery thereof, not patented or described in any printed publication in this or any foreign country before his invention or discovery thereof or more than two years prior to his hereinafter mentioned application for patent therefor in the United States, and not in public use or on sale in the United States for more than two years prior to said application, and not by him abandoned to the public, and not first patented or caused to be patented by him or his legal representatives or assigns in any foreign country upon an application filed more than twelve months prior to the filing of said application in the United States. So being the original, first and true inventor, as aforesaid, said Robert Rex Downie, on May 22, 1926, made application to the Commissioner of Patents of the United States for a patent on his said invention, in accordance with the then existing laws of the United States, and complied in all respects with said laws.

(VIII) For good and valuable consideration by an instrument in writing executed and recorded in the Patent Office before the grant of a patent on his said application of May 22, 1926, the said Robert Rex Downie

assigned to plaintiff the whole right, title and interest in and to his said invention set forth in the application last mentioned, and authorized the Commissioner of Patents to issue the patent therefor to the plaintiff.

(IX) Upon said Robert Rex Downie's said application of May 22, 1926, and pursuant to his assignment to plaintiff of the invention described therein, due proceedings were had, in accordance with all requirements of law, such that on June 11, 1929, United States Patent No. 1,716,432, signed, sealed and executed in due form of law, was issued to plaintiff for said invention or improvements in Excavating Scoop. And plaintiff brings here into court a copy of said patent No. 1,716,432 and prays that the same may be taken as part of this bill of complaint.

(X) By reason of the premises, prior to the filing of this bill of complaint, and prior to the acts of infringement hereinafter complained of, plaintiff became and has ever since remained and now is the sole owner of said patents Nos. 1,709,466 and 1,716,432 and of all rights thereunder.

(XI) Under the protection of the aforesaid patents, plaintiff is engaged in the manufacture and sale of Excavating Machines embodying said inventions. Said inventions of said patents and each of them are of great utility and value, and have come extensively into public use, with substantial benefits to the public and to the plaintiff. The plaintiff has been to large effort and expense in and about said inventions for the purpose of introducing them into use and supplying embodiments thereof. Its business in this connection is now threatened with irreparable injury by the acts of defendant hereinafter complained of.

(XII) Since the respective dates of issue of said patents Nos. 1,709,466 and 1,716,432 and since the plaintiff acquired its title to and rights under said patents as hereinbefore recited, and within six years next preceding the filing of this bill of complaint, and without leave of or license from plaintiff, and in defiance of said patents and each of them and of plaintiff's rights thereunder, the said The Osgood Company has made and/or caused to be made and has used and has sold, and is now making, using and selling, within said Northern District of Ohio, Western Division, and elsewhere within the United States of America, numerous excavating machines em-

bodying the inventions described and claimed in and patented by said patents Nos. 1,709,466 and 1,716,432 and each of them, in infringement of said patents and each of them, and defendant threatens to continue to infringe each of said patents.

(XIII) Defendant has derived and continues to derive unlawful gains and profits from said infringement, and plaintiff has suffered and is threatened with irreparable damage by reason of said infringement. Defendant threatens to continue all of said acts above complained of. Defendant by its acts aforesaid has impaired plaintiff's enjoyment of its exclusive rights and privileges granted upon issue of said letters patent, and each of them, and has unjustly deprived plaintiff of large profits which it would have realized and enjoyed from said inventions except for defendant's infringement.

(XIV) The inventions of the aforesaid patents are susceptible of conjoint embodiment and use in one and the same construction, both with each other and with the invention of the patents set forth in the original bill of complaint, and have been so conjointly embodied and used in the machines made and sold by defendant as aforesaid.

(XV) Plaintiff has also specially notified defendant of each of said patents and of plaintiff's ownership thereof and of the infringements complained of, but said defendant has continued and will unless restrained continue its acts complained of notwithstanding and in spite of said notice.

WHEREFORE plaintiff prays:

(a) That the defendant, The Osgood Company, be directed to appear and answer this Bill of Complaint (but not under oath, answer under oath being expressly waived), and to abide by and perform such orders and decrees as the court may deem proper.

(b) That the defendant, The Osgood Company, and its officers, agents, servants, employees, and all persons in privity with them and each of them, be enjoined and restrained *pendente lite*, by decree and injunction of this court, from directly or contributorily infringing plaintiff's said patents Nos. 1,709,466 and 1,716,432, and each of them and from threatening to infringe the same.

(c) That the defendant, The Osgood Company, and its officers, agents, servants, employees, and all persons in privity with them, and each of them, be enjoined and restrained perpetually, by decree and injunction of this court, from directly or contributorily infringing plaintiff's said patents Nos. 1,709,466 and 1,716,432 and each of them and from threatening to infringe the same.

(d) That the defendant, The Osgood Company, be required to account to plaintiff for the profits realized by defendant and the damages to plaintiff in the premises; and that this cause be referred to a Master to take an accounting of said profits and damages; and that such damages be increased to three times the amount thereof or as to the Court may seem meet in view of all the circumstances.

(e) That said defendant be decreed to pay the costs and disbursements of this suit to be taxed.

(f) And that plaintiff have such other and further relief as to the court may seem meet.

KEYSTONE DRILLER COMPANY,
ROBERT REX DOWNIE,
Secretary.

GEO. E. KIRK, *Solicitor,*
RICHEY & WATTS, *Solicitors,*
P. C. SIGGERS, *Of Counsel.*

Verification.

STATE OF PENNSYLVANIA,
COUNTY OF BEAVER, ss.

Robert Rex Downie, being duly sworn, deposes and says that he is Secretary of the corporation, Keystone Driller Company, the plaintiff named in the foregoing Bill of Complaint; that he has read this Bill; that insofar as the statements contained in this Bill are within his knowledge they are true, and so far as they are derived from information and belief, he verily believes them to be true.

ROBERT REX DOWNIE.

Subscribed and sworn to before me this 5th day of August, 1929.

CHAS. THEO. SMITH,
(Notarial Seal) *Notary Public.*
Commission expires March 13, 1931.

Service of copy of Supplemental Bill of Complaint acknowledged for purpose of Petition for Leave to File, Noticed for Saturday, August 24, 1929, at 10:00 A. M.

ALFRED C. HIRTH,
Of Counsel for Defendant.

Aug. 21, 1929.

PRINTER'S NOTE:

Copies of U. S. Patents Nos. 1,709,466 and 1,716,432 to Robert Rex Downie were attached to the original of this Supplemental Bill of Complaint, but same have been omitted at this point as they are listed as a part of Defendant's Exhibit No. 62, Book of Patents.

ORDER PERMITTING FILING OF SUPPLEMENTAL BILL OF COMPLAINT.

(Entered August 23, 1929, by S. H. West, Judge.)

[Case No. 965]

It is hereby ordered that the Plaintiff be permitted to file its Supplemental Bill of Complaint with respect to United States Letters Patents to Downie, Nos. 1,709,466 and 1,716,432.

S. H. WEST,
United States District Judge.

Signed by Judge West at Cleveland, 8/22/29. FOR.

Plaintiff assents to the entry of the above Order.

RICHEY & WATTS,
Counsel for Plaintiff.

Defendant assents to the filing of the Supplemental Bill of Complaint, reserving its right to except as to its form or substance.

EDWIN P. CORBETT,
Counsel for Defendant.

MOTION FOR EXTENSION OF DEFENDANT'S TIME FOR FILING ANSWER TO SUPPLEMENTAL BILL OF COMPLAINT AND ORDER GRANTING EXTENSION.

(Filed Sept. 7, 1929.)

[Case No. 965]

Now comes the defendant, by its attorneys and moves the Court for an order extending its time for filing answer to plaintiff's Supplemental Bill of Complaint herein, from September 11, 1929, to and including October 1, 1929, and respectfully shows:

1. That an order was signed by the Court on August 22, 1929, permitting plaintiff to file a Supplemental Bill of Complaint herein alleging infringement of United States Letter Patent No. 1,709,466, dated April 16, 1929, United States Letter Patent No. 1,716,432, dated June 11, 1929.

2. That plaintiff's attorneys have notified defendant's attorneys, Sept. 3, 1929, that plaintiff will rely at the trial on some twenty-four (24) claims of these additional patents added to this suit by the Supplemental Bill of Complaint.

3. That defendant's attorneys will be unable to file its answer to said Supplemental Bill of Complaint within the time now set, due to the fact that it has not had sufficient time to complete its searches in the patented art to which these patents relate, although defendant's attorneys started these searches before the Supplemental Bill of Complaint was actually filed herein.

4. That defendant's attorneys have to date received no report from said searches so instituted, and that if a report were received within the remaining time left for filing its answer to said Supplemental Bill of Complaint, such time remaining would not be sufficient to enable defendant's attorneys to study and select the references in time to permit defendant's attorneys to file his answer to said Supplemental Bill of Complaint within his time.

Wherefore, defendant prays that its time for filing answer to said Supplemental Bill of Complaint be extended to and including October 1, 1929.

Respectfully submitted,

EDWIN P. CORBETT,
Attorney for Defendant.

ORDER: It is so ordered.

GEO. P. HAHN,
U. S. District Judge.

Dated on September 9th, 1929.

ORDER PERMITTING THE GENERAL EXCAVATOR COMPANY AND THE OSGOOD COMPANY TO TAKE DEPOSITIONS JOINTLY.

(Entered Sept. 9, 1929, by Geo. P. Hahn, Judge.)

[Case No. 965]

It is hereby ordered:

1. That the General Excavator Company, and The Osgood Company, defendants in Equity Cases 964 and 965, respectively, now pending in this Court, may take jointly any and all depositions allowed by statute or the United States Equity Rules, such depositions so taken to be entitled in both of said cases, and a separate copy of any and all depositions so taken, with exhibits, to be filed in each case, provided that when the original ink copy of any said depositions and original Exhibits are filed in one case a carbon copy of said depositions and copies of said original Exhibit may be filed in the other case subject to comparison with the original deposition and original exhibits and subject to correction if any error or discrepancy be found.

2. That any and all depositions so taken may be read on the trial of either or both of said cases the same as if the said depositions had been taken by the defendants separately, subject to all exceptions for relevancy.

3. That the said defendants shall serve separate notices of taking testimony upon the Keystone Driller Company or its attorneys and that a separate certificate shall be filed with each deposition in each case by the officer before whom such deposition is taken.

4. That at the taking of said depositions the witnesses may be examined by the attorney for either defendant on behalf of the other defendant, or the attorney for each defendant may examine the witnesses separately as they so desire.

5. That a copy of this order be filed in each of said cases.

GEO. P. HAHN, *District Judge.*

STIPULATION RE DEPOSITIONS.

(Filed Sept. 28, 1929.)

[Case No. 965]

It is hereby stipulated by and between Counsel for the respective parties, the Honorable Court consenting, that defendant's time for taking original depositions under the provisions of Equity Rule 47 shall be, and hereby is, extended to and including October 26, 1929, and both parties' times for taking rebutting depositions is extended accordingly.

RICHEY & WATTS,

September 26, 1929. *Attorneys for Plaintiff.*

EDWIN P. CORBETT,

September 25, 1929. *Attorney for Defendant.*

OK: GEO. P. HAHN.

ANSWER TO SUPPLEMENTAL BILL OF COMPLAINT.

(Filed Oct. 1, 1929.)

[Case No. 965]

Answer of The Osgood Company to the Supplemental Bill of Complaint of the Keystone Driller Company in the above-entitled cause:

I.

Defendant admits that, on February 9, 1929, Keystone Driller Company, Plaintiff, filed its original Bill of Complaint against The Osgood Company, but Defendant denies that it ever infringed or threatened to infringe Letters Patent of the United States, Nos. 1,317,431, 1,511,114 and 1,543,250, or that the Plaintiff is entitled to any relief for any such alleged infringement, or any such alleged threatened infringement.

II.

Defendant admits that Plaintiff's original Bill of Complaint recited alleged inventions by LeRoy P. Clutter and Robert Rex Downie of certain alleged new and useful improvements in Excavating Machines and of the filing of applications thereof for United States Letters Patents, but Defendant denies that The Osgood Company ever infringed or threatened to infringe any of the said patents recited in said original Bill of Complaint, as will more fully appear from Defendant's Answer to said original Bill of Complaint.

III.

Defendant admits that, subsequent to the filing of said original Bill of Complaint, there was issued to the Plaintiff, Keystone Driller Company, United States Letters Patents Nos. 1,709,466 and 1,716,432, but Defendant denies that it has ever infringed, or threatened to infringe, said Letters Patents upon which is based this Supplemental Bill of Complaint.

IV.

Defendant admits that, on January 3, 1927, Robert Rex Downie filed in the United States Patent Office an application for Letters Patent, upon Ditcher-Scoop Assembly, but Defendant denies all of the other allegations of Paragraph IV of said Supplemental Bill of Complaint.

V.

Defendant has no knowledge, save by the Supplemental Bill of Complaint, of the allegations contained in Paragraph V, and, therefore, denies the same, and leaves the Plaintiff to its proof.

VI.

Defendant admits that on April 16, 1929, United States Letters Patent, No. 1,709,466, was issued to Plaintiff as alleged Assignee of Robert Rex Downie, upon said application for Ditcher-Scoop Assembly, but Defendant denies all of the other allegations of Paragraph VI of the Supplemental Bill of Complaint.

VII.

Defendant denies that the alleged invention and alleged improvement described and claimed in said Letters Patent, No. 1,709,466, contains and embodies any ma-

terial beneficial advances over what has previously been known to those skilled in the art, but, on the contrary, avers the fact to be that the claims of said Letters Patent and each of them are invalid and void on the following grounds:

(a) Because the said Robert Rex Downie was not the original and first inventor or discoverer of the invention alleged to be described and claimed in the said Letters Patent, or of any material or substantial part thereof, but that the same, and all material or substantial parts thereof, had been patented or described in patents filed prior to the date of the alleged invention of the said Robert Rex Downie; and that said patent is void and invalid because the alleged invention has been patented or described in printed publications prior to said Downie's supposed invention or discovery thereof, or more than two years prior to his application therefor, as follows:

UNITED STATES PATENTS

Patentee	*Number*	*Issued*
R. R. Osgood,	254,563,	March 7, 1882
G. W. King,	589,565,	Sept. 7, 1897
A. W. Robinson,	650,991,	June 5, 1900
O. Hetlesaeter,	665,682,	June 8, 1901
P. Howard,	647,417,	May 21, 1901
R. R. Osgood,	708,658,	Sept. 9, 1902
W. Ferris,	809,436,	Jan. 9, 1906
J. H. W. Libbe,	822,529,	June 5, 1906
A. L. Becker,	857,577,	June 25, 1907
O. Hetlesaeter,	875,432,	Dec. 31, 1907
J. G. Fairbanks,	892,508,	July 7, 1908
A. W. Robinson,	1,047,991,	Dec. 24, 1912
E. S. Black,	1,107,252,	Aug. 18, 1914
T. F. Moore,	1,378,970,	May 24, 1921
W. D. Williams,	1,479,849,	Jan. 8, 1924
R. R. Downie,	1,511,114,	Oct. 7, 1924
R. R. Downie,	1,518,314,	Dec. 9, 1924
W. M. Bager, et al.,	1,599,630,	Sept. 14, 1926
E. H. Lichtenberg,	1,609,372,	Dec. 7, 1926
A. F. Jelen,	1,611,195,	Dec. 21, 1926

Also, in many other Letters Patent and printed publications not known to the Defendant but, which when discovered hereafter, Defendant prays leave of the Court to furnish and concerning which Defendant prays leave

to incorporate data in this, its Answer, to supplemental Bill of Complaint, by suitable amendment thereof.

(b) Because, in view of the state of the art in respect to the device disclosed and claimed in said Letters Patent, prior to, or at the time of, the alleged invention of the said Robert Rex Downie, as described and claimed in Letters Patent, No. 1,709,466, the supposed improvement described and claimed in said Letters Patent was not a patentable invention, discovery or improvement, but comprised mere selections and adaptations from prior known structures requiring no invention, but being within the domain of mere judgment and mechanical skill.

VIII.

Defendant avers that the alleged invention and improvement described and claimed in said Letters Patent, No. 1,709,466, and all material and substantial parts thereof were publicly known to and used by the following persons at the places indicated prior to any invention thereof by the said Robert Rex Downie, and more than two years prior to the filing of an application for said Letters Patent:

The Osgood Company, of Marion, Ohio, at Marion, Ohio, and elsewhere in the United States;

The Mahoney Railroad Ditching Machine Co., of Vincennes, Indiana, at Vincennes, Indiana, and elsewhere in the United States.

And to and by others whose names and residences, and the place of use or knowledge by them Defendant begs leave to set up herein by amendment or otherwise when it has more fully ascertained the same.

IX.

Defendant admits that, on May 22, 1926, Robert Rex Downie made application for United States Letters Patent on alleged Improvement in Excavating Scoop, but Defendant denies all of the other allegations of Paragraph VII of the Supplemental Bill of Complaint.

X.

Defendant has no knowledge, save by the Supplemental Bill of Complaint, of the allegations contained in Paragraph VIII, and, therefore, denies the same, and leaves the Plaintiff to its proof.

XI.

Defendant admits that, on June 11, 1929, United States Letters Patent, No. 1,716,432, was issued to the Keystone Driller Company upon said Downie application for alleged improvements in Excavating Scoop, as alleged Assignee of said Robert Rex Downie, but Defendant denies all of the other allegations of Paragraph IX of the said Supplemental Bill of Complaint.

XII.

Defendant denies that the alleged invention and improvement described and claimed in said Letters Patent, No. 1,716,432, contains and embodies any material beneficial advance over what has previously been known to those skilled in the art, but, on the contrary, avers the fact to be that the claims of said Letters Patent and each of them are invalid and void on the following grounds:

(a) Because the said Robert Rex Downie was not the original and first inventor or discoverer of the invention alleged to be described and claimed in the said Letters Patent, or of any material or substantial part thereof, but that the same, and all material or substantial parts thereof, had been patented or described in patents filed prior to the date of the alleged invention of the said Robert Rex Downie; and that said patent is invalid and void because the alleged invention has been patented or described in printed publications prior to the said Downie's supposed invention or discovery thereof, or more than two years prior to his application for a patent therefor, as follows:

UNITED STATES PATENTS

Patentee	*No.*	*Issued*
W. Davey,	Re. 11,516,	Dec. 3, 1895
H. G. Butler,	493,421,	March 14, 1893
E. J. Davy,	508,685,	Nov. 14, 1893
W. Davy,	514,645,	Feb. 13, 1894
H. G. Butler,	519,835,	May 15, 1894
V. W. Mason, Jr.,	711,992,	Oct. 28, 1902
F. M. Bisbee,	741,099,	Oct. 13, 1903
W. S. Livengood,	872,439,	Dec. 3, 1907
W. H. Gade,	1,014,293,	Jan. 9, 1912
J. E. Potter,	1,147,432,	July 20, 1915
A. Hemme,	1,233,574,	July 17, 1917

T. F. Moore,	1,245,118,	Oct.	30, 1917
W. L. Edmondson,	1,340,385,	May	18, 1920
H. C. McGrew,	1,446,389,	Feb.	20, 1923
R. R. Downie,	1,511,114,	Oct.	7, 1924
R. R. Downie,	1,518,314,	Dec.	9, 1924
H. J. Bentson,	1,560,136,	Nov.	3, 1925
C. Harrison,	1,580,725,	Apr.	13, 1926
G. T. Rosselle,	1,648,783,	Nov.	8, 1927

and, also, in many other Letters Patent and printed publications not known to the Defendant but, which when discovered hereafter, Defendant prays leave of the Court to furnish and concerning which Defendant prays leave to incorporate data in this, its Answer, to the Supplemental Bill of Complaint, by suitable amendment thereof.

(b) Because, in view of the state of the art in respect to the device disclosed and claimed in said Letters Patent, prior to, and at the time of, the alleged invention of the said Robert Rex Downie, as described and claimed in Letters Patent No. 1,716,432, the supposed improvement described and claimed in said Letters Patent was not a patentable invention, discovery or improvement, but comprised mere selections and adaptations from prior known structures requiring no invention but being within the domain of mere judgment and mechanical skill.

XIII.

Defendant avers that the alleged invention and improvement described and claimed in said Letters Patent, No. 1,716,432, and all material and substantial parts thereof were publicly known and used by the following persons at the places indicated prior to any invention thereof by the said Robert Rex Downie, and more than two years prior to the filing of an application for said Letters Patent:

And to and by others whose names and residences and the place of use or knowledge by them Defendant begs leave to set up herein by amendment or otherwise when it has more fully ascertained the same.

XIV.

Defendant has no knowledge save by the Supplemental Bill of Complaint of the allegations contained in Paragraph X, and, therefore, denies the same and leaves the Plaintiff to its proof.

XV.

Defendant admits that the Plaintiff is engaged in the manufacture and sale of Excavating Machines, but Defendant is without knowledge as to whether or not said Excavating Machines embody the alleged inventions covered by the aforesaid patents in suit or any part thereof, or whether or not the alleged inventions of the patents in the Supplemental Bill of Complaint or each of them are of great utility or value, or whether or not they have come extensively into public use, or whether or not said alleged inventions are of substantial benefit to the public or to the Plaintiff, or whether or not the Plaintiff has been put to large effort and expense in and about said alleged inventions for the purpose of introducing them into use or supplying embodiments thereof and, therefore, denies the same and leaves the Plaintiff to its proof. Defendant denies that the business of the Plaintiff in this connection is now threatened with irreparable injury or any injury whatsoever by reason of any act or acts of Defendant.

XVI.

Defendant denies that, since the respective dates of issue of said patents Nos. 1,709,466 and 1,716,432, or since the Plaintiff acquired its alleged title and right under said patents, or within six years next preceding the filing of this Supplemental Bill of Complaint or at any other time, it has ever without leave or license from the Plaintiff, or in defiance of said patents or each of them, or of any alleged rights of Plaintiff thereunder, has made and/or caused to be made, or has used or has sold, or is now making, using or selling within the said Northern District of Ohio, Western Division, or elsewhere within the United States, any excavating machines embodying the alleged inventions described and claimed in said Letters Patent, Nos. 1,709,466 or 1,716,432, or any of them, or that it has ever infringed either of said patents or any of them, or that it has ever threatened to infringe either of said patents or any of the claims thereof, or that it has any intention of so doing, or that Defendant threatens to infringe any of said patents in the future.

XVII.

Defendant denies that it has ever derived, or that it will continue to derive any unlawful gains or profits, or any gains or profits whatsoever from any alleged infringements of the patents sued on in the Supplemental

Bill of Complaint, or that the Plaintiff has suffered or is threatened with irreparable damage by reason of any act or acts of Defendant, or that Defendant has infringed any of said patents mentioned in the Supplemental Bill of Complaint, or that it is continuing or that it threatens to continue any act or acts which would constitute infringement, or that Defendant has by any act or acts impaired Plaintiff's enjoyment of any of its alleged exclusive rights or privileges under said Letters Patent, or any of them, or that it has unjustly or otherwise deprived Plaintiff of large profits or any profits whatsoever which Plaintiff alleges it would have realized and enjoyed from said alleged inventions, except for such alleged infringement.

XVIII.

Defendant denies that the aforesaid patents are susceptible of conjoint embodiment or use in one and the same construction, or that they have been so conjointly embodied or used in machines made or sold by Defendant.

XIX.

Defendant admits having received notice from Plaintiff alleging infringement of United States Letters Patent, No. 1,709,466, but Defendant avers such notice was not received on this patent until several days after June 4, 1929, and Defendant is unable to locate any alleged legal notice having been received by it and, therefore, denies notice of alleged infringement of patent No. 1,716,432, prior to the filing of this Supplemental Bill of Complaint, and Defendant denies that it has continued or will, unless restrained, continue to do, any act or acts which would constitute infringement of the said patents upon which this Supplemental Bill of Complaint is based.

XX.

Defendant is informed and believes that, while applications for said Letters Patent Nos. 1,709,466, and 1,716,432, were pending in the Patent Office of the United States, the applicants of the said patents so limited and confined the claims of said applications under the requirements of the Commissioner of Patents, that neither said applicants nor their assigns can now seek for or obtain a construction for such claims sufficiently broad to cover the construction used by this Defendant.

XXI.

Defendant denies that the Plaintiff has any right to a perpetual injunction or to a preliminary injunction upon this suit, and denies that it has in any way trespassed upon any rights of Plaintiff whatsoever, or that it has directly or contributorily infringed Plaintiff's patents Nos. 1,709,466 and 1,716,432, or that it has ever threatened to infringe either of said patents, or that the Plaintiff is entitled to costs or an account of profits or damages or any damages whatsoever, or to any other or further relief whatsoever.

WHEREFORE, the Defendant prays that the Supplemental Bill of Complaint herein be dismissed, at the cost of the Plaintiff.

LLOYD I. WILLIAMS,
Solicitor for Defendant.

EDWIN P. CORBETT,
Of Counsel.

PLAINTIFF'S INTERROGATORIES.

(Filed Oct. 21, 1929.)

[Case No. 965]

Now comes the plaintiff, the Keystone Driller Company, by its attorneys, and within twenty-one (21) days after the filing of defendant's answer to the supplemental bill of complaint, and applies to the Court for an order allowing plaintiff to file interrogatories and directing Mr. M. C. McNeil, vice president and secretary, or other officers or employee of defendant company having knowledge of the matters inquired about, to answer the following interrogatories under oath:

(1) Did defendant make, use and/or sell the particular machine pictured in photographs, plaintiff's ex-

hibits 1 to 13 inclusive, attached hereto between June 11, 1929, the date of issue of Letters Patent No. 1,716,432 here in suit and August 23, 1929, the date of filing of the supplemental bill of complaint. For defendant's information in answering this and subsequent interrogatories plaintiff states that the machine shown in the photographs just mentioned bore the following markings: No. 2199, The Osgood Company, Marion, Ohio, Joseph L. Cuozzo, General Contractor, 27 Tuckahoe Rd., Tel.—Yonkers 1214, when the photographs were made at Yonkers, New York, in July 1929.

(2) If the answer to interrogatory No. 1 is in the negative then did defendant make, use and/or sell, between June 11, 1929 and August 23, 1929 any excavating scoops having teeth secured to the sides thereof like the scoop shown by Nos. 1-2-5-6-11-12 and/or -13 of the attached photographs, plaintiff's exhibits 1 to 13 inclusive.

(3) If the answers to interrogatories 1 and/or 2 are in the negative will defendant furnish plaintiff at the time of filing answers to these interrogatories with drawings of all the excavating scoops having teeth secured to the sides thereof which defendant has made, used and/or sold between June 11, 1929 and August 23, 1929.

(4) Did defendant make, use and/or sell the particular machine pictured in the photographs, plaintiff's exhibits 1 to 13 inclusive, attached hereto, between April 16, 1929, the date of issue of Letters Patent No. 1,709,466, here in suit, and August 23, 1929, the date of filing of the supplemental bill of complaint.

(5) If the answer in interrogatory No. 4 is in the negative then did defendant make, use and/or sell between April 16, 1929 and August 23, 1929, any ditcher stick and/or excavating scoop like those shown by Nos. 1-2-5-6-7-8-9 and/or 10 of the attached photographs, plaintiff's exhibits 1 to 13 inclusive.

(6) If the answers to interrogatories 4 and/or 5 are in the negative, will defendant furnish plaintiff, at the time answers to these interrogatories are filed, with drawings of all the ditcher sticks and excavating scoops adapted to be removably assembled together which defendant has made, used and/or sold between April 16, 1929 and August 23, 1929.

The foregoing interrogatories are intended to elicit facts material to plaintiff's case and are in accordance

with the provisions of Equity Rule No. 58 and the established practice in the Courts of this District and Circuit.

RICHEY & WATTS,
Attorneys for Plaintiff.

It is hereby ordered that the foregoing interrogatories be filed and that Mr. M. C. McNeil or other officer or employee of the defendant company having knowledge of the facts inquired about make answer to the interrogatories under oath.

GEO. P. HAHN,
U. S. District Judge.

STIPULATION RE DEPOSITIONS.

(Filed Oct. 22, 1929.)

[Case No. 965]

It is hereby stipulated by and between Counsel for the respective parties, the Honorable Court consenting, that defendant's time for filing interrogatories under the Supplemental Bill of Complaint and answer thereto herein now due to expire on October 21, 1929, may be and it hereby is extended thirty (30) days or to and including November 21, 1929.

It is further stipulated by and between counsel for the respective parties, the Honorable Court consenting, that the time for taking depositions of both parties under said Supplemental Bill of Complaint in accordance with the provisions of Equity Rule 47 shall be extended to commence to run from and after November 21, 1929.

RICHEY & WATTS,
October 18, 1929. *Attorneys for Plaintiff.*

EDWIN P. CORBETT,
October 18, 1929. *Attorney for Defendant.*

Approved: GEO. P. HAHN, *D. J.*

STIPULATION RE DEPOSITIONS.

(Filed Oct. 26, 1929.)

[Case No. 965]

It is hereby stipulated by and between Counsel for the respective parties, the Honorable Court consenting, that defendant's time for taking original depositions under the provisions of Equity Rule 47 shall be, and hereby is, extended to and including November 26, 1929, and both parties' times for taking rebutting depositions is extended accordingly.

RICHEY & WATTS,
October 23, 1929. *Attorneys for Plaintiff.*

EDWIN P. CORBETT,
October 22, 1929. *Attorney for Defendant.*

Approved: GEO. P. HAHN, *U. S. District Judge.*

OBJECTIONS TO PLAINTIFF'S INTERROGATORIES.

(Filed Oct. 31, 1929.)

[Case No. 965]

Now comes defendant by its attorney and objects to the interrogatories filed by plaintiff October 21, 1929 under its supplemental bill of complaint, on the following grounds:

1. Each and all of plaintiff's said interrogatories are objected to because of the fact that plaintiff's Supplemental Bill of Complaint prays for "trebled damages." Increased damages are in the nature of a penalty and it is settled law that a Court of Equity will not compel discovery by a party if such discovery may subject such party to a penalty.

The defendant, therefore, respectfully requests the Court that an order be entered to the effect that the defendant need not answer any of the interrogatories propounded by plaintiff herein unless and until all claims for any such increased damages be abandoned by plaintiff and withdrawn from its Supplemental Bill of Complaint.

2. Interrogatories 1 and 4 are objected to on the ground that whereas they require defendant to state

whether or not it made, used or sold a particular machine which is alleged to be shown in photographs 1 to 13 inclusive, none of the said photographic exhibits referred to shows an entire machine but merely indistinct and fragmentary parts of machines of such an incomplete nature that defendant could not safely, correctly or conscientiously answer said interrogatories based on such incomplete, indistinct and fragmentary reference matters as Exhibits 1-13 appear to be.

3. Interrogatories 2 and 5 are objected to on the ground that they require answers by defendant which necessarily would have to be conclusions and surmises based upon inspection of small photographic exhibits referred to in said interrogatories which said exhibits are of such an incomplete, fragmentary and indistinct a nature that defendant could not correctly nor safely make answer; or determine from said photographs whether the parts referred to in said interrogatories were in fact like any made, used or sold by defendant or not.

4. Interrogatories 3 and 6 are objected to on the ground that whereas the patents sued upon in said supplemental bill of complaint are confined to specific structures, the said interrogatories call for production by defendant of drawings of all excavating scoops having teeth secured to the sides thereof, and drawings of all ditcher sticks and excavating scoops adapted to be removably assembled together made, used or sold by defendant, whether coming within the claim of said patents sued or not.

5. Interrogatories 3 and 6 are objected to on the ground that they are too broad and are in the nature of a mere "fishing expedition," and therefore not in support of the case or relief which plaintiff claims itself entitled to in its supplemental bill of complaint.

Respectfully submitted,

EDWIN P. CORBETT,
Attorney for Defendant.

LLOYD I. WILLIAMS,
Solicitor for Defendant.

Service of a copy of the foregoing Objections to Plaintiff's Interrogatories is hereby acknowledged this 31st day of ....., 1929.

GEO. E. KIRK,
Solicitor for Plaintiff.

STIPULATION RE DEPOSITIONS.

(Filed Nov. 30, 1929.)

[Case No. 965]

It is hereby stipulated by and between Counsel for the respective parties, the Honorable Court consenting, that defendant's time for taking original depositions under the provisions of Equity Rule 47 shall be, and hereby is, extended to and including December 26, 1929, and both parties' times for taking rebutting depositions is extended accordingly.

RICHEY & WATTS,

November 26, 1929. *Attorneys for Plaintiff.*

EDWIN P. CORBETT,

November 26, 1929. *Attorney for Defendant.*

Approved: GEO. P. HAHN, *Judge.*

STIPULATION RE DEPOSITIONS.

(Filed Dec. 24, 1929.)

[Case No. 965]

It is hereby stipulated by and between Counsel for the respective parties, the Honorable Court consenting, that defendant's time for taking original depositions under the provisions of Equity Rule 47 shall be, and hereby is, extended to and including January 26, 1930, and both parties' time for taking rebutting depositions is extended accordingly.

RICHEY & WATTS,

December 18, 1929. *Attorneys for Plaintiff.*

EDWIN P. CORBETT,

December 18, 1929. *Attorney for Defendant.*

If is so ordered.

GEO. P. HAHN, *Judge.*

STIPULATION RE DEPOSITIONS.

(Filed Feb. 4, 1930.)

[Case No. 965]

It is hereby stipulated by and between Counsel for the respective parties, the Honorable Court consenting, that defendant's time for taking original depositions under the provisions of Equity Rule 47 shall be, and hereby is, extended to and including February 26, 1930, and both parties' time for taking rebutting depositions is extended accordingly.

RICHEY & WATTS,

January 31, 1930. *Attorneys for Plaintiff.*

EDWIN P. CORBETT,

January 26, 1930. *Attorney for Defendant.*

It is so ordered.

JOHN M. KILLITS, *Judge.*

MOTION FOR EXTENSION OF TIME FOR TAKING DEPOSITIONS AND ORDER GRANTING MOTION.

(Filed Feb. 21, 1930.)

[Case No. 965]

Now comes the Defendant, by its Attorney, and moves that its time for taking original depositions under the provisions of Equity Rule 47, in the above-entitled case, now due to expire on February 26, 1930, be extended for a period of thirty (30) days, or to and including March 26, 1930.

EDWIN P. CORBETT,

February 20, 1930. *Attorney for Defendant.*

It is so ordered.

GEO. P. HAHN, *Judge.*

STIPULATION RE DEPOSITIONS.

(Filed Feb. 27, 1930.)

[Case No. 965]

It is hereby stipulated by and between Counsel for the respective parties, the Honorable Court consenting, that Defendant's time for taking Depositions under the Supplemental Bill of Complaint in the above-entitled case in accordance with the provisions of Equity Rule 47, shall be, and hereby is, extended to and including March 21, 1930, and the time of both parties for taking rebuttal depositions is extended accordingly.

RICHEY & WATTS,

Feb. . ., 1930. *Attorneys for Plaintiff.*

EDWIN P. CORBETT,

Feb. 20, 1930. *Attorney for Defendant.*

It is so ordered.

GEO. P. HAHN,

February 27, 1930. *Judge.*

MOTION TO EXTEND TIME TO TAKE DEPOSITIONS AND ORDER GRANTING EXTENSION AND AFFIDAVIT OF EDWIN P. CORBETT, IN SUPPORT.

(Filed March 17, 1930.)

[Case No. 965]

Now comes the Defendant, by its Attorney, and moves that its time for taking original depositions under the provisions of Equity Rule 47, in the above-entitled case, now due to expire on March 26, 1930, be extended for a period of thirty (30) days, or to and including April 26, 1930.

EDWIN P. CORBETT,

March 17, 1930. *Attorney for Defendant.*

Extension granted to April 26, 1930.

GEO. P. HAHN,

March 17, 1930. *Judge.*

AFFIDAVIT OF EDWIN P. CORBETT.

(Filed March 17, 1930.)

[Case No. 965]

STATE OF OHIO,
COUNTY OF FRANKLIN, SS.

EDWIN P. CORBETT, being first duly sworn, deposes and says that he is Attorney for Defendant in the above-entitled case; that Defendant's time for taking depositions under the provisions of Equity Rule 47 is due to expire March 26, 1930; that Defendant has been very diligent, having taken to date some twenty-three depositions of witnesses living in various parts of the United States; that it has already sent out a Notice for taking the depositions of some five witnesses beginning March 19, 1930, at Joplin, Missouri; that a notice for taking testimony has likewise been mailed for the taking of a deposition at Leadville, Colorado, on March 24, 1930; that the time now left will be insufficient for taking the depositions of the witnesses whose testimony Defendant will require to support the defenses set out in its answer to the original Bill of Complaint, and may even be insufficient for the taking of the testimony of the witnesses for whom the notices have now been mailed at Joplin, Missouri, and Leadville, Colorado; that the extension requested is for Defendant's time for taking depositions under the original Bill of Complaint and not for its time for taking depositions under the Supplemental Bill of Complaint; that Plaintiff has refused to grant any further extension to Defendant for taking depositions under the original Bill of Complaint, therefore, making it necessary for Defendant to apply to the Court for this extension; that Defendant will need this additional time to complete its defenses to the allegation of the original Bill of Complaint.

EDWIN P. CORBETT.

Sworn to and subscribed before me, a Notary Public in and for the County aforesaid, this 15th day of March, 1930.

JESSIE L. JORDAN,

(Notarial Seal) *Notary Public in and for Franklin County.*

My commission expires Feb. 14, 1933.

STIPULATION RE DEPOSITIONS.

(Filed April 4, 1930.)

[Case No. 965]

It is hereby stipulated by and between Counsel for the respective parties, the Honorable Court consenting, that Defendant's time for taking Depositions under the Supplemental Bill of Complaint in the above entitled case in accordance with the provisions of Equity Rule 47, shall be, and hereby is, extended to and including April 21, 1930, and the time of both parties for taking rebuttal depositions is extended accordingly.

RICHEY & WATTS,
Attorneys for Plaintiff.

March ...., 1930.

EDWIN P. CORBETT,
Attorney for Defendant.

March 15, 1930

It is so ordered.

GEO. P. HAHN, *Judge.*

STIPULATION RE DEPOSITIONS.

(Filed April 29, 1930.)

[Case No. 965]

It is hereby stipulated by and between Counsel for the respective parties, the Honorable Court consenting, that defendant's time for taking original depositions under the provisions of Equity Rule 47 shall be, and hereby is, extended to and including May 11, 1930, and both parties' time for taking rebutting depositions is extended accordingly.

RICHEY & WATTS,
Attorneys for Plaintiff.

April 22, 1930.

EDWIN P. CORBETT,
Attorney for Defendant.

April 21, 1930.

It is so ordered.

GEO. P. HAHN, *Judge.*

STIPULATION RE DEPOSITIONS.

(Filed April 29, 1930.)

[Case No. 965]

It is hereby stipulated by and between Counsel for the respective parties, the Honorable Court consenting, that Defendant's time for taking Depositions under the Supplemental Bill of Complaint in the above-entitled case in accordance with the provisions of Equity Rule 47, shall be, and hereby is, extended to and including May 6, 1930, and the time of both parties for taking rebuttal depositions is extended accordingly.

RICHEY & WATTS,

April 22, 1930. *Attorneys for Plaintiff.*

EDWIN P. CORBETT,

April 21, 1930. *Attorney for Defendant.*

It is so ordered.

GEO. P. HAHN, *Judge.*

STIPULATION RE DEPOSITIONS.

(Filed May 9, 1930.)

[Case No. 965]

It is hereby stipulated by and between Counsel for the respective parties, the Honorable Court consenting, that Defendant's time for taking Depositions under the Original and the Supplemental Bills of Complaint in the above-entitled case in accordance with the provisions of Equity Rule 47, shall be, and hereby is, extended to and including May 26, 1930, and the time of both parties for taking rebuttal depositions is extended accordingly.

RICHEY & WATTS,

May 7, 1930. *Attorneys for Plaintiff.*

EDWIN P. CORBETT,

May 9, 1930. *Attorney for Defendant.*

It is so ordered.

GEO. P. HAHN, *Judge.*

STIPULATION RE DEPOSITIONS.

(Filed May 29, 1930.)

[Case No. 965]

It is hereby stipulated by and between Counsel for the respective parties, the Honorable Court consenting, that Defendant's time for taking Depositions under the Original and Supplemental Bills of Complaint in the above-entitled case, in accordance with the provisions of Equity Rule 47, shall be, and hereby is, extended to and including June 26, 1930; and the time of both parties for taking rebuttal depositions is extended accordingly.

RICHEY & WATTS,
Attorneys for Plaintiff.

May 24, 1930.

EDWIN P. CORBETT,
Attorney for Defendant.

May 24, 1930.

It is so ordered.

GEO. P. HAHN, *Judge.*

ORDER PERMITTING SUBSTITUTION OF BOND.

(Entered May 29, 1930 by Geo. P. Hahn, Judge.)

[Case No. 965]

This cause came on to be heard at this term, upon Defendant's application to withdraw its Bond filed herein on June 6, 1929, for Fifteen Thousand Dollars ($15,000.00) and to substitute in place thereof a new Bond dated May 22, 1930, for the same amount and upon the same terms and conditions as the Bond now on file except with a change of Sureties, and due notice having been given the opposing party to this suit, and for good reasons shown, the application is granted.

And it is ordered that said Bond, dated May 22, 1930, for Fifteen Thousand Dollars ($15,000.00), with The Osgood Company as Principal and The United States Fidelity & Guaranty Company as Surety, be filed forthwith, and the same is hereby approved, and The American Surety Company is hereby released as Surety on the

former Bond filed herein on June 6, 1929, for Fifteen Thousand Dollars ($15,000.00).

GEO. P. HAHN,
United States District Judge.

Dated: May ...., 1930.

Entry of the foregoing Order is hereby consented to.

RICHEY & WATTS,
Dated: May 24, 1930. *Attorneys for Plaintiff.*

EDWIN P. CORBETT,
Dated: May 24, 1930. *Attorney for Defendant.*

BOND.

(Filed May 29, 1930.)

[Case No. 965]

THE UNITED STATES OF AMERICA,
NORTHERN DISTRICT OF OHIO,
WESTERN DIVISION, ss.

Know all men by these presents that The Osgood Company, as principal and the United States Fidelity and Guaranty Company as surety, are held and firmly bound unto Keystone Driller Company in the sum of Fifteen Thousand ($15,000.00) Dollars to the payment of which they bind themselves and each of them, their successors and assigns firmly by these presents. Sealed with our seals and dated this 22 day of May, 1930.

The condition of the above bond is such, that whereas an order of the District Court of the United States for the Northern District of Ohio, Western Division, made and dated on the 22nd day of April, 1929, in a suit in equity therein pending in which suit said Keystone Driller Company is plaintiff and said The Osgood Company is defendant has denied a motion for preliminary injunction upon condition that the said defendant give to the said plaintiff a bond in the sum of Fifteen Thousand ($15,000.00) Dollars for the payment of all profits or damages that may be decreed against the said defend-

ant in said cause by reason of the infringement of the patents sued on, between the date of said Order and the final decree herein, in said cause.

Now, if the said The Osgood Company shall pay to said Keystone Driller Company all profits or damages that are decreed against said The Osgood Company in this cause for the infringement of the patents described in the bill of complaint in said cause, between April 22, 1929, the date of said order, and the final decree in said cause, then these presents and this obligation shall be void; otherwise they shall remain in full force and effect.

THE OSGOOD COMPANY,
By M. C. MCNEIL,
Secy. (Corporate Seal)

THE UNITED STATES FIDELITY AND GUARANTY COMPANY,
By LEO E. REGAN,
Attorney in Fact. (Seal)

Approved: GEO. P. HAHN,
United States District Judge.

STIPULATION RE DEPOSITIONS.

(Filed June 11, 1930.)

[Case No. 965]

It is hereby stipulated by and between Counsel for the respective parties, the Honorable Court consenting, that Defendant's time for taking Depositions under the Original and the Supplemental Bills of Complaint in the above entitled case in accordance with the provisions of Equity Rule 47, shall be, and hereby is, extended to and including June 26, 1930, and the time of both parties for taking rebuttal depositions is extended accordingly.

RICHEY & WATTS,
June 6, 1930. *Attorneys for Plaintiff.*

EDWIN P. CORBETT,
June 5, 1930. *Attorney for Defendant.*

Approved
GEO. P. HAHN, *U. S. Dist. Judge.*

STIPULATION RE DEPOSITIONS.

(Filed June 28, 1930.)

[Case No. 965]

It is hereby stipulated by and between Counsel for the respective parties, the Honorable Court consenting, that Defendant's time for taking Depositions under the Original and Supplemental Bills of Complaint in the above-entitled case, in accordance with the provisions of Equity Rule 47, shall be, and hereby is, extended to and including July 26, 1930, and the time of both parties for taking rebuttal depositions is extended accordingly.

RICHEY & WATTS,
Attorneys for Plaintiff.

June 21, 1930.

EDWIN P. CORBETT,
Attorney for Defendant

June 20th, 1930.

It is so ordered.

GEO. P. HAHN, *Judge.*

STIPULATION RE DEPOSITIONS.

(Filed July 29, 1930.)

[Case No. 965]

It is hereby stipulated by and between Counsel for the respective parties, the Honorable Court consenting, that Defendant's time for taking Depositions under the Original and Supplemental Bills of Complaint in the above-entitled case, in accordance with the provisions of Equity Rule 47, shall be, and hereby is, extended to and including August 26, 1930, and the time of both parties for taking rebuttal depositions is extended accordingly.

RICHEY & WATTS,
Attorneys for Plaintiff.

July 21, 1930.

EDWIN P. CORBETT,
Attorney for Defendant.

July 19, 1930.

It is so ordered.

GEO. P. HAHN, *U. S. Dist. Judge.*

STIPULATION RE DEPOSITIONS.

(Filed August 27, 1930.)

[Case No. 965]

It is hereby stipulated by and between Counsel for the respective parties, the Honorable Court consenting, that Defendant's time for taking Depositions under the Original and Supplemental Bills of Complaint in the above-entitled case, in accordance with the provisions of Equity Rule 47, shall be, and hereby is, extended to and including September 20, 1930, and the time of both parties for taking rebuttal depositions is extended accordingly.

RICHEY & WATTS,

August 21, 1930. *Attorneys for Plaintiff.*

EDWIN P. CORBETT,

August 20, 1930. *Attorney for Defendant.*

O.K.: GEO. P. HAHN, *J.*

STIPULATION RE DEPOSITIONS.

(Filed Sept. 20, 1930.)

[Case No. 965]

It is hereby stipulated by and between Counsel for the respective parties, the Honorable Court consenting, that Defendant's time for taking depositions under the Original and Supplemental Bills of Complaint in the above-entitled case, in accordance with the provisions of Equity Rule 47, shall be, and hereby is, extended to and including September 30, 1930, and the time of both parties for taking rebuttal depositions is extended accordingly.

RICHEY & WATTS,

September 18, 1930. *Attorneys for Plaintiff.*

EDWIN P. CORBETT,

September 17, 1930. *Attorney for Defendant.*

It is so ordered.

JOHN M. KILLITS, *Judge.*

ORDER EXTENDING TIME OF DEFENDANT FOR TAKING DEPOSITIONS.

(Entered September 29, 1930, by Geo. P. Hahn, Judge.)

[Case No. 965]

It is hereby ORDERED that the Defendant's time for taking depositions in both the Original and Supplemental Bills be and hereby is extended to and including October 30th, 1930.

ORDER EXTENDING TIME FOR TAKING DEPOSITIONS.

(Entered Oct. 29, 1930, by Geo. P. Hahn, Judge.)

[Case No. 965]

It is hereby ordered that the Defendant's time for taking depositions in both the Original and Supplemental Bills be and hereby is extended to and including November 30th, 1930.

GEO. P. HAHN,
United States District Judge.

ORDER EXTENDING TIME FOR TAKING DEPOSITIONS.

(Entered Nov. 26, 1930, by Geo. P. Hahn, Judge.)

[Case No. 965].

It is hereby ordered that the Defendant's time for taking depositions in both the Original and Supplemental Bills be and hereby is extended to and including December 30, 1930. This is the last extension.

GEO. P. HAHN,
United States District Judge.

November 26th, 1930.

MOTION TO COMPEL PRODUCTION AND INSPECTION OF DOCUMENTS.

(Filed Dec. 19, 1930.)

[Case No. 965]

Now comes The Osgood Company, by its attorney, and moves this Court under Equity Rule 58, for an order to compel plaintiff herein to produce for inspection of defendant, within at least five days after the granting of this motion, with the right to make copies, the following documents in plaintiff's possession or under its control and containing evidence material to the defense herein, to-wit:

1. All papers "marked for identification" by plaintiff, as plaintiff's exhibits A to I, inclusive, during the taking of the deposition of Bernard R. Clutter at Lakewood, N. J., October 21st, to 23rd, 1930.

2. The canceled check for $476.00 issued by the Keystone Driller Company on or about February 16, 1928, to Bernard R. Clutter, and referred to in the Keystone Driller Company's letter dated December 17, 1928, to Mr. Bernard R. Clutter, 17 Edgewood Court, Lakewood, N. J.

3. The original memorandum of agreement dated April 11, 1925, between Bernard R. Clutter and the Keystone Driller Company and referred to in the letter of the Keystone Driller Company to Mr. Burn R. Clutter, 17 Edgewood Court, Lakewood, N. J., dated December 4, 1928.

4. The contract, mortgage, notes, books of account, showing credits and debits relating to the Keystone Driller Company's excavator, shop number 4918 shipped to the Clutter Contracting Co., March 9, 1925, on Pennsylvania Railroad car 925186 and invoiced by the Keystone Driller Company on March 9, 1925, to Clutter Contracting Company, Lakewood, N. J., Keystone Driller Company, order No. SS-1792, and correspondence between the Keystone Driller Company and Bernard R. Clutter or The Clutter Contracting Company, relating to the said excavator.

5. The contract, mortgage, notes, books of account showing credits and debits relating to the Keystone Driller Company's excavator, shop number 5,009 shipped to the Clutter Contracting Com-

pany, Tuckerton, N. J., on July 14, 1925, on N. P. car 68,513 and invoiced by the Keystone Driller Company to the Clutter Contracting Company, Lakewood, N. J., July 14, 1925, Keystone Driller Company Order No. SS-1902, and correspondence between the Keystone Driller Company and Bernard R. Clutter or the Clutter Contracting Company relating to said excavator.

6. Any and all papers, documents, records, correspondence, reports in the possession of or under the control of the Keystone Driller Company relating to the transaction between Keystone Driller Company and Bernard R. Clutter as testified to in the deposition of Bernard R. Clutter and Frederick W. Ransom, and or relating to the memorandum of agreement between Bernard R. Clutter and the Keystone Driller Company dated April 11, 1925.

This motion is supported by the affidavits of Edwin P. Corbett and John J. Mahoney which are attached hereto and made part hereof as defendant's Exhibits A and B, respectively.

EDWIN P. CORBETT,
Attorney for Defendant.

December 15, 1930.

Notice.

Messrs. Richey & Watts,
Attorneys for Plaintiff,
1090 Union Trust Building,
Cleveland, Ohio.

Gentlemen:

Please take notice that the above Motion will be presented to his Honor, Judge Hahn, in the Court Room, Federal Building, Toledo, Ohio, on the 20th day of December, 1930, at 9:30 o'clock A. M., or as soon thereafter as counsel may be heard.

EDWIN P. CORBETT,
Attorney for Defendant.

A copy of the above Motion, Notice and Affidavits were today mailed to Messrs. Richey & Watts, Attorneys for Plaintiff, 1090 Union Trust Building, Cleveland, Ohio.

EDWIN P. CORBETT,
Attorney for Defendant.

December 15, 1930.

AFFIDAVIT OF EDWIN P. CORBETT IN SUPPORT OF MOTION.

(Filed Dec. 19, 1930.)

[Case No. 965]

STATE OF OHIO,
COUNTY OF FRANKLIN, SS.

Edwin P. Corbett, being first duly sworn, deposes and says that he is attorney for the defendant in the above-entitled cause; that the above-entitled suit is based upon alleged infringement of defendant of certain United States Letters Patent that are alleged to be owned by the Keystone Driller Company, plaintiff herein.

That one of the patents sued on by the plaintiff is the patent issued to Robert Rex Downie, an officer of the plaintiff company, United States Letters Patent No. 1,511,114; that the defendant herein has set up as a defense to the suit for infringement on Downie patent No. 1,511,114 various defenses among which is the defense that Robert Rex Downie was not the first, true or original inventor of the alleged invention described and claimed in Downie patent No. 1,511,114.

In support of its defense, as to this particular Downie patent No. 1,511,114, the defendant has taken the depositions of Bernard R. Clutter, Phil C. Culbertson, W. L. Culbertson, John Cummings, M. A. Elsner, Lysle L. Hazen, Herbert H. Wallower, which show that Robert Rex Downie was not the first, true and original inventor of the United States Letters Patent issued to him as No. 1,511,114, but that Bernard R. Clutter and Herbert A. Wallower were really the first inventors of the alleged invention described and claimed in said patent, and had publicly used the same at Joplin, Mo. in the early part of the year 1920. All of these depositions are now on file with this Court.

I have read an additional deposition, taken on the 21st, 22nd and 23rd days of October, 1930, at Lakewood, New Jersey, in which Bernard R. Clutter testified that Robert Rex Downie, Secretary and General Manager of the Keystone Driller Company, voluntarily came down to see him at Lakewood, New Jersey, in the early part of the year 1925. Clutter testified that although Downie was accompanied by another employee of the Keystone Driller Company, that he called Clutter out-

side into the yard of his home and engaged him in a private conversation.

In this conversation, Clutter said that Downie recognized that Bernard R. Clutter was the real inventor of the device patented by Robert Rex Downie in patent No. 1,511,114. From Clutter's testimony, it appears that in his conversation, Downie brought out that the Keystone Driller Company were about to bring suit on their patent No. 1,511,114 and that they wanted to make sure that Bernard R. Clutter would not disclose to any one the fact that Clutter, and not Downie, was the real inventor of the alleged invention described and claimed in said patent.

Downie's proposition to Clutter was that if Clutter would keep silent about the real facts as to the inventorship of this patent, that the Keystone Driller Company would give Clutter a one-half interest in a new Keystone excavator which credit would amount to somewhere in the neighborhood of four thousand dollars ($4,000.00); that Downie told him that if Clutter agreed to this proposition, the Keystone Driller Company would make out the papers for the machine in full, and secretly give to Clutter a credit on the Keystone Driller Company's books, amounting to approximately four thousand dollars ($4,000.00). Clutter testified that as he had never received any money for his invention that he agreed to this proposition and ordered a Keystone Driller Company excavator, which was delivered to him.

Clutter testified that subsequently the Keystone Driller Company submitted a series of papers for his signature which he was told were necessary in order to bind him hand and foot to the proposition made to him by Downie; that later, the Keystone Driller Company repossessed the machine upon which Clutter had been given the credit, but as the Keystone Driller Company's suit against The Byers Machine Company on this particular patent was still pending in Cleveland, the Keystone Driller Company apparently feared that Clutter might make known the real facts as to this particular patent and, therefore, agreed to give Clutter a cash settlement in lieu of the machine credit in the amount of approximately one thousand nine hundred and four dollars ($1904.00). Clutter further testified that upon one pretext or another, the Keystone Driller Company failed to live up to their agreement as to the cash settlement made

with Clutter but that finally after much correspondence between the parties, the Keystone Driller Company issued him a check for four hundred and seventy-six dollars ($476.00) in furtherance of this illegal transaction.

Clutter's testimony in this respect was corroborated by original letters and other papers of the Keystone Driller Company written to Clutter and introduced in evidence as defendant's Exhibits 37, 38, 39, 40 and 41. Clutter's testimony in this respect was further corroborated by the testimony of Frederick W. Ransom, a former officer of the Keystone Driller Company.

If the papers requested in the motion are produced, they will further corroborate and fully prove the testimony of Bernard R. Clutter that the Keystone Driller Company recognized and admitted that Clutter was the first and true inventor of Downie patent No. 1,511,114 in suit.

All of the papers requested in defendant's motion relate directly to and were mentioned in and referred to in the Clutter deposition above mentioned, and will be material evidence in proving defendant's claim that Downie was not the real inventor of the patent sued upon No. 1,511,114.

The papers requested in this motion are all within the possession and control of the plaintiff, and it is necessary that they be produced in order for defendant to make full proof of the defense set out in its answer that Robert Rex Downie is not the first inventor of Downie patent No. 1,511,114.

EDWIN P. CORBETT.

Sworn to and subscribed before me this 15th day of December, 1930.

JESSIE L. JORDAN,
Notary Public in and for Franklin Co.

(Seal)

My commission expires Feb. 14, 1933.

AFFIDAVIT OF JOHN J. MAHONEY IN SUPPORT OF MOTION.

(Filed Dec. 19, 1930.)

[Case No. 965]

STATE OF OHIO,
COUNTY OF FRANKLIN, SS.

John J. Mahoney, being first duly sworn, deposes and says that he is one of the Attorneys for the defendant in the above entitled cause; that he has represented The Osgood Company, defendant herein, during the taking of various depositions to be used on behalf of the defendant in the above entitled cause.

That one of the patents sued on by the plaintiff in this suit is a patent to Robert Rex Downie, an officer of the plaintiff Company, United States Letters Patent No. 1,511,114; that the defendant herein has set up as a defense to the suit for alleged infringement of said Downie patent No. 1,511,114 the fact that said patentee, Downie, was not the first, true or original inventor of the alleged invention described and claimed in said Downie patent No. 1,511,114.

In support of this defense, as to this particular patent, the defendant has taken the depositions of Bernard R. Clutter, Phil C. Culbertson, W. L. Culbertson, John Cummings, M. A. Elsner, Lysle L. Hazen, Herbert H. Wallower. All of these depositions show that Bernard R. Clutter and Herbert H. Wallower were really the first inventors of the alleged invention described and claimed in said patent in suit. The depositions of these various persons taken at Lakewood, N. J., Joplin, Mo. and Leadville, Col. show that the device shown in the Downie patent 1,511,114 was publicly used at Joplin, Mo. in the early part of 1920 by Bernard R. Clutter and Herbert H. Wallower prior to any use by the Keystone Driller Company. All of these depositions are now on file in this Court.

Deponent was present at Lakewood, N. J. on the days of October 21, 22, and 23, 1930 at the taking of the deposition of Bernard R. Clutter for use on behalf of the defendant herein. In said Deposition, Bernard R. Clutter testified that he was the same Bernard R. Clutter who had given a previous deposition in this case about the public use at Joplin, Mo. of the alleged invention shown in the Downie patent 1,511,114. In his previous deposition, Bernard R. Clutter had testified that

the officials of the Keystone Driller Company had known about his public use of this device.

Clutter testified that in the early part of the year 1925, Robert Rex Downie, an officer of the Keystone Driller Company, voluntarily came down to see him at his home at Lakewood, N. J. That with Downie at this time was a man named Howard Elmire, an employee of the Keystone Driller Company; that Downie told Clutter on this occasion that he wanted to speak to him privately and leaving Elmire in his house, they stepped out into the yard of his home, and Downie told him then that he had come to see him about the device that Clutter had publicly used at Joplin in the early part of 1920.

Downie then explained to Clutter that the Keystone Driller Company had subsequently taken out a patent on this device. Clutter said that he called Downie's attention to the fact that the Keystone Driller Company had no right to do this, as this was his invention. Downie then told Clutter that they had the patent and that Clutter did not have money enough to fight them for it. Clutter then testified that Downie informed him that the Keystone Driller Company were about to bring suit on this Downie patent 1,511,114 and that before doing this, they wanted to make sure that Clutter would not disclose to any one his public use of this device at Joplin, Mo. in the early part of the year 1920. Clutter said that Downie told him that if he would keep silent about the real facts of the inventorship of this patent, that the Keystone Driller Company would give Clutter a one-half interest in a new Keystone excavator which credit would amount to somewhere in the neighborhood of four thousand dollars; and that if Clutter would agree to this proposition, the Keystone Driller Company would make out the papers for the purchase of the machine in full and secretly give to Clutter the credit on the Keystone Driller Company's books to the amount of approximately, four thousand dollars. Clutter testified that as he had never received any money for his invention that he agreed to this proposition and ordered a Keystone Driller excavator, which was later delivered to him.

Clutter testified that subsequently the Keystone Driller Company submitted a series of papers for his signature which he was told were necessary in order to "bind him hand and foot" to the proposition made to him by Downie; that later, The Keystone Driller Company repossessed the machine upon which Clutter had

been given the credit, but as the Keystone Company's suit against The Byers Machine Company on this particular patent was still pending in Cleveland, the Keystone Driller Company apparently feared that Clutter might make known the real facts as to this particular patent and therefore, agreed to give Clutter a cash settlement in lieu of the machine credit in the amount of approximately $1904.00. Clutter further testified that upon one pretext or another, the Keystone Driller Company failed to live up to their agreement as to the cash settlement made with Clutter but that finally after much correspondence between the parties, the Keystone Driller Company issued him a check for $476.00 in furtherance of this illegal transaction.

Clutter's testimony in this respect was corroborated by original letters and other papers of the Keystone Driller Company written to Clutter and introduced in evidence as defendant's Exhibits 37, 38, 39, 40 and 41. Clutter's testimony in this respect was further corroborated by the testimony of Frederick W. Ransom, a former officer of the Keystone Driller Company, in a deposition taken at Akron, Ohio, October 24, 1930 now on file in this Court.

Deponent further states that all of the papers described in paragraphs 1 to 6 inclusive of defendant's motion relate directly to the said transaction between the Keystone Driller Company and Bernard R. Clutter as set forth in the Clutter deposition at Lakewood, N. J., October 21 to 23 inclusive, 1930.

There is no question but what all of these papers are in the possession of or under the control of the Keystone Driller Company. Deponent knows that Counsel for plaintiff called the Keystone Driller Company on long distance telephone and requested that all of the papers described in paragraph 1 of this motion be sent down to him from Beaver Falls, Pa. and that the next day, a messenger from the Keystone Driller Company delivered these papers to Counsel for plaintiff. Counsel for plaintiff, A. H. Edgerton, has since advised deponent that all of the papers described in paragraph 1 of defendant's motion were again turned back by him to the Keystone Driller Company.

As to the other papers referred to in paragraphs 2 to 6 inclusive of defendant's motion, the witness Clutter testified that they were executed by him and turned over to the Keystone Driller Company and must necessarily

then be in the possession of the Keystone Driller Company, or under its control.

In addition to the depositions of the witnesses previously referred to, to the effect, that the alleged invention described and claimed in the Downie patent 1,511,114 was really the invention of Clutter and Wallower, the papers requested in this motion will further prove that this fact was recognized by the Keystone Driller Company, and these papers are therefore all material to the defense of the defendant that Robert Rex Downie was not the first, original or true inventor of the alleged inventions described and claimed in United States Letters Patent No. 1,511,114. Deponent believes that if the papers requested are produced they will enable defendant to make full proof of this fact.

Deponent further believes that the plaintiff should be compelled to produce these papers within at least five days from the granting of this motion because they consist of books of accounts, letters, contracts, and other documents that will require considerable study and because the taking of this testimony has been limited by the Court to December 30, 1930; and that as this plaintiff is located out of the district and more than one hundred miles from place of trial herein, it will be impossible for the defendant to subpoena or take the testimony of any witnesses if inspection of the papers requested in this motion shows that this should become necessary unless the defendant is given prompt access to these papers before its time for taking testimony expires.

Deponent believes that defendant is entitled to production and inspection of all of the papers in question in this motion because they contain evidence material to the defense, that the patentee, Downie, of United States Letters Patent No. 1,511,114 is not the true inventor of the alleged invention described in claim therein. The papers are all within the possession or control of the plaintiff, and should therefore be produced for inspection of defendant in accordance with the provisions of Equity Rule 58.

JOHN J. MAHONEY.

Sworn to and subscribed before me, this 15th day of December, 1930.

JESSIE L. JORDAN,
Notary Public in and for Franklin Co.

(Seal)
My Commission Expires Feb. 14, 1933.

AFFIDAVIT OF A. H. EDGERTON.

(Filed Dec. 20, 1930.)

[Case No. 965].

STATE OF OHIO,
COUNTY OF CUYAHOGA, SS.

A. H. Edgerton, being duly sworn deposes and says:

I am counsel for the Plaintiff herein, Keystone Driller Company. I was out of the city engaged in taking depositions the early part of this week, returning to Cleveland Thursday, the 18th of December. Upon my return I found the Motions of The General Excavator and The Osgood Companies which were received in this office on the 16th and 17th of December respectively. My associates in this office immediately advised our local solicitor, Mr. Kirk, of my absence from the city and inability to prepare for the attendance at the hearing requested Saturday, December 20th. This office also communicated with counsel for the Defendants requesting additional time be granted for the hearing of said Motion. Counsel for the Defendants, however, would not concede to this request unless we gave them another thirty day extension for taking depositions which was rejected by my associates.

This office then forwarded our associate, Mr. Kirk, an Order requesting more time be granted to prepare for the hearing, but we were advised this morning that the same had been denied because of the absence from the city of Mr. Williams, associate for Defense counsel, and his assent thereto.

Affiant has communicated with Mr. Downie but has been unable, with the short notice, to prepare for the hearing on the Motion, Saturday, December 20th.

On information and belief affiant avers that Robert Rex Downie is the inventor of the machine shown in patent No. 1,511,114 in suit which was assigned to The Keystone Driller Company before October 7th, 1924. That he made the invention of this machine before he learned of the Clutter machine or the experimental use of that machine which was referred to in the affidavits submitted with the Defendants' motions. After Mr. Downie learned of the Clutter machine and its experimental use, he made an investigation of the same through employees of the Keystone Driller Company and others. He learned that the use had been experimental and that the machine had been abandoned. He also learned of the

character of the machine and found that it did not contain the inventions of the machine of patent No. 1,511,-114. Therefore he proceeded to file the application from which patent No. 1,511,114 issued.

At the time the Keystone Driller Company contemplated bringing suit upon this patent, he made a further investigation of the Clutter machine and its experimental use and found further his information and conclusions to be correct. Among those who affirmed this information and these conclusions was Bernard R. Clutter, who furnished him an affidavit to that effect which will be produced at the trial in this case and made part of the evidence in the case, if the Court considers it material.

Counsel for the Defendants have already inspected papers marked by the Plaintiff for identification A to I inclusive.

Affiant not being afforded sufficient time to prepare for the hearing on the Defendant's Motion on December 20th, is respectfully submitting herewith the Plaintiff's memorandum relating to this matter.

A. H. EDGERTON.

Subscribed and sworn to before me this 19th day of December, 1930.

J. D. DOUGLASS,

(Seal) *Notary Public.*

My Commission Expires July 21, 1933.

AFFIDAVIT OF F. O. RICHEY AND A. H. EDGERTON.

(Filed Dec. 31, 1930.)

[Case No. 965]

STATE OF OHIO,
COUNTY OF CUYAHOGA, SS.

F. O. Richey and A. H. Edgerton being duly sworn, depose and say:

We are members of the firm of Richey & Watts, who have and do represent the Plaintiff in numerous suits brought upon the Downie patent No. 1,511,114, includ-

ing the Byers case which has been decided by the Court of Appeals and the two suits at bar. One or both of us have been closely associated with the litigation over this patent ever since it was instituted. Mr. Richey has conducted all of these suits for the Plaintiff, and Mr. Edgerton has assisted in all of them and has attended the taking of all of the depositions taken in the above entitled case, including those by Mr. Clutter.

We are familiar with the testimony regarding the Joplin experiment and with the machine said to have been used therein and illustrated in Defendant's Exhibit 26. In the opinion of both and each of us the work at Joplin was an abandoned experiment and the machine illustrated in Exhibit 26 embodies none of the inventions of the Downie patent No. 1,511,114, and is described by none of the claims in that patent. In our opinion the machine illustrated in Exhibit 26 is not capable of operating and did not operate according to the machine of the said Downie patent or realized the advantages or results of that machine upon which its patentability has been sustained by Judge Jones or the Court of Appeals in this Circuit.

The Joplin machine contains certain elements and operates in certain respects as does the machine of the patent, but that is true of a great many of the machines relied upon by the Defendant in the Byers case, and was not sufficient to defeat the patentability of the machine in the courts. Many of the operations and functions of the machine of the patent are not even claimed by Defendant's witnesses to have been realized by the machine of Exhibit 26 and at least one such that some of the witnesses claim, in our opinion, the machine of Exhibit 26 is clearly incapable of performing.

We have gone over the brief filed with this affidavit and we are informed and believe that the facts stated in said brief on information and belief are true.

In coming to the conclusion that the Joplin work was an abandoned experiment we have been persuaded by the holding of the Supreme Court in *Elizabeth vs. Pavement,* 97 U. S. 126, and by the Court in this District (Westenhaver, *J.*) in *Buckeye vs. Wolf,* 291 Fed. 253 which was affirmed by the Court of Appeals in this Circuit in *Wolf vs. Buckeye,* 296 Fed. 680, which has further been affirmed by numerous other courts on the patents involved in those suits.

(*Buckeye v. Cooley,* 17 Fed. (2d) 453, C. C. A. 3d Cir.;
Buckeye v. Petersine, 19 Fed. (2d) 721, C. C. A. 6th Cir.;
Buckeye v. Hillpot, 24 Fed. (2d) 341, C. C. A. 3d Cir.;
Buckeye v. Blum, 27 Fed. (2d) 333, C. C. A. 6th Cir.).

Further affiants sayeth naught.

F. O. RICHEY,
A. H. EDGERTON.

Sworn to before me and subscribed in my presence this 29th day of December, 1930.

J. D. DOUGLASS,
Notary Public.

(Seal)
My Commission Expires July 21, 1933.

AFFIDAVIT OF ROBERT REX DOWNIE.

(Filed Dec. 31, 1930.)

[Case No. 965]

STATE OF OHIO,
COUNTY OF CUYAHOGA, SS.

Robert Rex Downie, being duly sworn, deposes and says:

I am the inventor of patent No. 1,511,114, and I am an officer of the Plaintiff company.

I invented the excavating machine disclosed in that patent prior to learning anything about the machine or the experiment at Joplin. News came to me of the Joplin machine and experiment, however, before I filed my patent application from which the said patent issued.

As soon as I learned of the Joplin machine and experiment, I investigated the same and reported what I learned about the machine and the experiment to Mr. E. G. Siggers of Washington, D. C. who was at that time our patent attorney, and who is now deceased. I also reported to him my own work on the machine of the patent. Mr. Siggers reported that the Joplin experiment was an abandoned experiment. He also advised that the patent application should be filed in my name which was done at his advice. He prepared the application for the patent, advising me that it did not embody any invention in the Joplin machine and accordingly I signed the same and it was filed.

I have examined the machine illustrated in Defendant's Exhibit 26 and have read the testimony given in connection therewith by witnesses called for the Defendant. I find that none of the inventions in the Downie patent No. 1,511,114 are embodied in this machine. I find that the machine illustrated in Exhibit 26 is incapable of performing the important functions of the patented machine or of operating as the patented machine does. After the infringement of this patent by The Byers Company, I made further investigations regarding the Joplin experiment and the Joplin machine for the purpose of submitting this information to Mr. Phillip E. Siggers and to Mr. Janney of the patent law firm of Emery, Booth, Janney & Varney. Among those whom I interviewed was Mr. Burn Clutter who had been associated with the Joplin machine and the Joplin experiment. I had known Mr. Clutter for a number of years. He had at one time been employed by our company and we had had considerable dealings with him and were familiar with his character and disposition. I was interested that the facts which he reported to me about the Joplin experiment and the Joplin work and which I reported to my patent lawyers should be preserved, as I did not want him later to change his story. It also occurred to me that there might be some patentable invention about the ditcher scoops which were employed on the Joplin machine and whose history after they were removed from the machine I was unfamiliar with. I knew the Joplin machine had been dismantled and abandoned, but I did not know what had become of the scoops that were used upon it.

At that time Mr. Clutter wanted to buy an excavator and did not have the money to buy it. Accordingly, I

made him a proposition to waive the final payments on such a machine if he would assign to the Keystone Driller Company a quit claim to all right, title and interest he had in the excavator scoops and furnish me an affidavit containing the information which he had given me regarding the Joplin machine and the Joplin work in order that I would be protected as against what I reported to the patent lawyers. Mr. Clutter told me and stated in his affidavit among other things, as follows:

> "Experimentation was abandoned; and so far as I was concerned this was because of the extreme care required to make the device as a whole operative especially the latching arrangement; and because I did not conceive the advantage of the dumping bottom to be of sufficient practical worth to justify the expense of the re-design and further experimentation which would have been necessary in my opinion to make the device commercially useful."

I did not ask Mr. Clutter to sign the affidavit until he had fully considered the same and read it over. What he told me about the abandonment of the machine and experiment had been also told me by others who had seen or worked with the Joplin machine and experiment. The proposed deal by us is set forth in the Memorandum Agreement marked "Appendix A" and attached to the brief filed herewith, though this Memorandum was never signed by the parties. There was no other Memorandum of Agreement oral or written between Mr. Clutter and me, or the Keystone Driller Company regarding this matter.

My purpose in making the waiver of the payments contingent upon the success of the patent litigation was that if the patents on the excavator failed, even a quit claim upon any invention in the scoops would be of little or no value to us.

I then submitted the information I had gathered from Mr. Clutter and others regarding the Joplin machine to Mr. Phillip E. Siggers and to Mr. Janney. Both advised that in their opinion the Joplin experiment was an abandoned experiment and the Joplin machine did not anticipate or negative the novelty of the patent, No. 1,511,114. Later the same questions were submitted to F. O. Richey of Richey & Watts and he rendered the same opinion. After receiving the opinions of Mr. Janney and Mr. Phillip E. Siggers, the suit was instituted

against The Byers Company and was decided in our favor in January, 1929.

In the meantime Mr. Clutter had begun to default on his payments and it was necessary for the company to re-possess the machine. It was then, and not until then, that Mr. Clutter began to intimate that he understood that one of the considerations for the waiving of these payments was his concealing or suppressing the testimony, although I had made no such agreement with Mr. Clutter. Our reply to him was that he was at liberty to tell any and everybody he pleased about the Joplin machine and Joplin experiment, as we had fully investigated the same and submitted it to our attorneys who had reported that it was an abandoned experiment and did not anticipate anyhow. We also told Mr. Clutter what he well knew that the Joplin machine and Joplin experiment were known to a number of people. Then we went ahead and repossessed the machines. We heard little more from Mr. Clutter until after Judge Jones decided the Byers case in our favor and the patents became valuable. Then Mr. Clutter again approached us in such a manner and with such words as to lead us to believe that he was proposing that for compensation from us he would remain silent or conceal what he knew about the Joplin work and machine. We were also approached by his brother, Mr. B. C. Clutter, and by Mr. George E. Wagner, a friend of Mr. Clutter, in such a manner and with such words as to lead us to believe that they were either acting for themselves or for Mr. Burn Clutter in making similar proposals to us. In consequence we wrote to Mr. B. C. Clutter the letter attached to the brief filed herewith and marked "Appendix B" and to Mr. Wagner the letter attached to the brief and marked "Appendix C". We received a letter from Mr. Wagner written on behalf of himself and Mr. B. C. Clutter, denying that they had in mind making any proposal to us to suppress or conceal any evidence for a compensation.

We heard no more of this matter until the Defendant in this case served notice of the taking of the testimony of Mr. Burn Clutter.

I have read the depositions given by Mr. Clutter in this case. I attended the first deposition. During a recess in the first deposition Mr. Clutter asked for a conference with me after the termination of the deposition. This conference was never had and later he returned and gave the second deposition. I have read over

the second deposition, particularly the reports he has made of the interviews he had with me and I deny that I either at the interviews which he reported, or at any other time, made him any offer or made any request that he either suppress or conceal any evidence regarding the Joplin machine or the Joplin experiment. Manifestly, it would have been absurd for me to make such an offer had I been disposed to do so, which I was not, because all the evidence which Mr. Clutter had about either the Joplin machine or experiment was known to a half dozen or more other people, most of whom were not in our employ and some of whom had been released from our employ since the experiment was made.

ROBERT REX DOWNIE.

Subscribed and sworn to before me this 30th day of December, 1930.

FLORENCE KOFSKY,
Notary Public.

(Seal)

OFFER BY PLAINTIFF TO PRODUCE LETTERS, DOCUMENTS, ETC.

(Filed Dec. 31, 1930.)

[Case No. 965]

Now comes the Plaintiff and offers to submit to counsel for the Defendant in the above entitled cause, for inspection, all of the letters and other documents which are marked for identification by Plaintiff's counsel in the above entitled cause, the cancelled check and the Memorandum Contract, the mortgages, notes, etc. and all of the correspondence between Clutter and his company, on the one hand, and Plaintiff, on the other hand, regarding the two excavating machines which were

repossessed by the Plaintiff from Mr. Clutter and concerning which Mr. Clutter testified; this submission and inspection to be at the office of Richey & Watts, 1090 Union Trust Building, Cleveland, Ohio, at a time in the near future suitable to counsel for both parties. And, moreover, Plaintiff offers to furnish, at Defendant's expense, to Defendant's counsel, copies of any of these documents which Defendant's counsel will agree to offer in evidence at the hearing in the above entitled cause.

This offer is made without Plaintiff conceding that any of these documents or letters are material to any issue in this cause and without waiving any right to object or to move to strike out, or to take other action, regarding such letters and documents, or any evidence concerning the same.

RICHEY & WATTS,
Counsel for Plaintiff.

SECOND AFFIDAVIT OF JOHN J. MAHONEY.

(Filed Jan. 2, 1931.)

[Case No. 965]

STATE OF OHIO,
COUNTY OF FRANKLIN, SS.

John J. Mahoney, being first duly sworn, deposes and says that he is one of the attorneys for defendant in the above entitled case and that he has read Plaintiff's Second Brief on Motion to Produce certain documents in the above-entitled case and particularly that portion of the brief beginning on page 4 and which reads as follows:

"No demand or request has been made by either Defendant upon the Plaintiff for the inspection of

any letters or other documents which has been refused (except the affidavit when first produced and which has since been submitted to and inspected by counsel for each of the Defendants). The motions are made without any previous demand or request upon Plaintiff for the documents now demanded in the motions."

The above quoted statement is untrue. At the taking of the Bernard R. Clutter deposition at Lakewood, N. J., October 21 to 23, 1930, inclusive, deponent began to make notes of the contents of the papers produced for identification as Plaintiff's Exhibits A to I, inclusive, which are requested in paragraph 1 of this Motion, and thereupon Mr. A. H. Edgerton, who was Counsel for the Plaintiff at that hearing, voluntarily promised deponent and Mr. Edward L. Reed, Counsel for the Defendants at that hearing, photostatic copies of the documents offered for identification by Plaintiff as Exhibits A to I, inclusive, as soon as he returned to Cleveland, telling us that it would therefore be unnecessary to make any copies of the documents in question. After the testimony session was ended, Counsel for Defendant waited several days for these papers and then called Mr. A. H. Edgerton on the long distance telephone and tried to find out when we would be furnished with the papers promised us. Counsel for Plaintiff, Mr. Edgerton, made some sort of an excuse to the effect that papers were being used for some purpose and that we would be furnished with these copies later on. Counsel for Defendant therefore waited for several more days but not hearing from Counsel for Plaintiff on November 4, 1930, made a written demand for the papers referred to in paragraph 1 of this Motion. A copy of this written demand, dated November 4, 1930, addressed to Messrs. Richey & Watts, 1090 Union Trust Building, Cleveland, Ohio, is attached hereto as "Exhibit A" and made a part hereof.

In addition to this written demand, deponent subsequently upon various occasions made further oral demands and requests that documents be furnished to Counsel for Defendant. At no time did Mr. A. H. Edgerton deny that these documents had been promised to Counsel for Defendant but always gave as reasons for not having complied with this promise, the fact that the documents were in the hands of Mr. Downie or were be-

ing used by them for investigation purposes, or gave other vague reasons for not producing these papers.

Counsel for Defendants were, therefore, led to believe all the time, and for several months that eventually these documents would be turned over to them. Even as late as a day or two before filing this present Motion, deponent called Mr. A. H. Edgerton, Counsel for Plaintiff, on the long distance telephone, at Cleveland, Ohio, and made a further request for these various documents. Upon this occasion, Mr. Edgerton gave the usual excuse that these documents were going to be used by him for some investigation and that he could not turn them over at that time. It therefore became evident to Counsel for Defendant that Mr. A. H. Edgerton had no intention of keeping his promise to turn over these papers to Counsel for Defendant and this motion was then brought.

I have read the Affidavit of Robert Rex Downie, dated December 30, 1930, and filed herein, and particularly that part of the Affidavit that reads as follows: Page 4, lines 10 to 21 inclusive—

> "In the meantime Mr. Clutter had begun to default on his payments and it was necessary for the company to repossess the machine. It was then, and not until then, that Mr. Clutter began to intimate that he understood that one of the considerations for the waiving of these payments was his concealing or suppressing the testimony, although I had made no such agreement with Mr. Clutter. Our reply to him was that he was at liberty to tell any and everybody he pleased about the Joplin machine and Joplin experiment, as we had fully investigated the same and submitted it to our attorneys who had reported that it was an abandoned experiment and did not anticipate anyhow * * *."

I have also read the Plaintiff's Second Brief on this Motion, filed December 31, 1930, and particularly that portion of the brief, page 14, which reads as follows:

> "(2) If Plaintiff or Mr. Downie were undertaking to suppress Mr. Clutter's testimony, they would never have repossessed the machines, particularly in the face of his threats to disclose the evidence if they did repossess them."

The statements of Mr. Downie, and the statement in the Brief above quoted are at variance with Mr. Clut-

ter's testimony in the deposition taken at Lakewood, N. J., October 21 to 23, inclusive, as well as statements which appear in letters addressed to Bernard R. Clutter by the Keystone Driller Company as to what took place when they threatened to repossess the machines in question from Mr. Clutter. Mr. Clutter's testimony in this regard reads as follows: Bernard R. Clutter's deposition, Oct. 21 to 23, 1930, page 17.

"Q. 104. Will you relate as nearly as you can the conversation you had with Mr. Rex Downie on this occasion near Roseland, N. J."

"A. Rex informed that they would have to take the machine back unless I could raise the money immediately, or a portion of it. I informed him that if he took the machine away from me that it meant that I would lose anything that I might realize from the patent on the drop bottom ditcher scoop, and that if he did take the machine away that it was not going to do him any good. He said that he did not want me to feel that way about it, and I informed him that those were the facts and he could take it or leave it, and that eventually I could pay him every cent that I owed the company for that machine. He then offered to substitute a cash proposition instead of the credit proposition that I was formerly to have on the machine. His proposition was that they pay me half the amount of the anticipated credit in cash * * * ."

"Q. 106. By credit proposition do you mean the proposition that Rex made to you in the early part of 1925 at Lakewood agreeing to give you a half interest in a Keystone excavator in consideration of your keeping quiet about the development you made on the drop bottom instroke scoop at Joplin, Missouri."

"By Mr. Edgerton: Objected to as leading."

"A. I do."

"Q. 107. The cash proposition then was to be a substitute for the credit proposition that was made to you at Lakewood in 1925."

"A. It was."

"Q. 108. Was the amount of the cash consideration they were to give you as a substitute for the machine credit, mentioned at Roseland in your conversation with Mr. Downie?"

"A. It was gone into and estimated that it would amount to around $2,000.00, and after it was totalled up the deductions on the parts and credits for the attachments at Arlington, that I was to have from the Keystone Driller Company on the machine amounted to $3800.00. Therefore the cash proposition amounted to $1904.00."

"Q. 109. And you agreed to accept this cash consideration in lieu of the machine credit which had been granted to you on the machine you purchased from the Keystone Driller Company in the year 1925."

"A. I did."

Mr. Clutter's testimony in this regard as to what took place when they took over these machines is corroborated by the letter dated November 23, 1928, from the Keystone Driller Company to Burn Clutter, Lakewood, N. J., introduced in evidence as Defendant's "Exhibit No. 38," which reads as follows:

"KEYSTONE DRILLER COMPANY
Beaver Falls, Pa.
November 23, 1928.

Mr. Burn Clutter,
17 Edgewood Court,
Lakewood, N. J.

Dear Burn:

We have your letter of November 15th and are glad to see that you are still able to argue fluently. Writer has referred to our letter of February 16th with which we enclosed check for $476.00 and by the receipt of which you indicated your satisfaction with the amount of $952.00 as the contingent cash credit substituted for the original machine credit,—which in turn went astray because of our having to take the machine back.

Now the other half of the contingent cash was not to become payable until and unless our case should be satisfactorily decided by the end of 1928. No decision has been made as yet. The case drags for various reasons.

If your parts account has been in good shape writer would have no difficulty in securing general approval of these cash remittances, but the fact is the accounting department is being held out of a

substantial parts bill which amounts to more than the contingent credit which you still have and which will become due in case the case is settled in accordance with our original deal by the end of 1928.

This leaves the writer nothing to do except point out that you owe us more than we would owe you even if the case were settled,—and that the case is not in fact settled. Hence we cannot say that we feel that there is anything due you under these circumstances.

Writer is sorry that we cannot do any better, but feels that we have no reason to actually exceed the spirit of the deal as made. (Instead we will sell you another machine some day, or Mr. Elmire and I will come down and bum another shore dinner the next time we are in Jersey, and we'll stick Elmire for the smokes.)

Yours truly,

KEYSTONE DRILLER COMPANY.

RRD:FB (Signed) REX DOWNIE."

This testimony and the Keystone Driller Company's letter written as late as November 23, 1928, introduced in evidence as Defendant's Exhibit No. 38, apparently throws a different light on this situation from that shown in the quoted portion of the Downie affidavit and the Plaintiff's Brief quoted above. From the Clutter testimony above quoted and the portion of Defendant's Exhibit No. 40, Keystone Driller Company's letter, it is apparent that they did not defy Clutter and that the machines were not repossessed from Clutter until they had agreed to give him a cash credit as a substitute for the machine credit which they had previously granted him.

In the Second Brief of Plaintiff on this Motion, great reliance is placed upon the decision in the Cleveland case against the Byers Company by Judge Jones and which was sustained by the Court of Appeals. In Plaintiff's First Brief on this Motion, page 2, we read as follows:

"We do not deny that Clutter and Wallower devised a certain machine and used it in the early part of 1920."

Mr. Rex Downie in his affidavit filed herein on this Motion, dated December 30, 1930, stated that the mat-

ter of the Clutter and Wallower development at Joplin, Missouri, had been submitted to F. O. Richey, of Richey & Watts. This testimony shows that Clutter and Wallower used skimmer scoops, and attached them rigidly to an instroke ditching machine in the early part of 1920, and it appears from the affidavits of Downie and the brief filed by Counsel for Plaintiff herein that the evidence of this development by Clutter and Wallower was submitted to Counsel for Plaintiff and was passed upon by them, and yet in presenting their case before the District Court at Cleveland in the Byers suit we read on page 32, of the brief filed by Plaintiff the following:

> "On the other hand there were perhaps a thousand skilled mechanics working daily with the five or six hundred Clutter machines used. All these mechanics experienced the inconveniences of the shortcomings of the Clutter machine, also were familiar with the drop ends or bottoms in the steam shovels and skimmers which were often working on the same job with the Clutter ditcher. All were familiar with the advantages of dumping through an openable part of the scoop, many had operated shovels and skimmers in that way, *yet not one of these mechanics saw how to apply the drop part principle to the Clutter machine* * * *." (Italics ours.)

This statement was also incorporated in Plaintiff's Brief on Appeal in the Byers suit before the U. S. Court of Appeals of the Sixth Circuit on page 45.

On page 30 of the Brief filed by the Plaintiff in the District Court in the Byers suit in Cleveland and on page 43 of the Plaintiff's Brief on Appeal the following statement is made:

> "If new results are the test of invention, it is present here. Nobody before Downie had conceived how a dump bottom could be mounted and operated in an inward arc machine or otherwise had seen how the bottom could be closed or operated to dislodge the sticking spoil or to root in the trench. Nobody had been able to do that before."

In the Cleveland suit there were 154 pages of testimony given by Robert Rex Downie. The only other witness to testify at any length at the open trial was an expert by the name of Sessions. He gave 77 pages of typewritten testimony. It will therefore be seen that

the case in the Cleveland Court was presented and rested almost entirely upon the testimony of Robert Rex Downie.

JOHN J. MAHONEY.

Sworn to before me and subscribed in my presence this 1st day of January, 1931.

JESSIE L. JORDAN,

(Seal) *Notary Public, Franklin County, Ohio.*

My commission expires February 14th, 1933.

"EXHIBIT A."

November 4, 1930.

Messrs. Richey & Watts,
1090 Union Trust Building,
Cleveland, Ohio

(Attention: Mr. A. H. Edgerton)

Gentlemen:

During the taking of the Bernard R. Clutter deposition at Lakewood, N. J., October 21 to 23, Mr. Edgerton agreed to furnish us at once photostatic copies of various papers marked for identification as plaintiff's exhibits A to I inclusive.

To date, these papers have not yet been received and we would appreciate it very much if you would see that we are furnished these photostatic copies as soon as possible in view of the fact that our time for taking depositions is now running.

Yours very truly,

JJM:ME CORBETT & MAHONEY.

Copy to—Mr. Edward L. Reed, Reibold Building, Dayton, Ohio.

NOTICE UNDER REVISED STATUTES OF UNITED STATES, SECTION NO. 4920.

(Filed Feb. 3, 1931.)

[Case No. 965]

Messrs. Richey & Watts,
1090 Union Trust Building,
Cleveland, Ohio,
Attorneys for Plaintiff.

Please take notice in accordance with Section 4920 of the United States Revised Statutes, that at the trial of this case the defendant, in addition to the patents, printed publications, instances of public use or sale, prior knowledge, prior use or prior invention set up in its Answer herein, will also show:

1. That LeRoy P. Clutter was not the original and first inventor or discoverer of the invention alleged to be described and claimed in the said Letters Patent No. 1,317,431, or of any material or substantial part thereof, but that the same and all material or substantial parts thereof had been patented or described in patents filed prior to the date of the alleged invention of the said LeRoy P. Clutter; and that said patent is void and invalid because the alleged invention has been patented or described in printed publications prior to said Clutter's supposed invention or discovery thereof, or more than two years prior to his application for a patent therefor, as follows:

UNITED STATES PATENTS.

Patentee	*Number*	*Issued*
A. N. Cross,	418,311,	Dec. 31, 1889
A. N. Cross,	808,345,	Dec. 26, 1905
J. J. Benedick,	876,517,	Jan. 14, 1908
J. C. Boehm,	999,953,	Aug. 8, 1911
Geo. W. King,	579,589,	Mar. 30, 1897

FOREIGN PATENTS.

Great Britain,	H. Jubb,	No. 11,496, of 1903
Great Britain,	T. Whitaker,	No. 9,893, of 1899

PUBLICATIONS.

Pages 102, 103, 104, 130, 131, 132, 133, 157, 158, 159, 160 and 161, of "Excavating Machinery," by Allen Boyer McDaniel, Published 1913 by McGraw-Hill Book Company, Inc., 239 West 39th Street, New York, N. Y.

2. That the alleged invention and improvement described and claimed in said Letters Patent No. 1,317,431, and all substantial and material parts thereof were publicly known to and used by the following persons at the places indicated prior to any invention thereof by the said LeRoy P. Clutter, and more than two years prior to the filing of an application for said Letters Patent, as follows:

"Daniel H. Mahoney Machine" manufactured by Daniel H. Mahoney, of North Bend, Ohio, and used at Vincennes, Indiana, and vicinity, at Gorham, Illinois, at Knox County, Indiana, near West Phalia, Indiana, Edwardsport, Indiana, and elsewhere, as shown by the depositions of Daniel H. Mahoney, L. B. Reed, Frank J. Kapps, Frank A. Lang, Winn H. Reed, Robert E. Lind, William Stein, D. H. Bond, John W. Lenahan, Lyman Barekman, Ernest H. Vollmer, Thomas G. Dunn, Joseph Moschenrose, William Bradshaw, Henry Stone, George Stone, George DeRemo, Joseph Glenn, C. Crain, Eugene W. Johnson, taken and filed in this case.

A "Back Action" excavator which was manufactured and sold by The Vulcan Iron Works Company, at Toledo, Ohio, and which was publicly used by the Gillespie Company, of Pittsburgh, Pennsylvania, at Allegheny, Pennsylvania, Passaic, New Jersey, Ponton Plains, New Jersey, Minneapolis, Minnesota, by Anderson Bros. at St. Louis, Missouri, Farley & Green, at Chicago, and elsewhere in the United States, as shown by the depositions of John W. Webber and Walter S. Culver, taken and filed herein.

A Fairbanks Excavator manufactured and sold by The Fairbanks Steam Shovel Company, of Marion, Ohio, and publicly used by George A. Castle, at Crookeston, Minnesota, and by the San Benito Land & Water Company or Rio Grande Construction Company, at San Benito, Texas, as shown by the deposition of William Mitchell, taken and filed herein.

A "Back Action" shovel manufactured and sold by the Marion Steam Shovel Company, of Marion, Ohio, and which was publicly used by the Charleston South Carolina Mining & Manufacturing Company, near Charleston, South Carolina, and at Bartow, Florida, as shown by the deposition of Frank H. King, taken and filed herein.

By a similar machine manufactured by the Marion Steam Shovel Company, Marion, Ohio, and sold, more than two years prior to filing of the said LeRoy P. Clutter patent, to the following Companies:

Charleston, South Carolina Mining and Manufacturing Company, at Charleston, South Carolina.

Dunnellon Phosphate Company, Dunnellon, Florida.

Bartow Phosphate Company, Bartow, Florida.

A. N. Cross, of Tomah, Wisconsin, in Minnesota, Iowa and Nebraska.

3. That Robert Rex Downie was not the first inventor or discoverer of the invention alleged to be described and claimed in said Letters Patent No. 1,511,114, or any material or substantial part thereof, but that the same and all material or substantial parts thereof had been patented or described in patents filed prior to the date of the alleged invention of the said Robert Rex Downie; and that said patent is void and invalid because the alleged invention has been patented or described in printed publications prior to said Clutter's supposed invention or discovery thereof, or more than two years prior to his application for a patent therefor, as follows:

UNITED STATES PATENTS:

Patentee	*Number*	*Issued*
P. Howard,	674,417,	May 21, 1901
F. E. Kersey,	881,695,	Mar. 10, 1908
A. W. Robinson,	1,047,991,	Dec. 24, 1912
L. P. Clutter,	1,107,899,	Aug. 18, 1914
G. E. Wagner, et al.,	1,476,121,	Dec. 4, 1923

FOREIGN PATENTS.

Great Britain,	T. Whitaker,	No. 9,893, of 1899
Great Britain,	H. Jubb,	No. 11,496, of 1903
Great Britain,	P. W. D'Alton,	No. 655, of 1882

PUBLICATIONS.

Catalogue, Copyrighted 1909 by American Hoist & Derrick Company, of St. Paul, Minnesota.

4. That the alleged invention and improvement described and claimed in said Letters Patent No. 1,511,114, and all material and substantial parts thereof were publicly known to and used by the following persons at

the places indicated prior to any invention thereof by the said Robert Rex Downie, and more than two years prior to the filing of an application for Letters Patent, as follows:

"Daniel H. Mahoney Machine" manufactured by Daniel H. Mahoney, of North Bend, Ohio, and used at Vincennes, Indiana, and vicinity, at Gorham, Illinois, at Knox County, Indiana, near West Phalia, Indiana, Edwardsport, Indiana, and elsewhere, as shown by the depositions of Daniel H. Mahoney, L. B. Reed, Frank J. Kapps, Frank A. Lang, Winn H. Reed, Robert E. Lind, William Stein, D. H. Bond, John W. Lenahan, Lyman Barekman, Ernest H. Vollmer, Thomas G. Dunn, Joseph Moschenrose, William Bradshaw, Henry Stone, George Stone, George DeRemo, Joseph Glenn, C. Crain, Eugene W. Johnson, taken and filed in this case.

A "Back Action" excavator which was manufactured and sold by The Vulcan Iron Works Company, at Toledo, Ohio, and which was publicly used by the Gillespie Company, of Pittsburgh, Pennsylvania, at Allegheny, Pennsylvania, Passaic, New Jersey, Ponton Plains, New Jersey, Minneapolis, Minnesota, by Anderson Bros., at St. Louis, Missouri, Farley & Green, at Chicago, and elsewhere in the United States, as shown by the depositions of John W. Webber and Walter S. Culver, taken and filed herein.

A Fairbanks Excavator manufactured and sold by The Fairbanks Steam Shovel Company, of Marion, Ohio, and publicly used by George A. Castle, at Crookeston, Minnesota, and by the San Benito Land & Water Company, or Rio Grande Construction Company, at San Benito, Texas, as shown by the deposition of William Mitchell, taken and filed herein.

A "Back Action" shovel manufactured and sold by the Marion Steam Shovel Company, of Marion, Ohio, and which was publicly used by the Charleston South Carolina Mining & Manufacturing Company, near Charleston, South Carolina, and at Bartow, Florida, as shown by the deposition of Frank H. King, taken and filed herein.

By a similar machine manufactured by the Marion Steam Shovel Company, of Marion, Ohio, and sold, more than two years prior to the filing of the said Robert Rex Downie patent to the following Companies:

Charleston, South Carolina Mining & Manufacturing Company, at Charleston, South Carolina.

Dunnellon Phosphate Company, Dunnellon, Florida.

Bartow Phosphate Company, Bartow, Florida.

A. N. Cross, of Tomah, Wisconsin, in Minnesota, Iowa and Nebraska.

Back Action drop-bottom excavator, designed and publicly used by Bernard R. Clutter and Herbert H. Wallower, at Joplin, Missouri, in the winter of 1919 and 1920, as shown by the depositions of Bernard R. Clutter, Phil Culbertson, W. L. Culbertson, John Cummings, M. A. Elsner, Lysle L. Hazen, Herbert H. Wallower, Frederick H. Ransom, taken and filed herein.

5. That the alleged invention and improvement described and claimed in said Letters Patent, No. 1,543,250, and all material and substantial parts thereof were publicly known to and used by the following persons at the places indicated prior to any invention thereof by the said Robert Rex Downie, and more than two years prior to the filing of an application for Letters Patent, as follows:

"Daniel H. Mahoney Machine" manufactured by Daniel H. Mahoney, of North Bend, Ohio, and used at Vincennes, Indiana, and vicinity, at Gorham, Illinois, at Knox County, Indiana, near West Phalia, Indiana, Edwardsport, Indiana, and elsewhere, as shown by the depositions of Daniel H. Mahoney, L. B. Reed, Frank J. Kapps, Frank A. Lang, Winn H. Reed, Robert E. Lind, William Stein, D. H. Bond, John W. Lenahan, Lyman Barekman, Ernest H. Vollmer, Thomas G. Dunn, Joseph Moschenrose, William Bradshaw, Henry Stone, George Stone, George DeRemo, Joseph Glenn, C. Crain, Eugene W. Johnson, taken and filed in this case.

A "Back Action" excavator which was manufactured and sold by The Vulcan Iron Works Company, at Toledo, Ohio, and which was publicly used by the Gillespie Company, of Pittsburgh, Pennsylvania, at Allegheny, Pennsylvania, Passaic, New Jersey, Ponton Plains, New Jersey, Minneapolis, Minnesota, by Anderson Bros., at St. Louis, Missouri, Farley & Green, at Chicago, and elsewhere in the United States, as shown by the depositions of John W. Webber and Walter S. Culver, taken and filed herein.

A Fairbanks Excavator manufactured and sold by the Fairbanks Steam Shovel Company, of Marion, Ohio, and publicly used by George A. Castle, at Crookeston, Minnesota, and by the San Benito Land & Water Company, or Rio Grande Construction Company, at San Benito, Texas, as shown by the deposition of William Mitchell, taken and filed therein.

A "Back Action" shovel manufactured and sold by the Marion Steam Shovel Company, at Marion, Ohio, and which was publicly used by the Charleston South Carolina Mining & Manufacturing Company, near Charleston, South Carolina, and at Bartow, Florida, as shown by the deposition of Frank H. King, taken and filed herein.

By a similar machine manufactured by the Marion Steam Shovel Company, of Marion, Ohio, and sold more than two years prior to the filing of the said Robert Rex Downie patent to the following Companies:

Charleston South Carolina Mining & Manufacturing Company, at Charleston, South Carolina.

Dunnellon Phosphate Company, Dunnellon, Florida.

Bartow Phosphate Company, Bartow, Florida.

A. N. Cross, of Tomah, Wisconsin, in Minnesota, Iowa and Nebraska.

Back Action drop-bottom excavator designed by Bernard R. Clutter and publicly used by him and Herbert H. Wallower, at Joplin, Missouri, in the winter of 1919 and 1920, as shown by the depositions of Bernard R. Clutter, Phil Culbertson, W. L. Culbertson, John Cummings, M. A. Elsner, Lysle L. Hazen, Herbert H. Wallower and Frederick H. Ransom, taken and filed herein.

LeRoy P. Clutter machine, manufactured and sold by Keystone Driller Company, more than two years prior to the filing of Robert Rex Downie patent No. 1,543,250, as shown by the depositions of George E. Wagner and of Bernard R. Clutter, taken and filed herein.

6. That the alleged invention and improvement described and claimed in said Letters Patent No. 1,716,432, and all material and substantial parts thereof were publicly known to and used by the following persons at the places indicated prior to any invention thereof by the said Robert Rex Downie, and more than two years prior to the filing of an application for Letters Patent, as follows:

PUBLIC USE.

Excavating Machines and Scoops manufactured and sold by Industrial Brown Hoist Company and The Brown Hoisting Machinery Company, of Cleveland, Ohio, more than two years prior to the filing of the said Robert Rex Downie patent No. 1,716,432, as shown by the depositions of William C. Bolgiano, J. M. Rice and George Fay, taken and filed herein.

7. That Robert Rex Downie was not the first inventor or discoverer of the invention alleged to be described and claimed in said Letters Patent No. 1,716,432, or any material or substantial part thereof, but that the same and all material or substantial parts thereof had been patented or described in patents filed prior to the date of the alleged invention of the said Robert Rex Downie; and that said patent is void and invalid because the alleged invention has been patented or described in printed publications prior to said Downie's supposed invention or discovery, or more than two years prior to his application for a patent therefor, as follows:

PUBLICATION.

Page 256, "Excavating Machinery," by A. B. McDaniel, published 1913 by McGraw-Hill Book Company, Inc., 239 West 39th Street, New York, N. Y.

8. That Robert Rex Downie was not the first inventor or discoverer of the invention alleged to be described and claimed in said Letters Patent No. 1,709,466, or any material or substantial part thereof, but that the same and all material or substantial parts thereof had been patented or described in patents filed prior to the date of the alleged invention of the said Robert Rex Downie; and that said patent is void and invalid because the alleged invention has been patented or described in printed publications prior to said Downie's supposed invention or discovery, or more than two years prior to his application for a patent therefor, as follows:

PUBLICATIONS.

Catalogue Copyrighted 1909 by American Hoist & Derrick Company, of St. Paul, Minnesota.

Engineering News and Contracting Magazine, dated October, 1924.

9. That the alleged invention and improvement described and claimed in said Letters Patent No. 1,709,466, and all material and substantial parts thereof were publicly known to and used by the following persons at the places indicated prior to any invention thereof by the said Robert Rex Downie, and more than two years prior to the filing of an application for Letters Patent, as follows:

> A Thew Automatic Shovel was manufactured and sold by The Thew Automatic Shovel Company, of Lorain, Ohio, and publicly used in the vicinity of Columbus, Ohio, by the Northwest Boulevard Company, more than two years prior to the filing of the said Downie patent No. 1,709,466, as shown by the depositions of W. E. Lawrence, Ben S. Thompson, Clarence Yardley, taken and filed herein.

Very truly yours,

EDWIN P. CORBETT,

Dated: January 30, 1931. *Attorney for Defendant.*

Service of a copy of the above-entitled Notice is hereby acknowledged this 31st day of January, 1931.

RICHEY & WATTS,

Attorneys for Plaintiff.

ORDER DISMISSING DEFENDANT'S MOTION TO COMPEL PRODUCTION AND INSPECTION OF DOCUMENTS.

(Entered Feb. 2, 1931, by Geo. P. Hahn, Judge.)

[Case No. 965]

This cause came on to be heard before this honorable Court the 3rd day of January, 1931, upon Defendant's motion to compel production and inspection of documents dated December 15, 1930, and the Court having considered the same upon the briefs and arguments of counsel for the parties.

It is hereby ordered, adjudged and decreed that the Defendant's motion to compel production and inspection of documents be dismissed without prejudice and the same is hereby dismissed without prejudice.

GEO. P. HAHN, *District Judge.*

Approved as to form by counsel for Defendants.

GEDDES, SCHMETTAU, WILLIAMS, EVERSMAN & MORGAN.
EDWARD H. REED—FRASER, HIETT, WALL & EFFLER.

Approved as to form by counsel for Plaintiff.

RICHEY & WATTS.

ORDER PERMITTING AMENDMENT TO DEFENDANT'S ANSWER TO BE FILED.

(Entered March 2, 1931, by Geo. P. Hahn, Judge.)

[Case No. 965]

It is hereby ordered that the attached amendments to defendant's answer to the original bill of complaint herein be entered and made a part of the original answer and that said amendments shall have the same force and effect as if they had formed a part of the answer as originally filed.

GEO. P. HAHN, *District Judge.*

We consent to the foregoing order.

Signed at Cleveland, Ohio, this 28th day of February, 1931.

RICHEY & WATTS,
Attorneys for Plaintiff.

Signed at Columbus, Ohio, this 24th day of February, 1931.

CORBETT & MAHONEY,
Attorneys for Defendant.

AMENDMENT TO ANSWER TO ORIGINAL BILL OF COMPLAINT.

(Filed Mar. 2, 1931.)

[Case No. 965]

Now comes the defendant, by its attorneys, with the approval of this Honorable Court, and amends its answer to the original bill of complaint as follows:

In paragraph VII (a) at the end of the list of prior United States Letters Patent enumerated on pages 3 and 4 of the Answer, insert the following list of patents:

UNITED STATES PATENTS

Patentee	*Number*	*Issued*
A. N. Cross,	418,311,	Dec. 31, 1889
A. N. Cross,	808,345,	Dec. 26, 1905
J. J. Benedick,	876,517,	Jan. 14, 1908
J. C. Boehm,	999,953,	Aug. 8, 1911
Geo. W. King,	579,589,	Mar. 30, 1897

At the end of the list of foreign patents at the end of paragraph VII (a) on page 4, insert the following foreign patents:

FOREIGN PATENTS

Great Britain,	H. Jubb,	No. 11,496, of 1903
Great Britain,	T. Whitaker,	No. 9,893, of 1899

At the end of the list of publications of paragraph VII (a), insert the following publication:

PUBLICATION

Pages 102, 103, 104, 130, 131, 132, 133, 157, 158, 159, 160 and 161, of "Excavating Machinery," by Allen Boyer McDaniel, Published 1913 by McGraw-Hill Book Company, Inc., 239 West 39th Street, New York, N. Y.

In paragraph VIII of said Answer, at the end of the prior uses listed on page 6, insert the following:

"Daniel H. Mahoney Machine" manufactured by Daniel H. Mahoney, of North Bend, Ohio, and used at Vincennes, Indiana, and vicinity, at Gorham, Illinois, at Knox County, Indiana, near West Phalia, Indiana, Edwardsport, Indiana, and elsewhere, as shown by the depositions of Daniel H. Mahoney, L. B. Reed, Frank J.

Kapps, Frank A. Lang, Winn H. Reed, Robert E. Lind, William Stein, D. H. Bond, John W. Lenahan, Lyman Barekman, Ernest H. Vollmer, Thomas G. Dunn, Joseph Moschenrose, William Bradshaw, Henry Stone, George Stone, George DeRemo, Joseph Glenn, C. Crain, Eugene W. Johnson, taken and filed in this case.

A "Back Action" excavator which was manufactured and sold by The Vulcan Iron Works Company, at Toledo, Ohio, and which was publicly used by the Gillespie Company, of Pittsburgh, Pennsylvania, at Allegheny, Pennsylvania, Passaic, New Jersey, Ponton Plains, New Jersey, Minneapolis, Minnesota, by Anderson Bros. at St. Louis, Missouri, Farley & Green, at Chicago, and elsewhere in the United States, as shown by the depositions of John W. Webber and Walter S. Culver, taken and filed herein.

A Fairbanks Excavator manufactured and sold by The Fairbanks Steam Shovel Company, of Marion, Ohio, and publicly used by George A. Castle, at Crookeston, Minnesota, and by the San Benito Land & Water Company or Rio Grande Construction Company, at San Benito, Texas, as shown by the deposition of William Mitchell, taken and filed herein.

A "Back Action" shovel manufactured and sold by the Marion Steam Shovel Company, of Marion, Ohio, and which was publicly used by the Charleston South Carolina Mining & Manufacturing Company, near Charleston, South Carolina, and at Bartow, Florida, as shown by the deposition of Frank H. King, taken and filed herein.

By a similar machine manufactured by the Marion Steam Shovel Company, Marion, Ohio, and sold, more than two years prior to filing of the said LeRoy P. Clutter patent, to the following Companies:

Charleston, South Carolina Mining and Manufacturing Company, at Charleston, South Carolina.

Dunnellon Phosphate Company, Dunnellon, Florida.

Bartow Phosphate Company, Bartow, Florida.

A. N. Cross, of Tomah, Wisconsin, in Minnesota, Iowa and Nebraska.

In paragraph XII (a) of said Answer, at the end of the list of United States prior patents listed on page 8 thereof, insert the following:

UNITED STATES PATENTS

Patentee	*Number*	*Issued*
P. Howard,	674,417,	May 21, 1901
F. E. Kersey,	881,695,	Mar. 10, 1908
A. W. Robinson,	1,047,991,	Dec. 24, 1912
L. P. Clutter,	1,107,899,	Aug. 18, 1914
G. E. Wagner, et al.,	1,476,121,	Dec. 4, 1923

In the same paragraph at the end of the foreign patents listed on page 8, insert the following:

FOREIGN PATENTS

Great Britain,	T. Whitaker,	No. 9,893, of 1899
Great Britain,	H. Jubb,	No. 11,496, of 1903
Great Britain,	P. W. D'Alton,	No. 655, of 1882

In the same paragraph at the end of the list of publications on page 8, insert the following:

Catalogue, Copyrighted 1909 by American Hoist & Derrick Company, of St. Paul, Minnesota.

In paragraph XIII of said Answer, at the end of the list of prior uses on page 10, insert the following:

"Daniel H. Mahoney Machine" manufactured by Daniel H. Mahoney, of North Bend, Ohio, and used at Vincennes, Indiana, and vicinity, at Gorham, Illinois, at Knox County, Indiana, near West Phalia, Indiana, Edwardsport, Indiana, and elsewhere, as shown by the depositions of Daniel H. Mahoney, L. B. Reed, Frank J. Kapps, Frank A. Lang, Winn H. Reed, Robert E. Lind, William Stein, D. H. Bond, John W. Lenahan, Lyman Barekman, Ernest H. Vollmer, Thomas G. Dunn, Joseph Moschenrose, William Bradshaw, Henry Stone, George Stone, George DeRemo, Joseph Glenn, C. Crain, Eugene W. Johnson, taken and filed in this case.

A "Back Action" excavator which was manufactured and sold by The Vulcan Iron Works Company, at Toledo, Ohio, and which was publicly used by the Gillespie Company, of Pittsburgh, Pennsylvania, at Allegheny, Pennsylvania, Passaic, New Jersey, Ponton Plains, New Jersey, Minneapolis, Minnesota, by Anderson Bros., at St. Louis, Missouri, Farley & Green, at Chicago, and elsewhere in the United States, as shown by the depositions of John W. Webber and Walter S. Culver, taken and filed herein.

A Fairbanks Excavator manufactured and sold by The Fairbanks Steam Shovel Company, of Marion, Ohio, and publicly used by George A. Castle, at Crookeston,

Minnesota, and by the San Benito Land & Water Company, or Rio Grande Construction Company, at San Benito, Texas, as shown by the deposition of William Mitchell, taken and filed herein.

A "Back Action" shovel manufactured and sold by the Marion Steam Shovel Company, of Marion, Ohio, and which was publicly used by the Charleston South Carolina Mining & Manufacturing Company, near Charleston, South Carolina, and at Bartow, Florida, as shown by the deposition of Frank H. King, taken and filed herein.

By a similar machine manufactured by the Marion Steam Shovel Company, of Marion, Ohio, and sold, more than two years prior to the filing of the said Robert Rex Downie patent to the following Companies:

Charleston, South Carolina Mining & Manufacturing Company, at Charleston, South Carolina.

Dunnellon Phosphate Company, Dunnellon, Florida.

Bartow Phosphate Company, Bartow, Florida.

A. N. Cross, of Tomah, Wisconsin, in Minnesota, Iowa and Nebraska.

Back Action drop-bottom excavator, designed and publicly used by Bernard R. Clutter and Herbert H. Wallower, at Joplin, Missouri, in the winter of 1919 and 1920, as shown by the depositions of Bernard R. Clutter, Phil Culbertson, W. L. Culbertson, John Cummings, M. A. Elsner, Lysle L. Hazen, Herbert H. Wallower, Frederick H. Ransom, taken and filed herein.

In paragraph XIX of said Answer, at the end of prior uses on page 13, insert the following:

"Daniel H. Mahoney Machine" manufactured by Daniel H. Mahoney, of North Bend, Ohio, and used at Vincennes, Indiana, and vicinity, at Gorham, Illinois, at Knox County, Indiana, near West Phalia, Indiana, Edwardsport, Indiana, and elsewhere, as shown by the depositions of Daniel H. Mahoney, L. B. Reed, Frank J. Kapps, Frank A. Lang, Winn H. Reed, Robert E. Lind, William Stein, D. H. Bond, John W. Lenahan, Lyman Barekman, Ernest H. Vollmer, Thomas G. Dunn, Joseph Moschenrose, William Bradshaw, Henry Stone, George Stone, George DeRemo, Joseph Glenn, C. Crain, Eugene W. Johnson, taken and filed in this case.

A "Back Action" excavator which was manufactured and sold by The Vulcan Iron Works Company, at

Toledo, Ohio, and which was publicly used by the Gillespie Company, of Pittsburgh, Pennsylvania, at Allegheny, Pennsylvania, Passaic, New Jersey, Ponton Plains, New Jersey, Minneapolis, Minnesota, by Anderson Bros., at St. Louis, Missouri, Farley & Green, at Chicago, and elsewhere in the United States, as shown by the depositions of John W. Webber and Walter S. Culver, taken and filed herein.

A Fairbanks excavator manufactured and sold by the Fairbanks Steam Shovel Company, of Marion, Ohio, and publicly used by George A. Castle, at Crookeston, Minnesota, and by the San Benito Land & Water Company, or Rio Grande Construction Company, at San Benito, Texas, as shown by the deposition of William Mitchell, taken and filed therein.

A "Back Action" shovel manufactured and sold by the Marion Steam Shovel Company, at Marion, Ohio, and which was publicly used by the Charleston South Carolina Mining & Manufacturing Company, near Charleston, South Carolina, and at Bartow, Florida, as shown by the deposition of Frank H. King, taken and filed herein.

By a similar machine manufactured by the Marion Steam Shovel Company, of Marion, Ohio, and sold more than two years prior to the filing of the said Robert Rex Downie patent to the following Companies:

Charleston South Carolina Mining & Manufacturing Company, at Charleston, South Carolina.

Dunnellon Phosphate Company, Dunnellon, Florida.

A. N. Cross, of Tomah, Wisconsin, in Minnesota, Iowa and Nebraska.

Back Action drop-bottom excavator designed by Bernard R. Clutter and publicly used by him and Herbert H. Wallower, at Joplin, Missouri, in the winter of 1919 and 1920, as shown by the depositions of Bernard R. Clutter, Phil Culbertson, W. L. Culbertson, John Cummings, M. A. Elsner, Lysle L. Hazen, Herbert H. Wallower and Frederick H. Ransom, taken and filed herein.

LeRoy P. Clutter machine, manufactured and sold by Keystone Driller Company, more than two years prior to the filing of Robert Rex Downie patent No. 1,543,250, as shown by the depositions of George E. Wagner and of Bernard R. Clutter, taken and filed herein.

THE OSGOOD COMPANY,
By CORBETT & MAHONEY,
Attorneys.

ORDER PERMITTING AMENDMENT TO BE MADE TO DEFENDANT'S ANSWER TO SUPPLEMENTAL BILL OF COMPLAINT.

(Entered March 2, 1931, by Geo. P. Hahn, Judge.)

[Case No. 965]

It is hereby ordered that the attached amendments to defendant's answer to the supplemental bill of complaint herein be entered and made a part of the original answer to the supplemental bill of complaint and that said amendments shall have the same force and effect as if they had formed a part of the answer to the supplemental bill of complaint as originally filed.

GEO. P. HAHN,
District Judge.

We consent to the foregoing order.

Signed at Cleveland, Ohio, this 28 day of February, 1931.

RICHEY & WATTS,
Attorneys for Plaintiff.

Signed at Columbus, Ohio, this 24 day of February, 1931.

CORBETT & MAHONEY,
Attorneys for Defendant.

AMENDMENT TO ANSWER TO SUPPLEMENTAL BILL OF COMPLAINT.

(Filed Mar. 2, 1931.)

[Case No. 965]

In Paragraph VII (a) of said Answer to the supplemental bill of complaint, at the end of the list of prior patents on page 4 thereof, insert the following publications:

PUBLICATIONS

Catalogue Copyrighted 1909 by American Hoist & Derrick Company, of St. Paul, Minnesota.

Engineering News and Contracting Magazine, dated October, 1924.

In paragraph VIII of said Answer to the supplemental bill of complaint, at the end of the prior uses on page 6 thereof, insert the following:

A Thew Automatic Shovel was manufactured and sold by The Thew Automatic Shovel Company, of Lorain, Ohio, and publicly used in the vicinity of Columbus, Ohio, by the Northwest Boulevard Company, more than two years prior to the filing of the said Downie patent No. 1,709,466, as shown by the depositions of W. E. Lawrence, Ben S. Thompson, Clarence Yardley, taken and filed herein.

In paragraph XII (a) of said Answer to the supplemental bill of complaint, at the end of the list of prior patents listed on page 8, insert the following:

PUBLICATION

Page 256, "Excavating Machinery," by A. B. McDaniel, published 1913 by McGraw-Hill Book Company, Inc., 239 West 39th Street, New York, N. Y.

In paragraph XIII of said Answer to supplemental bill of complaint, after line 8 thereof on page 9, insert the following:

PUBLIC USE

Excavating Machines and Scoops manufactured and sold by Industrial Brown Hoist Company and The Brown Hoisting Machinery Company, of Cleveland, Ohio, more than two years prior to the filing of the said Robert Rex Downie patent No. 1,716,432, as shown by the depositions of William C. Bolgiano, J. M. Rice and George Fay, taken and filed herein.

THE OSGOOD COMPANY,

By CORBETT & MAHONEY,
Attorneys.

ORDER CONSOLIDATING CAUSE NUMBER 965 WITH CAUSE NUMBER 964 FOR THE PURPOSE OF TRIAL.

(Entered Mar. 3, 1931, by George P. Hahn, Judge.)

[Case No. 965]

It is hereby ordered that the above entitled suit shall be tried and heard by this court together with the suit of Keystone Driller Company, Plaintiff vs. The Osgood Company, Defendant, Equity No. 965; that testimony taken at the hearing by the plaintiff or either of the Defendants be used in each case with the same force and effect as though the witnesses were examined separately in each of said cases, provided however that, at the trial, the witnesses may be examined or cross-examined by the Attorney for either defendant on behalf of the other defendant; or the Attorney for each defendant may examine and cross-examine the witnesses separately if they so desire; that objections and exceptions made by counsel in either case apply with equal force and effect in both cases; that any and all exhibits introduced in evidence by any of the parties hereto and/or any test or inspection or examination of any machine or apparatus proffered at hearing by any party hereto be considered by the Court with the same force and effect in both cases (insofar as they may apply to both cases) as though such exhibit were introduced, and such test, inspection or examination were made separately in each of said cases; that if the Court desires arguments and/or briefs after the trial the former be made and the latter filed in the two cases together, but the defendants to have the right to file separate briefs. Plaintiff waives its objection heretofore made to the taking in both cases together of the depositions hitherto taken; that a separate copy of any and all paper exhibits shall be filed in each case, provided that when the original of any of said exhibits is filed in one case, a photographic or other copy of said original exhibit may be filed in the other case subject to comparison with the original and correction if any error or discrepancy be found; that the Plaintiff provide each of the Defendants with a copy of its record and that separate records shall be made and filed in each case, and that separate decrees be entered in each case; and that nothing herein shall deprive the parties to said suits of any material rights or defenses to which they would be entitled if these cases were tried separately.

O.K. Edward L. Reed, *Counsel for Defendant.*

Richey & Watts, *Counsel for Plaintiff.*

STIPULATION RE DEPOSITIONS OF JOHN B. WEBBER, WALTER S. CULVER AND FRANK H. KING.

(Filed March 3, 1931.)

[Case No. 965]

It is hereby stipulated by and between the parties hereto that the depositions of John B. Webber, Walter S. Culver of Toledo, Ohio, and Frank H. King of Marion, Ohio, taken on behalf of the defendant herein and any and all exhibits offered in evidence in connection with said depositions may be offered and received in evidence in the above-entitled case under U. S. Revised Statutes, Sections 863, 864 and 865, with the same force and effect as though the said witnesses were at the time of trial herein residing more than one hundred (100) miles from the place of trial thereof.

RICHEY & WATTS,

Dated March 3, 1931. *Counsel for Plaintiff.*

CORBETT & MAHONEY,

Dated March .., 1931. *Counsel for Defendant.*

STIPULATION RE DEPOSITION OF WILLIAM MITCHELL.

(Filed Mar. 4, 1931.)

[Case No. 965]

It is hereby stipulated by and between the parties hereto that the deposition of William Mitchell of Marion, Ohio, taken on behalf of the defendant herein and any and all exhibits offered in evidence in connection with said deposition may be offered and received in evidence in the above-entitled case under U. S. Revised Statutes, Sections 863, 864 and 865, with the same force and effect as though the said witness was at the time of trial herein residing more than one hundred (100) miles from the place of trial thereof.

RICHEY & WATTS,

Dated March 4, 1931. *Counsel for Plaintiff.*

CORBETT & MAHONEY,

Dated March 4, 1931. *Counsel for Defendant.*

ORDER PERMITTING TAKING OF DEPOSITIONS AT SOUTH MILWAUKEE, WISCONSIN.

(Entered April 17, 1931, by Geo. P. Hahn, Judge.)

[Case No. 965]

Upon motion of the defendant for an order permitting it to take the depositions of the following persons for use at the trial of the above entitled case, to-wit:

William Bager,	South Milwaukee, Wisconsin
Werner Lehman,	South Milwaukee, Wisconsin
H. O. Jacobson,	South Milwaukee, Wisconsin
D. P. Eells,	South Milwaukee, Wisconsin
C. A. Kelly,	South Milwaukee, Wisconsin
Andrew Vahldieck,	South Milwaukee, Wisconsin
N. A. McGrath,	South Milwaukee, Wisconsin
Noel S. Hayward,	South Milwaukee, Wisconsin
J. H. Imse,	South Milwaukee, Wisconsin
M. T. Smith,	South Milwaukee, Wisconsin

and it appearing to the Court, by affidavit, that the persons above named are beyond the jurisdiction of the Court, living more than one hundred miles from the place of trial herein, and it appearing that the evidence sought to be elicited from such persons is newly discovered and that consequently their depositions could not have been taken before, plaintiff's motion is granted and leave to take said depositions is hereby given.

GEO. P. HAHN, *Judge.*

STIPULATION AS TO THE CORRECTNESS OF THE NARRATIVE STATEMENT OF TESTIMONY.

(Filed Sept. 26, 1931.)

[Case No. 964]

It is hereby stipulated and agreed by and between Counsel for the parties in the above-entitled cause that the annexed Narrative Statement of Testimony as amended by stipulation of Counsel is a true, complete statement of the evidence adduced at the trial of the above cause reduced to narrative form, and that where portions of the testimony herein is set forth in the form of question and answer, it is so set forth that the evidence might be clearly understood, and it is desired by the parties that the exact language of the witnesses be so stated, and the Court is requested to so approve.

RICHEY & WATTS,

September 25, 1931. *Attorneys for Plaintiff.*

EDWARD L. REED,

September 25, 1931. *Attorney for Defendant.*

STIPULATION AS TO THE CORRECTNESS OF THE NARRATIVE STATEMENT OF TESTIMONY.

(Filed Sept. 26, 1931.)

[Case No. 965]

It is hereby stipulated and agreed by and between Counsel for the parties in the above-entitled cause that the annexed Narrative Statement of Testimony as amended by stipulation of Counsel is a true, complete statement of the evidence adduced at the trial of the above cause reduced to narrative form, and that where portions of the testimony herein is set forth in the form of question and answer, it is so set forth that the evidence might be clearly understood, and it is desired by the parties that the exact language of the witnesses be so stated, and the Court is requested to so approve.

RICHEY & WATTS,

September 25, 1931. *Attorneys for Plaintiff.*

CORBETT & MAHONEY,

September 25, 1931. *Attorneys for Defendant.*

ORDER APPROVING NARRATIVE.

(Entered Sept. 26, 1931, by Geo. P. Hahn, Judge.)

[Case No. 964]

The Narrative Statement of Testimony taken at the trial of this cause having been presented to the Court, and being found by the Court to be a true, complete and properly prepared copy,

IT IS THEREFORE ORDERED, that the same be settled and allowed as a true, complete, and correct statement of the evidence introduced in said cause, reduced to narrative form, and that where portions of the testimony herein is set forth in the form of question and answer it is so set forth that the evidence might be clearly understood, and as the parties so desire that the exact language of the witnesses may be so stated, the Court so permits and approves.

GEO. P. HAHN,
United States District Judge.

Dated: September 26, 1931.

PRINTER'S NOTE:

An Order Approving Narrative, exactly similar to the foregoing, was entered by Geo. P. Hahn, Judge, on Sept. 26, 1931, in Case No. 965.

The same has been omitted to avoid duplication.

NARRATIVE STATEMENT OF EVIDENCE UNDER EQUITY RULE 75.

(Filed Sept. 26, 1931.)

[Cases Nos. 964 and 965]

Be it remembered that on the trial of the above-entitled cause, the District Court of the United States, Northern District of Ohio, Western Division, at Toledo, before Honorable George P. Hahn, one of the Judges of said Court, the following proceedings were had:

Trial commenced Tuesday, 10:00 A.M., March 3, 1931.

Appearances: F. O. Richey, Esq. and A. H. Edgerton, Esq. of Messrs. Richey and Watts, Cleveland, Ohio, Charles R. May, Esq. of Beaver Falls, Pa., and Philip E. Siggers, Esq. of Washington, D. C., for Plaintiff. Edwin P. Corbett, Esq. and John J. Mahoney, Esq. of Messrs. Corbett and Mahoney, Columbus, Ohio, and Lloyd T. Williams, Esq. of Messrs. Williams, Eversman and Morgan, Toledo, Ohio, for Defendant, The Osgood Company. Edward L. Reed, Esq. of Dayton, Ohio, for Defendant, The General Excavator Company.

By an Order of Court assented to by the above Plaintiff and Defendants, it was directed that the above-entitled suits should be tried and heard together, and that the evidence offered by the Plaintiff or either of the Defendants be used in each case with the same force and effect as though it had been offered separately in each of said cases.

As to the claims of the patents in suit, Mr. Richey stated that the Plaintiff would rely upon claim 4 of Clutter patent 1,317,431 against both Defendants. He stated that as to the first Downie patent 1,511,114 the Plaintiff would rely on claims 6 to 14 inclusive against both Defendants. As to the second Downie patent 1,543,250 he stated that the Plaintiff would rely on claims 1 to 6, and 9 and 10 against both Defendants. He said as to the third Downie patent 1,709,466 that Plaintiff would rely on claims 1, 2, 8, 10, 11, 12, 13, 15 and 19 against both Defendants. He stated as to the fourth Downie patent 1,716,432 the Plaintiff was only charging infringement against the Defendant, The General Excavator Company, and would rely on claims 1, 14, 16 and 18.

Mr. Richey stated that Title had been stipulated, with the exception that the Osgood Company had re-

fused to stipulate that the Plaintiff owns the right to collect for past infringements of the patents, and so he would put in assignments for that purpose. He stated that there had also been an agreement as to the character of the machines that the Defendants had made and sold, and that they are illustrated in catalogues from which they had made cuts.

Opening statements of the case were thereupon made by Counsel for the respective parties.

(Noon Recess)

(1:30 P. M., same day, hearing resumed)

After the noon recess the opening statements of Counsel were continued, by Mr. Corbett, Mr. Williams, Mr. Reed and Mr. Richey.

PLAINTIFF'S CASE.

Mr. Edgerton: If the Court please, at this time we introduce on behalf of the Plaintiff the following exhibits:

P-1	Clutter patent No. 1,317,431.
P-2	Downie patent No. 1,511,114.
P-3	Downie patent No. 1,543,250.
P-4	Downie patent No. 1,709,466.
P-5	Downie patent No. 1,716,432.
P-6	Stipulation dated February 25, 1931.
P-7	Certified copy of the decree of the Keystone Driller Co. vs. Day & Maddock Co., Equity 3617, Jan. 23, 1931, Cleveland Docket.
P-8	Certified copy of decree of Keystone Driller Co. vs. Thew Shovel. No. 3616—Cleveland, Ohio.
P-9	Keystone Driller Co. vs. Byers Machine Co., certified copy of decree. Equity No. 2084, Cleveland Docket.
P-10	Certified copy of decree Keystone vs. Bay City Shovel Inc. Equity No. 205, Eastern District of Michigan, Northern Division.
P-11	Assignments of patents in suit to Keystone Driller Co.
P-12	Volume 1 of record Byers vs. Keystone. Equity No. 2084.

P-12-1 Volume 2 of record Byers vs. Keystone. Equity No. 2084.

P-12-2 Envelope containing exhibits in Byers Case, Equity No. 2084.

Mr. Corbett: As to some of these exhibits introduced in evidence we would like to preserve any possible objection until we have had a chance to examine them.

The Court: Very well.

Rex R. Downie, a witness called by plaintiff, being first duly sworn, testified as follows:

Direct Examination by Mr. Richey.

My name is Rex R. Downie. I reside at Beaver Falls, Pa. I am the inventor of the devices shown in the four patents in suit. I am an officer of the plaintiff company. I was employed intermittently from 1914 to 1920 by the plaintiff in this case, as mechanic, field man, and continuously from November 1919 to date by plaintiff. At first, as I say, as a mechanic in the shop; later as field mechanic and demonstrator; and then as a draughtsman, inter-mixed with administration work; and since 1921 I have been in charge of the engineering for plaintiff, though not an engineer professionally. I am a college graduate, and secretary and general manager of plaintiff company. Ditching has been our principal line of business for this period of which I speak, since 1914; for the past twelve years my work has been primarily the excavation of trenches. In the course of my duties I have examined very many of these machines during operation, in all parts of the United States east of Denver. Not only plaintiff's machines but a dozen or more makes of others; and all various sizes and types of scoops; various kinds of power; and various kinds of mountings; and I think on nearly all varieties of work that are done.

I testified as an expert in the case of the plaintiff herein versus The Byers Machinery Co., in Cleveland. I have examined the drawings and read the descriptive part of the specifications of the patents in suit and understand the machines illustrated and described in the drawings and in the descriptive part of the specifications.

(The witness using a model of the Clutter machine, and a big drawing of the Clutter patent, thereupon gave

the following explanation of the construction and operation of the Clutter patent.)

The Clutter patent is the first patent in suit, the first in point of time, and in scope. In this patent there is the boom and what is called the stick, ditcher stick; a scoop-carrying member; a scoop pivotally attached at the foot of the stick; a pair of braces pivotally attached at the digging end of the scoop, and carrying at their upper extremity slidably mounted in a guide-way upon the stick the pin, being normally restrained from falling by a releasable latch; a hoisting line for elevating the entire structure; the hoisting line being connected to the head end of the stick by links; and connected also to the boom is a pair of links, No. 7 in the patent. This structure at the head of the stick—

The Court: Which one.

Witness: Has been frequently referred to as the pantagraph structure.

The Court: Which one are you referring to?

Witness: This (indicating).

The Court: You call that the stick.

Witness: This is the stick.

The Court: That is the link up there?

Witness: These are links, and these are links; but a brief term which Judge Westenhaver used for reference to this structure, as distinct from a structure wherein there are no vertical links, but only links connecting the hoisting line to the head of the stick, and only for such purpose of such distinction.

The chief characteristic and utility, or at least the utility which indicates the class of the Clutter machine, is that it stands upon the solid ground in advance of its work and excavates by a digging stroke originating at the extreme outreach and extending in an upwardly-extending arc toward the handling machine; thus calling for and permitting the handling machine located upon the uppermost bounding plane of the material to be excavated. The location of the machine upon the top bounding plane permits the use of the machine for excavating trenches of a width too small to accommodate an entire excavating machine, and thereby distinguished Clutter from certain machines in the art which are referred to as ditchers, but which should not be confounded with Clutter, and which dig by means of a downwardly and upwardly extending arc such as Cross, and others of the type. It thus brought the power of this size and

class of machine to be deliverable upon the material in a trench two feet wide, which was a notable advance.

A characteristic of Clutter which was not promptly accorded its due importance at the time of the coming of Clutter, but which since has acquired definite standing as a principle in earth excavation, is that he attained with but two power members what other machines had required three power members to perform.

The Court: You mean he could not operate with two hands?

Witness: The majority of machines; any of the machines having even a majority of Clutter's functions, were not operable by means of two cables anywhere in the prior art of either the Cleveland suit or this suit. In performing his functions by means of but two cables, the hoisting line 21 of the patent, and the hauling line 23, Clutter brought within that simple, dual power application a great range of functions and utilities; the most remarkable, in some ways, being that to strike a hammer-like blow, something which no one prior to Clutter had done; and which extended the digging ability of his device for his size, power and class into the excavating of matters which, without his hammer blow, required weight and power from twice his weight and power to three times his weight and power.

The blow of which I speak is commonly referred to in briefs and in the record in this case as the gravity blow. It is struck by extending the scoop to such a point that it is aimed downwardly, and quickly releasing the hoisting line in this manner (thrice indicating). The second and sharpening element in the operation to produce the gravity blow is a quick retracting of the hauling line at the instant before the teeth strike the ground,—which I will now illustrate (illustrates repeatedly).

Of course the material so fractured—and the blow was and is used for fracturing material rather than actually shaving it or parting it entirely by tooth knife action—in other words it is a pounding action in its effectiveness for breaking rock—had to be gathered and is gathered by the scoop proper as a concave hoe might be used for handling earth.

Further qualities residing in the structure are that the scoop can be moved in any one of the four primary directions of excavation in the center plane of operation with the two members referred to: upwardly by the hoisting line; downwardly by the release of that line; in-

wardly by the retraction of the hauling line; outwardly by the slacking of the hauling line; or in any combined or derived direction within the four points of movement and at any instant in the digging cycle,—a remarkable advance over such machines as two or more of the Rood patents, and others. This selection vested in the operator permits what is called by the operators "pawing," as alluding to the way in which a horse paws the ground with his hoof. It permits the accurate placing of the scoop over a wagon as for discharge, the scoop being moved in or out after the swing has been effected to accommodate or come to the position required for discharge.

The device has also what we term 180-degree travel, that is, a travel of sufficient angular extent to include vertically downward, horizontal and vertically upward presentations of the scoop. The importance of this will be seen from the need for excavating downwardly both for striking the blow—since gravity can only be used in the vertical—and for sinking an excavation in the new, that is, to get down to the level desired at the bottom plane of excavation; horizontally, for the major duty of dirt moving; and vertically in the terminal stage of the digging stroke. The 180-degree travel also implies another form of discharge, or rather one, a simple or basic form of discharge, that of inversion, a method limited in its utility to work wherein a progressive discharge, that is, the gradual sliding of the material out of the scoop in its progress from mid-reach to full reach, is not objectionable. In other words, to work, as we say, where ground deposit is made, and not in such work as requires the conveyances or the accurate placing of the spoil.

Independent presentation is a quality possessed in this Clutter structure distinguishing from much of the prior devices, that is, that the scoop, having taken its load, having been elevated, swung about, discharged and returning to its work, is restored to a digging position with reference to its other parts before it reaches the ground, and is therefore in no degree dependent upon contact with the work either for applying its power or for the attainment of position of the scoop or any part; therefore, the Clutter scoop returns to the work after discharge ready to strike a gravity blow without first touching the ground for restoration of the parts, and then being elevated, as would be required lacking this quality.

The Clutter device was designed for and did execute expeditiously the excavation of trenches at what we call the single width, that is, trench work wherein each digging passage of the scoop follows exactly the centerline preceding and succeeding digging passages. The scoop in its passage, clearing itself sufficiently, with partial retractions of the scoop could be made in the course of digging as when a root or boulder is struck,—the operation which I have referred to as pawing is executed down in a trench, and even with the relatively weak back-thrusting or retracting force available in this device. It will be understood that the hauling force toward the machine is very powerful; but that the backward force is only equal to a fraction of the digging and hauling power, being derived from the short arm at the head end of the stick.

The Clutter scoop is placeable at a radius from its center of rotation elective with the operator, in distinction from several of the machines that had been in use theretofore, both on an outward and inward arc, as I have said, adjusted to the vehicle, if vehicles were used for the conveyance of spoil. The material is discharged by the action of gravity. This was at once a result and a cause of two-power-line operation.

Many of these things are interwoven in a way difficult to present all of the merits independently, and yet each in its fullness; but if a gravity discharge had not been obtained, a third line would have been required for the discharging of the scoop, since in commercial sizes the weight of the load in this type of machine is considerably beyond that which can be lifted by a workman. Mr. Clutter obtained only a partially or moderately satisfactory control of discharge, that is, ability to control the scoop while discharging into a conveyance.

Regarding power lines I will now explain how they are operated and distinguish between power lines and other kinds of lines that are used. There are other tasks in the operation of a machine than the mere hoisting of the apparatus or the hauling of the scoop toward the machine. First there is what we call swinging, the application of power required to revolve the boom and its supporting structure about some vertical axis, which may be either located at the base of the boom as in the case of this model, and as was the case in plaintiff's commercial machine offered from 1913 to the present time, and still offered as an optional model; or which may be located at the mid-point of a revolving turntable or cab,

as in the type of machine commonly called the whirling or revolving machine.

Another function which is to be performed in a machine, but which does not take artificial power, but for which artificial power may be used, or for which the hand exertion may be used, is that of tripping the bucket, in such work as requires what may be termed spot discharge, that is, a discharge wherein the entire load is to be deposited in a relatively confining area, as distinguished from the progressive discharge, to which I have referred previously, and as required when loading the conveyance.

There are, then, in Clutter two power requirements for effecting all motions of the scoop in the central plane of operation, and as required in the work of making the material loose, gathering it, elevating it, and adjusting the scoop to the desired in and out position for discharge. Those are the hoisting line and the hauling line, and those only are employed up to that point in the cycle. And then the swing power is required in the one other direction for lateral revolving. Discharge is then effected by some discharging line or instrumentality, and swing power is applied in the opposite direction, and again the two major operating lines continue the cycle.

This Clutter machine was manufactured and sold by the plaintiff company. When the Clutter invention was first brought to the plaintiff company, this company was employed in the manufacture of deep well and shallow well drilling machines, and deep well pumps; that is for the drilling of water wells, gas and oil wells, blast holes and the like; and Mr. Clutter came to our company first with the idea of buying the traction mechanism, boiler and engine for handling certain new scoops which he had lately invented:—this, in 1912. Our company became interested in that, and instead of entering an arrangement for merely furnishing parts, took hold of the development of Mr. Clutter's machine. We paid Mr. Clutter for this ditching machine invention and the Clutter patents between $125,000 and $150,000, in licenses and in outright purchase of Mr. Clutter's patent, that is, of the ditcher. And we spent more money in whipping it into commercial form.

I now produce a catalogue of the plaintiff showing the Clutter machine in connection with its commercial history.

Mr. Richey: I offer that in evidence as plaintiff's exhibit P-13, Keystone Bulletin 901, October, 1919.

(Narrative continued.) I would like to mention the record of the sales of the Clutter ditcher as indicating the growth. I am reading from a memorandum prepared for that purpose. In 1914, of the Clutter ditcher, the plaintiff made and sold—

Mr. Corbett: If I may interrupt, as to these questions about value, we do not think they are of the utmost importance, but it does not seem to us that the best evidence is being presented here about the amount of money paid for these machines. It seems as though the plaintiff, if they were going to prove how much was paid, they ought to show what the nature of the agreement was, if it was a licensed agreement, how much was paid on each machine, how many machines were manufactured and sold.

The Court: Suppose you wait until cross examination on that, and see if you are satisfied.

Mr. Corbett: All right. And the books—is he speaking just from the notes there?

The Court: Witnesses in this type of cases usually have the data prepared from the books. You might cross examine him about the memorandum and see if you are satisfied.

Mr. Corbett: It seems as though the books ought to be here.

The Court: Cross examine him about the memorandum.

Mr. Richey: It goes to the commercial success. The exact amount of machines does not make any difference. We are patent lawyers.

Mr. Corbett: Patent lawyers sometimes contract the rules. If we are going to have evidence of the value of these machines, we ought to have the best evidence. That rule still prevails even though we are patent lawyers.

The Court: I agree with you; but I suggest you cross examine him. You may be satisfied on cross examination.

Mr. Williams: Should not that cross examination be had now before he testifies?

The Court: I suggested that.

Mr. Richey: There is no jury here. You know whether it is competent or not. It goes to the commercial success.

The Court: That is not the objection. The objection is that this witness has a summary here, undoubtedly made up from the books of account, or something of that kind. Ordinarily, before a witness can testify from a summary of that kind, the books have got to be in court so that opposing counsel may cross examine him.

CROSS EXAMINATION by Mr. Corbett.

Q. Who made these records from which you are testifying? A. R. F. Patterson, engineer, and Mr. F. B. Ransome, assistant sales manager.

Q. Is he here? A. Mr. Ransome is now located in Joplin, Missouri.

Q. And the other man? A. Mr. Patterson is here.

Q. Is he here in court? A. He is here.

Q. Has he the books with him? A. He has not the books with him. This is Clutter's sales report made in 1926 prior to the hearing by Judge Westenhaver.

Q. Does Mr. Patterson keep these books from which these records were made? A. These records were made from the sales records. He does not preserve the sales records.

Q. It is not a question of preservation—whether he actually kept the books; did he keep the books from which these records were made? A. No, sir, he did not.

The Court: Are those books still in existence? A. They are in our plant.

Q. Will you produce the books before you close the case? A. If it is material in this matter, I am secretary of the company.

Q. I think it is material we should have an opportunity to inspect them.

Witness: These books are very cumbersome, of course, and they are used in our regular doing of business; but they can be transplanted, cabinet and all, if it is necessary.

Q. Then as I have got the situation, you are testifying now from a memorandum made by Mr. Patterson, who did not keep the books? A. And by the assistant sales manager, whose business it was to accept orders and enter the orders.

Q. This assistant sales manager didn't keep the books, either, did he? A. He entered the orders.

Q. Let me ask you another question. Was this $125,000.00 that you have testified to, or $150,000.00,—was that as the result of a license agreement? A. In part.

Q. Have you got the license agreement? A. I do not have it here.

Q. Can you produce, and will you produce it? A. I can produce it,—

Mr. Richey: I don't think it is necessary to produce it.

A. (continuing)—or I think it could be brought. I would have to direct some one else to produce it.

Q. Was it on a royalty basis? A. On a royalty basis, yes, sir.

Q. And finally this question: That is only for the ditcher attachment? A. Only for the ditcher. There was another $150,000.00 paid for the skimmer.

Q. And you had some trouble, didn't you, with Mr. Clutter about the payment of this? A. Might be regarded as trouble. It was before I was directly in the management.

Mr. Corbett: I don't want to extend this examination, Your Honor, but I just want to get this record to show these facts.

The Court: It seems to me that you are not interested in these other records unless you are denying that the plaintiff has title to this patent.

Mr. Corbett: No, Your Honor, but he is trying to show the value of these patents by second best evidence.

The Court: I don't think that can be accepted,—no difference what somebody paid for it. Is that your claim, Mr. Richey?

Mr. Richey: No, Your Honor, this goes to the commercial success.

The Court: Well, what you paid for it before you put it on the market isn't any evidence of commercial success.

Mr. Richey: Well, it goes to the value of the invention.

The Court: Well, that is what you thought it was worth at that time.

Mr. Richey: Yes, sir.

Mr. Corbett: He is trying to prove the value of the invention by the money paid for it, is the point.

Mr. Richey: We are trying to show that the man knowing all those matters should know the value of those things, and ask the court to accept that rather than what some patent lawyers say about it; that is the purpose of the testimony.

Mr. Corbett: We admit that the plaintiff may have paid $125,000 or $150,000. It frequently occurs that they pay it, and pay it mistakenly, and we think they ought to confine themselves to the best evidence. We notice in the Cleveland case there was assertion after assertion made, without any foundation in fact, and we are going to show some of those, and we would like to confine this record to the facts.

Mr. Richey: Well, my position is that he is Secretary of the company, and we have gotten in these big companies where you can't call the man who put down the entry any more, but you have to call somebody who has had charge over those things.

The Court: That is so, but then the books should be there, and there are limitations as to that. Now this witness personally doesn't know anything more about it than I do, apparently.

Mr. Richey: Well, it isn't so important that those figures are exactly correct.

The Court: No.

Mr. Richey: He knows that they are about correct; he knows they sold about so many machines the first year and so many the second year.

The Court: If he knows that without the books, of course he should testify that way.

Mr. Corbett: All he knows is from hearsay.

The Court: He hasn't qualified on his own statement here to testify on the subject.

Mr. Richey: Well, technically, Your Honor, I admit that is right.

The Court: Well, they are making the objection.

Mr. Richey: Yes. Of course, I can appreciate Mr. Williams' position. He tries those kinds of cases. But in these patent cases we often take short cuts about these matters.

Mr. Williams: Not only is it hearsay, but it is third-hand hearsay, by somebody who don't know anything about it himself. In other words, he is testifying from a statement made by a salesman.

The Court: I have taken the same objection.

By Mr. Richey:

Q. Well, Mr. Downie, tell them independently of any comments on anything else, about the history and the sales of this Clutter machine, about how many were sold. You don't have to say any exact figure, but from year to

year, about what they were. A. I was familiar with that, and saw the machines leaving the plant, demonstrated the machines with the customers, and therefore have rather an accurate idea as to how many were sold from having seen the machines leave.

By Mr. Corbett:

Q. Isn't it a matter of fact that between 1914 and 1920 you were only intermittently employed by the Keystone Company? A. That is true.

Q. What do you mean by intermittently,—that you were employed there only in the Summer vacation? A. That is right.

Mr. Corbett: He has testified to the whole year, and he was employed at that plant only in the Summer vacation, Your Honor.

Witness: I haven't said I was employed at the plant during the whole year.

Mr. Corbett: How could he know, then, Your Honor?

The Court: Well, I don't know whether he does or not,—if you ask me how he knows.

Mr. Corbett: We would like to have the records, and then we could check the matter.

Mr. Richey: I think I will ask to have the answer taken, if the Court will permit me, no matter what the view is of the pertinency of it, because, as I say, that is the kind of testimony we put in on those things. It isn't like trying to prove an account.

The Court: If this witness says he knows, you will have to take the testimony, and then test it by cross examination, that is all, and find out whether there is any foundation for his belief that he knows.

A. The Sales of the Clutter ditcher in 1914 were five, approximately. In 1915 they amounted to between 15 and 20; in 1916, from 30 to 50; 1917, from 70 to 75, or perhaps 100; and by 1920 amounted to over 150, totaling in the period, including 1914 and 1920, something over 600 devices. That is the commercial rise accorded by the trade to this device.

By Mr. Richey:

Q. Now, will you look at the catalogue which I hand you and state whether or not that is a catalogue of the commercial Clutter machine?

The Court: Has that been marked as an exhibit?

Mr. Richey: This is P-13.

A. From plaintiff's Exhibit P-13, entitled Keystone Traction Steam Shovel Model 3, a catalogue of the plaintiff company issued in October, 1919, and identified as Bulletin 901, I make the following references: This machine illustrates the model of handling machine made by plaintiff in the period from 1913 up to the present,—machine of the type called a non-revolving shovel or excavator, Model 3. It handles a complement of scoops, including the skimmer scoop as shown on the first page of the bulletin; also the scoop shown on page 5 of the bulletin.

The Court: This is before the Downie patents, is it?

Witness: Before the Clutter patent.

The Court: Before the Clutter patent.

Witness: Before the Clutter ditcher invention and scoop was made. The scoop on page 5 of the bulletin is of the outward arc type.

By Mr. Richey:

Q. Well, will you limit your discussion to the ditching machine shown there? A. All right, sir.

(Narrative continued.) On page 7 there is the ditcher device of the patent, a photograph made of one of the first of these Clutter ditchers, and in which as one of the incidents of development, the links extending from the housing sheave to the upper end of the stick were found, upon field use, to contact at an intermediate point of their length with the upward forward corner of the extension members of the boom, limiting in this manner the inward sweep of the scoop, and detracting a little from that sweep. This contact of which I speak occurred on the first ditcher scoop as used at Conway in 1914. This limited the movement of the stick toward the boom, except for the bending of the link, which is what in fact occurred. The bending of the link, of course, removed the limitation in the movement of the scoop, so that in fact it was merely a slight distortion of the parts or links extending from the housing sheave to the head of the stick. Views as shown on the second page of the catalogue indicate the revised form of the link, for the link was revised immediately upon, or in regular course after the contact had been discovered.

This is a view of one of the very early machines, showing the connecting links slightly curved at an intermediate portion of their length, instead of straight as the links in the Clutter model here are. The contact

occurs here in the Clutter model, since the model was made to follow the patent, even more definitely in that one detail than the commercial machine. That was one of the faults of the original Clutter at the time.

The Court: Is this before the patent was issued, or after, Mr. Richey?

Q. What is the answer to that? A. Before the patent was issued.

Mr. Richey: Just one of those details,—incidental things that happen,—that show the difference between the drawings and the commercial machine.

(Narrative continued.) I saw the Clutter machine in operation and also operated them during the period between 1914 and 1920. I saw them operated in a great range of material, from sand and loam to very stiff shale, and relatively harder materials, including slag from blast furnaces, which is frequently encountered in the Pittsburgh district. I worked on a job in Woodlawn in the Summer of 1915 digging slag for a number of new houses being built by the Jones-Laughlin Steel Company, which was in part dug without blasting, but in part required blasting operation. The difficulty there in blasting was that when working adjacent to buildings already in place there was, of course, objection to the force and noise of blasting work. This argued digging the material with the machine, with the maximum of its capacity.

Q. Now, this Clutter machine at all times had the fault of inaccuracy in discharge and difficulty of getting clay out, didn't it? A. It had, from the first.

The Court: Well, this is also before the patent was issued?

Witness: Yes, sir.

The Court: All right.

(Narrative continued.) The Clutter patent was issued in September, 1919, I believe. The application was filed in February, 1915. The commercial use arose from April, 1914, principally to 1920, and as a subordinate device since that date.

Regarding the two defects in the machine, the defect of which I first spoke was promptly remedied upon discovery; that is, the defect of the connecting links touching upon the outer end of the extension irons. This was a draftsman's error in laying out and providing for the motions of the device. Whether that was remedied on the first machine or the second or the fifth, I couldn't

say, but it was remedied very promptly. I have talked to the operator who operated the first machine, and from whom I learned that the bars bent as soon as strained slightly by the contact. The other defect of which you spoke was not a trifle of drafting, but was inherent in the Clutter organization with all of its merits and utilities. It resulted from the use of the hauling line for the double function of revolving the bucket into its closed position and also revolving the stick inwardly. That combination of functions of the one power member was necessary to avoid recourse to an additional power member, and still having or retaining fixed presentation for the striking of the gravity blow and a presentation independent of the work; that is to say, Mr. Clutter could have attached his hauling line to the base of the stick and rested his scoop upon the ground and allowed ground pressure and the weight of the device to revolve his scoop into closure, but would have thereby sacrificed independence of presentation and would have had to go through that operation in order to strike a blow, or to dig any other material. The trouble did lead, as has been said here, to breakage of wagons, the spillage of material, and to rendering more difficult than it would otherwise have been the acquiring of the skill necessary to operate the machine.

As to efforts that were made to get away from these known defects in the Clutter machine, I know that the troubles of the spillage and the wagon breakage were widely known. I do not know of all the efforts, but I know of two made at the Beaver Falls plant, beginning in 1919, and in demonstrating the machine I had one idea in mind for remedying it, and the ditcher was made relocating the pivot of the scoop at a more central point of the scoop. This eventuated in the Wagner et al. patent. We then made another one to further minimize or remedy the wobbling action of the Clutter scoop in time of discharge, before the drop bottom patent here in suit was evolved. This difficulty was universally known wherever the ditcher was used, and the company were making efforts toward a solution of it before that period.

Q. Now, here are some photographs of the Clutter machine which I have marked P-14. They were in the Byers case. Just point out to the Court, if you will, what was the cause of bending that link there? A. Referring to Plaintiff's Exhibit P-14, this is a series of photographs showing the first Clutter ditcher, operating at Conway, Pennsylvania, in April or May, 1914.

Mr. Corbett: We object to this evidence.

Mr. Richey: If you dispute that point, it may go out about the date, because he don't know that of his own knowledge.

Mr. Corbett: Yes. We want that proved by people who know.

Mr. Richey: Yes, you are entitled to that.

(Narrative continued.) In the device here shown, the links, to which I have referred previously, are slightly curved. This curve has resulted from the contact of the intermediate point on the under edge of the link with the upper and outer corner of the boom extension irons, the links not having been so curved at original manufacture, but as a result of operation, as when, assuming the machine to be in the position of the third in the series of photographs, the scoop would be pulled by the operator further toward the boom, or sufficiently further to bring the link down into contact with the boom extremity. This was the result of the interference which has been referred to.

The inaccurate dumping and inability to discharge clay and material in the Clutter machine was overcome by the drop bottom ditcher, as developed in 1920 or '21; that is, the first Downie patent in this case. I will now take up and explain the structure of the machine of the first Downie patent, its operations, its advantages and I will use the second model here to demonstrate them.

The Court: I guess this is a good place to stop.

Mr. Richey: I offer this Clutter model in evidence as Plaintiff's Exhibit P-15.

(Adjourned to 9:30 A. M., Wednesday, March 4, 1931.)

(9:30 A. M., Wednesday, March 4, 1931.)

(Hearing resumed.)

DIRECT EXAMINATION of REX R. DOWNIE by Mr. Richey continued.

(Narrative continued). This is the first Downie patent in suit No. 1,511,114. In this machine there is a boom 2 in the patent, a ditcher stick No. 11—

The Court: Well, the first Downie patent covers some improvements on the scoop, doesn't it?

Witness: Yes, sir, and the entire combination. There is a scoop extension and also the stick, and then the assembly.

The Court: All right; go ahead, then.

(Narrative continued). A scoop No. 23, attached beneath the lower end of the ditcher stick 11 by means of suspension members 19, and with bracing means between the feet of the stick members 22 with braces 20 extending from the rear end of the scoop to an intermediate point in the length of the ditcher stick; a pivoted bottom 25 carried by the scoop body and mounted for angular movement of sufficient extent to permit the use of momentum closure; a hauling bail 40 attached to the sides of the scoop for connecting therewith the hauling line 43; a latch mechanism carried upon the end wall of the scoop to an interengaging part on the bottom for securing the bottom in closed position, retaining it in closed position throughout the digging cycle and all of the digging functions of this machine, and made so as to be releasable at the will of the operator or a special tag man.

There is at the head of the stick a linkage connecting the head of the stick with the hoisting line; these parts are numbered 16 in the patent, and in this form are curved. There is the hoisting cable 18 analogous to the hoisting cable of the Clutter machine, No. 21 in the Clutter. A part not numbered, but entering the assembly, is a sheave carried upon the boom at an intermediate point in its length as a guide for the hauling line. There is as one of the distinctions between this device and Clutter a long bearing employed for the pivoting of the stick upon the outer end of the boom; these bearings are numbered 7 in the patent.

There are teeth secured to the side walls of the scoop outside of the cutting plane or of the edges of the cutting plane of the bottom, No. 27, which extend forward over and protect the bottom pivot bolts 28 with sufficient flare and the flare located at such a point as to cut clearance both for the upper region of the scoop as required for leaning the device towards one side or the other in the trench for modifying the generally downward direction of progress of the excav tion, and to preserve a clearance for the rear portion of the scoop such as to permit the scoop to be operated in its alignment in a horizontal plane from its previous stroke in order to modify the generally forward direction of excavation. That completes the explanation of the parts of the patent.

I will now explain the model of this machine and the operation and advantages of it. This machine operates in the same field as the Clutter machine, with corresponding functions and certain additional functions. All of the operation is below the grade or the bounding plane of excavation, upper bounding plane of excavation, except for the one sporadic duty of back-filling trench. I might mention that more particularly, since it has come to Clutter and the drop bottom ditcher. The spoil from the trench when deposited upon the ground, and after the laying of pipe, desired to be backfilled, with both Clutter and the drop bottom ditcher, the handling machine is placed upon the opposite side of the trench from the spoil pile, and the machine, the ditcher, is extended across the open trench and used to haul or slide the loose material into the open trench. It is permitted, of course, because the open excavation intervenes between the machine and the scoop, but except for this all of the work of the two machines is down below grade. There is the same two-line control reserved, the hoisting line and the hauling line. The same auxiliary or incidental functions are to be performed in this machine as in Clutter, the tripping of the scoop, the side swinging to the left and to the right. The same striking of a gravity blow is performed by the drop bottom machine. There is in the construction of the stick an overhead bail of the scoop, and the mode of attachment of the stick and the scoop structure directed toward perfecting this utility and toward the attainment of an added utility, that of undercutting the walls of the trench. I might illustrate this by lowering the scoop to a point below and as though into an already begun trench, as by applying swing pressure to the housing line or to the boom, swinging it to one side the stick is caused to lean toward the one side, that is, toward the side to which the boom is swung. Now as the scoop is drawn towards the machine it will excavate, not in a vertical line as when unrestrained, or as when the stick is vertical, but in a sloping line toward the side, or rather toward the opposite side from that toward which the stick leans. This is, of course, highly useful for avoiding obstructions which either cannot be excavated, as boulders protruding into the desired excavation, true line of excavation, or in avoiding things such as curbs along streets which are desired to be undisturbed. In performing this work it is necessary that the scoop should travel along a line or in a plane parallel with the general plane of excavation, and in spite of the engaging capacity and tendency of the side

rake teeth, the scoop must not be allowed to be revolved out of its digging plane; that is, if pressure is caused against the right hand bank, the structure must be such as to prevent the scoop from being revolved so as to be pointed or cocked toward the right hand bank. This involves the structure connecting the stick to the scoop especially, and the stick itself, as well as the bearing at the upper end of the stick for preserving the alignment of the stick and the boom.

For the practice of this function in greatest extent and where demanded most definitely, a boom with some tortional resiliency is needed. It will be noted that in the model here the boom may be twisted a matter of 30 degrees out of its alignment as between the forward end and the rear end, without permanent distortion. In the commercial machine this is also true, as of the model as made up to this time, and one of the models offered by plaintiff.

The elective movement as possessed in the Clutter machine is carried forward in this as based upon the same utilization of two power members for the four primary movements which vest in the operator this election. The 180 degree travel with its various utilities, simple discharge and contributor to gravity blow, vertical sinking of excavation, discharge of spoil at maximum outreach, are preserved in this construction.

Independent presentation, a closure effect in mid-air, not requiring contact with the work, is also obtained in this construction by what is called momentum closure of the bottom. The bottom is pivoted freely to the side walls of the scoop at a low point, and as far toward the digging end as possible, and, as stated in the patent, secured by means of an automatically engaging latch at the rear end of the bottom. This momentum closure is explained in the patent and consists, assuming the bottom be hanging vertically open, in a releasing movement of the hauling line causing outward movement of the scoop, a sudden arresting of that movement, as performable by the model, although in faster time, of course, than would be true in the commercial machine, and this closure, it should be explained, is augmented in its commercial use by a coordination in the manipulation of the hoisting line. As the hauling line passes out and the scoop rapidly moves outward from the boom, and the hauling line is restrained, and as the bottom begins its movement up toward the scoop, its attainment of the closed position is considerably augmented, or hastened,

by the sharp and short release of the hoisting line, dropping the scoop four or five inches. This adds to the force available for swinging the bottom in case the material is extremely muddy and tends to choke the bottom pivots, or whether due to severe digging conditions, and of course the pivots being unlubricated, and if material is such as to enter the pivots and tend to set up excessive friction, then of course the coordinated operation of the hoisting line is employed to make the closure more reliable.

This machine operates at single width, that is, excavating a trench of a width equal to the extreme transverse dimension of the scoop, as accomplished by the Clutter machine, and very usually for the same purposes, although carrying that single width excavation into substantially harder materials than was possible or is now possible in the Clutter machine.

The use of this in harder materials than the field entered by Clutter comes about from a new utility in the use of a pivoted bottom upon this inward arc 2-line controlled machine. This utility in the field we call rooting. The material dug by this ditcher is, of course, attacked in the first instance or part of the stroke at a very obtuse angle; that is, as when the scoop is presented almost at 90 degrees to the material; then is drawn through a decreasing angle into the horizontal, and then upwardly along a curve or sloping face of the work, and particularly in that quadrant of the scoop traveled wherein the scoop is pointed downwardly, that is, in the quadrant lying beyond that position indicated by the vertical position of the stick, the material is excavated into a trough form which of course will match the figure described by an outline of the tooth points; that is, it will dig to the shape of the cutting edge of the scoop as viewed horizontally. This, of course, is when the nose of the scoop is made so as to protrude substantially beyond the side rake teeth and troughed, and the material is excavated to that form. If, assuming such a trough, the bottom is released, the form of the cutting edge is deformed, the entire weight of the scoop, stick and a due portion of the weight of the boom is allowed to rest upon the side rake teeth alone, and the digging power itself, that is, hauling line power, is applied to the uprooting or excavating of the material lying in the path of the side rake teeth. Thus the scoop is drawn through the material with a greatly multiplied engagement forcing pres-

sure upon the side rake teeth, and a multiplied hauling power to effect excavation is produced by the increased engagement power.

The Court: When do you use the machine in that posture there?

Witness: In excavating materials too hard to dig by the ordinary process of excavation. That is, we run into materials which we are not able to dig in the normal way, and rather than blast the material or dig it out by some other means—and blasting is not the only way to get it—we use this rooting operation, employing the two parts of the tooth complement, both operating outward; that is, hard pan or shale, and things of that kind. There are some clays which are very stiff, but ordinarily they can all be dug by the ordinary digging process, unless there is mixed in small boulders of some kind which tend to roll the scoop about. In that case the rooting process is used.

Now, after the scoop has been hauled through the material on the rooting stroke, in which stroke of course no material is gathered, the bottom hanging or dragging open along the face, and the uprooted or fractured material merely passing over the bottom, after this stroke the scoop is lifted to clear and the bottom closed. Then the scoop is again drawn through the material, and it will be noted that since the side rake teeth have excavated the material lying immediately in their plane, that is, the plane adjacent, the region adjacent the wall, that then all of the weight or engagement forcing power of the machine is now concentrated upon the bottom teeth, the side rake teeth being in mid-air, and all of the digging power of the machine, horizontal digging force, is applied to the carrying through of such engagement as is effected. The method is extremely effective, and, as I say, extends somewhat the hardness capacity of the machine. I should say that frequently two or three passes may be required to complete the rooting cycle; that is, to carry the excavation to its original trough form wherein the side rake teeth can begin to engage, and at which point the bottom is again tripped and the fractured and gathered material is carried out of the trench —the bottom is again tripped and the side rooting or corner rooting work again effected.

This function was, of course, unattainable to Clutter because of his use of an integral scoop, and is of course not employed in any of the end dump scoops or any of

the drop bottom scoops employed in the skimmer field, because none of them have this outer quadrant or presentation in which the scoop is presented at a sharp angle to the ground, and as required for getting the correct presentation of the teeth; and of course, none of the skimmers or any such scoops ever employed these functionally equivalent side cutter teeth, so located as to root or tip their scoops in such a way as to root them if they had been so toothed. As I say, it is employed mostly in single width excavation, where a peculiar limitation is, as I believe I have mentioned previously, that the scoop is closely held to its first line or path of travel, and can not, so to speak, play back and forth over a space of excavation, as can a skimmer and the forward arc and drag line, or any other form of scoop employed upon a broader than single width of unit face of earth.

This coincident in the digging strokes results in hard material in making it necessary that a greater engagement forcing capacity is needed than is needed in a broad face of excavation, and renders the more critical the matter and the more difficult the matter of forcing the engagement, and hence of more value this extension of hardness ability which I have just described—rooting.

This machine as the Clutter machine, as stated in the Clutter patent, is attachable to any suitable handling machine having the requisite power of drums and mechanism for locomotion, and of course, the requisite stability, and this of course extends both in the side range and as to the kinds of country through which the machine can be operated,—its utility. The machine is used by plaintiff on two forms, chiefly, of handling machines, the one a revolving structure, and the other a type wherein only the boom revolves laterally, somewhat as this model does, and wherein the body of the handling machine remains stationary in the swinging operation. The utilities, however, of the ditcher are independent of the matter of the handling machine; that is, as between the two principal types of swing mechanism, and of course is independent of such constructions as the mounting, whether the handling machine be mounted upon wheels or upon crawlers. There has been a very great, almost universal, trend from wheel mountings to crawler mountings in recent years, and of course the utility does not depend upon any particular form or kind of motive power. Formerly all these machines were steam driven, and at that time Clutter and this machine were carried into the

field upon steam actuated devices; but now, almost universally, gasoline is used for the driving power. Occasionally electric power is used, but the effect, of course, is the same. It may be stated as a general proposition for the extending of the utility of the device, that is, independent of the kind of power, independent of the kind of mounting, independent of the kind of swinging mechanism employed for its support and actuation and relocation. Does that cover it?

Q. Now, have you named all the advantages of this machine? A. No.

Q. Will you continue? A. Yes, sir. The discharge of the material by gravity was, as I stated previously, important to Clutter, since it helped him to avoid the otherwise necessity of a third power line, and that feature of Clutter is carried forward and preserved in this machine. The releasing mechanism may be of such a relatively light structure and light duty as to bring it within the capacity of muscular actuation, and the load is not, of course, listed during the releasing operation, hence there is nothing but friction to overcome.

The bottom pivots, as I have said, of course are placed with reference to this matter of gravity discharge in order to preserve that feature, and also with reference to the closure employed, and since we have been employing it in the more recent years of the career of this machine with reference to the rooting function, the deformation of the cutting edge for the purpose of concentration alternately upon the bottom and side regions.

The further down and the further forward the bottom pivots are located, the greater, of course, is the unbalanced weight of the scoop, and the greater the exertion of the load toward prompt full discharge, the bottom and load being moved, of course, only by the unbalanced, and not by the entire, weight of the scoop.

In this machine there is what may be termed progressive breakage of the adhesion of the load to the scoop, which was the first step toward overcoming one of the defects of Clutter, which we explained previously; that is, with the unbalanced weight of the load and bottom, upon release of the latch, exerting a force or momentum tending to revolve the bottom downwardly at its rear end, that force is first exerted exclusively toward breaking the adhesion of the load to the interior surfaces of the scoop, the two side walls and the end wall of the

scoop, and there is in the first phase of the discharge operation no movement of the load of material upon the bottom, either sidewise or longitudinally. This use of the discharge force first for effecting one part of the task of adhesion breakage is the reason for the immediate and full success of this type of scoop in the discharge of those materials which rendered Clutter of limited acceptance. After the bottom has fallen a short distance and the adhesions of the material to the interior surfaces of the scoop, the interior vertical surfaces of the scoop, have been broken, and as the bottom falls on down, the adhesion of the material to the bottom is then broken by the load. In extremely sticky materials this load usually slides off the bottom, but in the event that it is so sticky as to adhere to it merely as a surface, even hanging between the vertical and the 45 degree slope, the bottom may be swung back and forth and the force tending to separate the material from the bottom greatly increased by the swinging action and the centrifugal force exerted upon the load. It is relatively seldom that an entire load will cling to the bottom so tenaciously as this, but frequently considerable cakes of material will do so—cakes of material, accretions built up.

As mentioned, this is an advantage not attainable in our Clutter machine. It was recognized as entering the scoop discharge difficulty, but of course regarded as inevitable that a below grade integral scoop—a below grade cutting at single width should be an integral scoop, and therefore that simultaneous breaking of the adhesions of the load to the walls just had to be put up with.

Another feature of the Clutter machine which has been remarked previously, is that of the lack of control of the operator over the motions of the scoop while discharging. You will recall that the Clutter hauling lines attached to one end of the scoop, and that as the scoop revolved to discharge its load, it, so to speak, yanks upon the hauling line, thus in effect jerking the stick and the scoop machinewardly with some violence. This had the effect of kicking the load out of the scoop and made it necessary for the operator to spot his scoop beyond the wagon far enough that allowing for such horizontal kicking as he thought the material, size of scoop, weight of load, etc., would produce, would land the material in the wagon, and far enough above the wagon that with the reasonable expectable effect of dip, the sideboards would not be knocked off the wagon by the teeth. It re-

quired great expertness to land the material in the wagon without injuring the wagon with Clutter, and it was the trial of operators. It did not prevent Clutter from functioning with passable success, even where conveyances are required, and of course it was no disadvantage to him where ground deposit was made, and the court will note that the unstability of the Clutter scoop in the discharge phase is closely involved with this matter of the breaking of adhesions to the walls of the scoop, because in the event of incomplete breakage of adhesions, a part of the load being retained in the scoop, if the operator sought to dislodge the remainder of the spoil by jerking upon his hauling line, he did exactly the opposite of that which would be required to complete the discharge; that is, the effort was ineffectual because the jerk which might loosen the adhering remnant of the load also revolved the scoop slightly towards its closed position and thus prevented the run-out of material which might have been caused if the scoop—or might have been caused to remain stable when the snapping action or jerking should be applied.

Now, when we came to the construction of this machine, and the thing which led to the invention of this machine, was the perception that it was inevitable that Clutter's prime utility of two-power member control, with his use of the integral scoop his performance, and the hauling line secondary function of scoop closure through and ahead of its primary function, that of hauling the stick and scoop towards the machine—it was inevitable that at discharge there should be this yanking that I spoke of on the hauling line, and that therefore there should be the machineward kick of the scoop and stick. In Wagner, et al. patents, and in another machine made between Wagner and the drop bottom, we shortened up that distance from the hauling line connection to the scoop, to the pivot of the scoop to the stick, on the theory and with the object of diminishing or mitigating this machineward kick of the scoop at discharge. This was the prompting object, and the effort, of course, being to at once retain Clutter's prized advantage of bringing all functions within the two lines and control of the operator's two hands, but still escaping the scattering of material and the damage to conveyances resulting from this instability produced by the falling of the load leaving the scoop, and further, as set up or caused, if the operator should try by yanking upon either of his two

cables to loosen any adhering remnant of the load. Therefore when we came to this machine of the patent now under discussion, the first and beginning point was an attachment of the hauling line to a scoop which is always stable with reference to the stick in the digging phases and in the discharge phases, the forces being great or slight. And of course this lent the device the characteristic which it now has and which of course has caused its displacement of the actual mechanism made by Mr. Clutter, and the American market; this stability in discharge, with the facile discharge as permitted by the progressive breakage of adhesions, stability of the scoop when yanked for completion of discharge of any adhering materials.

I have here photographs marked "Plaintiff's Exhibit P-16" showing a machine similar to the model operating in rocky soil. The plaintiff's Exhibit 16 illustrates work down in this region in which one of our earlier machines of the type of this patent is employed for excavating shale and rocky soil. The machine is shown in the first view just beginning the digging stroke; in the second view, discharging over the spoil pile by the method which I have called ground deposits, or simple discharge; and in the third view is beginning a digging stroke. In two of these views, the smoke caused by the pressure of the teeth upon the material is apparent. I have seen, of course, many such jobs in the field, and all of the features of the views appear there to be in the normal course of operation of Keystone employed in relatively wide sewer work.

Mr. Richey: I offer the four photographs in evidence as Plaintiff's Exhibit P-16; and the second model which the witness has been discussing I offer in evidence as Plaintiff's Exhibit P-17.

(Narrative continued) The machine of the first Downie patent was manufactured and placed upon the market by our company in the year 1921. This catalogue which is marked "Plaintiff's Exhibit P-18" is the catalogue of the company showing this machine. The catalogue was issued in January, 1921, showing the machine of the patent under discussion. We continued to manufacture and sell the type of machine shown in that catalogue of January, 1921, with revisions, of course, over three and four year periods, of improvements for strength and capacity—we are manufacturing it today as our standard ditcher.

The Exhibit P-18 is the catalogue which I have referred to as having been issued in January, 1921, being bulletin 903, first edition, and as showing the ditcher as used in experimental work in 1920 and as carried into commercial use in 1921, the ditcher being of the type of the patent under discussion. Views showing this machine are to be found on the inside of the flyleaf of the book, that is, page 2 unnumbered; on page 12, in which view the ditcher stick construction, boom, linkage and cables are shown in phantom, on pages 26, 27, 28, 29, 30, 31, with a diagram on page 37. The position of the machine as seen on page 27 shows the approach to the work, either for the striking of a blow, as has been explained, or for the beginning of excavation, although in this view excavation has been already begun. The views upon pages 28 and 29 illustrate two successive stages in the operation of discharging into a conveyance, the scoop being first, as on page 28, brought over the spot at which the load is desired to be placed, the bottom being then tripped as indicated by the bottom line in the view, the scoop being then lifted away from the load, and the load tumbling into the conveyance. From this phase, of course, the scoop is lifted further and swung about, and the bottom closed, as might be illustrated by the view on page 30. On page 31 the machine is performing the operation to which I have referred as the one sporadic use of the Clutter, and this ditcher, for above grade material handling—not a true digging function, but the handling rather of loose material, that is, backfilling in an open trench.

This machine was manufactured by our company for a matter of two years or more before we incorporated the improvement of the second Downie patent 1,543,250. We had what we have referred to here as a blind spot in our operation of the machine; that is at elevations above the ordinary, or low elevation for dumping, we encountered a position in which the hoisting lines' direction of pull either intersected or came so near to intersecting or being intersected by the stick pivot that a relatively feeble outthrusting force was exerted upon the scoop, and causing restriction of our discharge area, or, at extreme elevation, preventing our having a zone or range of discharge, and the effect of this intersecting of which I spoke being that it caused the scoop to click against the boom in such a way that it could not be swung out until the boom had been lowered. This, of course,

tended to restrict the use of the machine for those larger trenches wherein the spoil pile may be very high, and calling for a device capable of discharging at relatively greater elevations or for excavating where the conveyances may be placed upon a slight elevation with reference to the supporting plane or grade of the machine, and thus make necessary the positioning, spotting and discharge of the scoop at higher than normal elevation. The immediate and obvious solution of merely lengthening the upper arm of the ditcher stick was not in our judgment and experience desirable and permissible for the satisfaction of the condition which I have described; that is, the attainment of a reasonably effective in and out positioning range at extreme elevations. The reason for this prohibition in our judgment as the pioneers of the device and users was that such increase in the length of the upper arm for the purpose of preventing the intersection of which I have spoken would increase that antagonism which exists between the hauling line and the hoisting line, and which opposition or antagonism, while in itself objectionable, causing an irregular movement in the device, is nevertheless indispensable to it and to be highly prized because it permits the securing of the outer quadrant of digging travel without a third power line, and it has to be kept at a minimum because of its power weightage potentiality and its tendency to misdirect the application of force; that is, I mean by that, that if the hoisting line is held perfectly stationary and the scoop is hauled toward the machine by the hauling line, there is an elevation occurs in the entire device, and so I refer to the lever scoop or antagonism of the lines as being misdirective to the hauling line effort, not delivering all of the hauling line power applied to the pure exertion of the teeth, but allowing a part of it to go over into the hoisting effort and likewise that in the use of the hoisting line, as for uprooting an obstacle, some effort must be exerted upon the hauling line in order to maintain the engagement of the device with the obstacle, otherwise the scoop will lift away from the obstacle and uprooting effort cannot be exerted. This is a wastage of power, except for permitting the machine to operate with but two lines, and is the antagonism to which I referred. We normally operate by retaining both of our lines upon clutches suited for instantaneous reversal of direction on mere reduction or application of full power. We of course

noticed and are very much aware of the wastage which results, and operators are aware that if they secure such an engagement upon straighter sloping in such a way that they do not happen to need hauling line effort in order to uproot, the uprooting effort is considerably more effective.

Referring to photographs marked "Plaintiff's Exhibit P-19" and also referring to the second Downie patent 1,543,250, I will now explain the structure, its operation and result and use these photographs to aid in the description of this patent.

In the patent referred to there are links 15 corresponding to similar links in earlier patent, and abutments 23 which inter-engage with suitable surfaces upon the ditcher stick bearing 19. In this patent also the stick and the scoop are the same, otherwise than as I have indicated, as in the earlier Downie patent.

The Court: Well, the only purpose of that patent was to avoid the blind spot, was it not?

Witness: Yes, sir. The machine as illustrated in Fig. 1 of the patent shows the abutments engaging and the scoop at approximately the outermost point of its range at that elevation. In the photographs P-19, the first view illustrates the machine at extreme elevation and with the abutments removed for the purpose of illustrating the result of not using them, and with the hauling line removed to indicate and illustrate that the position of the scoop is entirely under the control of gravity, and not modified by hauling up line.

The Court: In other words, when it is in that position there would be the blind spot?

Witness: Precisely.

The Court: All right.

Witness: Now, then, in view 4 the elevation of the boom is the same, and all conditions are the same except that the machine has been elevated to this position with the abutments in place.

The Court: So as to avoid the blind spot?

Witness: So as to avoid the blind spot, and producing the four feet and a half of additional spotting range obtained by the employment of the abutments. That, I believe, completes the explanation of the patent, and the interpretation of the photographs.

The Court: In other words, you avoid the blind spot by not permitting the scoop to ever get into the position which is shown on P-19 first?

Witness: That is correct, sir.

The Court: All right.

Mr. Richey: I offer these photographs in evidence as Plaintiff's Exhibit P-19.

The Court: All right, you may have them.

(Narrative continued). The machine as modified and embodying the improvements of the second Downie patent was manufactured commercially, as shown in the catalogue which was just handed me, marked "Plaintiff's Exhibit P-20."

Mr. Richey: I offer this catalogue in evidence as Plaintiff's Exhibit P-20.

The Court: I am assuming that all of these Exhibits will be admitted. There has been no objection except that Mr. Corbett has reserved an objection to certain ones, and expects to make a statement on that later. That is, he may have some objection, and may not.

Mr. Richey: All right, sir.

(Narrative continued). I will now take up the third Downie patent No. 1,709,466, and explain its construction, operation and advantages. In this patent, the principal item of novelty is in the attachment of the stick and scoop in such a way as to make various widths or sizes of scoop usable alternately, an economical structure, one not requiring skill for installation of alternative scoops, and especially one in which under the severe stresses of excavating, and especially the striking of blows, will not cause or permit play to set up as between the scoop and the stick. For this purpose connecting elements, bolts 6, are placed so that with the tightening of the bolt all play is eliminated initially, and in such a way that if either with rusting, or with any over-stressing of the bolt, or in any other way, if play should develop, the elimination of it requires only the tightening of the bolt; the structure is, of course, so shaped as to withstand the downward forces in the stick as when the weight of the boom and stick are allowed to ride the stick in forcing the engagement, the overhead bail or part 25, a composite structure being generally bridge-shaped, and of course equally effective for resisting lifting force, whether by impact or in the slow process of digging. The only elements required to be removed for changing from one scoop to another

in the field are the bolts 28—I believe I previously referred to them by the numeral 6; that was an error, being apparently a sectional view guide—and the bolt at the rear of the scoop 32. The latch and releasing mechanism comes apart at the extremity of the lever on the rear of the scoop as is indicated by the drawing.

The merit of the device and of the machine is realized from its adoption in 1925, wherein elimination of play which had occurred in this earlier construction, wherein the more natural or at least usual form of attachment of buckets and sticks is employed, that is, where bolts are employed subjected to shearing for joining the stick base to the overhead bail.

The commercial machine shown in this catalogue, Plaintiff's Exhibit 21, embodies these improvements.

Mr. Richey: I offer that in evidence as Plaintiff's Exhibit P-21.

(Narrative continued). The structure itself in the Exhibit referred to shows in one view, called the 1927 coal scoop, the overhead bail like that shown in the patent, and wherein bolts are employed for securing the foot of the stick to the bail. There is another view in which the bolt head can be seen more clearly, this view to which I now refer being almost a direct side view of the scoop.

One function or advantage of the upstanding channel flanges as built from two angles is that the foot of the stick is gripped against displacement, as implied by twisting of the scoop with reference to the stick, and as would be developed and tended to develop when this process of undercutting was employed; that is, the cocking of the scoop towards one side. By the use of these flanges as an element in the mounting, and with the draw bolt between the flanges for firmly clamping the foot of the stick, the attachment bolts joining the stick and scoop are entirely relieved of this function of maintaining the scoop against side twisting, and the foot of the stick is carried as in a vise-like grip. I believe that completes the explanation of that.

I will now take up the fourth Downie patent 1,716,432, and by referring to the drawings and descriptive part of the specification explain its structure and operation, and will use Plaintiff's Exhibit P-21 in this description. This patent relates to side cutter teeth or side rake teeth,

as commercially termed, the chief departure from previous practice is that instead of employing a side rake tooth shaped only for excavating material in the vertical plane, a form of greater penetrative capacity is evolved. There is a point 19 of the side rake tooth which is in a leading position with reference to the upper structure; there is an edge 21 for the side shearing function performed in the side rake tooth of the previous structure, the principle of operation being that the point 19 penetrates and disrupts material lying in the path of the edge of the scoop, and that the shearing edge 21 then separates that material lying in the path of excavation from that lying outside of it, and the surfaces, such as 24 and 22 and 19, are so arranged as to, with the minimum of power and in the shortest horizontal travel possible, gather the material into the open mouth of the scoop. The importance of the matter comes from the peculiar duty of ditcher scoops as compared with skimmers and outward arc machines and the like, in that the single width cutting dirt scoop has to get all of the material lying ahead of it, and cannot force any material outside of it laterally, and this results in the rather severe lateral compacting of the material at entry, and therefore warrants specialized tooth structure and body structure for the minimizing or escape of this lateral compacting and for the economy of power. The tooth as shown in the first Downie patent was employed for many years, and in an effort to secure downward digging, durability and effectiveness in the teeth as first employed, the lower extremities of the side rake teeth were sharpened, to cut out the shoulder which developed in the harder materials, but the use of the merely sharpened edge is of only temporary advantage because the edge wears off and the tooth becomes a sled runner and tends to prevent the most effective penetration, either by the slow digging process or by the rooting method. And of course when we then formed the teeth of the patent under discussion, we expected to enhance still further the utility of the rooting method of operation as well as the slow digging method. The tooth was effective, was immediately adopted, and has remained in use since that time, and is the plaintiff's present commercial form.

Q. Yesterday you brought the commercial history of the inventions involved in this patent up until, I think, the beginning of 1921; that is, up through the Clutter era? A. Yes, sir.

Q. Will you begin where you left off and state in a general way the commercial history of the machine of the patent since then, telling us as near as you know of your own knowledge and remember the numbers that have been sold year by year.

Mr. Corbett: Your Honor, we object to that own knowledge of his. We ought to have the records here.

The Court: Well, he has a right to tell what he knows.

Mr. Corbett: We except to that.

The Court: Go ahead.

A. The drop bottom ditcher scoop as shown in the first Downie patent was standardized, that is, made standard with plaintiff, at the beginning of 1921; as I have said, the experimentation with it and development of it having occurred in 1920; and was immediately successful because, of course, of its—

The Court: Mr. Richey asked you about numbers,—the numbers that were sold.

Witness: Pardon me. The number of sales of the drop bottom in 1921 was something over 100, and in 1922 a matter of approximately the same number. The business in ditchers has amounted to approximately 150 in the average year, and the business in ditchers was simply carried forward on the drop bottom ditcher, from 1921 forward. All told there were some 1100 of the ditchers that have been sold to date, of the drop bottom ditcher. That is as near as I can answer from memory.

Q. State whether or not the machines you sold under these patents have been marked with the word patent and the date, or the word patent and the number of the patent? A. All of the machines which we have sold have carried patent license, or patent plates, showing the number of the patents on the machine, and in recent years the date also; both date and number.

Mr. Corbett: Your Honor, if he is answering of his own knowledge, that is one thing; but I don't believe he knows.

The Court: You will have to cross-examine him on that.

(Narrative continued.) Under the Clutter patent the machines were marked by the date of the patent, and with the word, "Patented," and our name. The machines under the first Downie patent were marked by

the date and number, or the date and the word "Patented". The same general marking was applied to the machines of the second Downie patent. Now, as to the marking of the third and fourth Downie patents, these patents have issued since our beginning the practice of showing both the number and the date. I have seen plates on the machines, on hundreds of them. How many machines, I do not know. I do not see every machine that leaves the plant, but I see the machines currently from day to day as they leave the plant, and all of the machines that I have seen leaving the plant carried patent plates.

These defendants have been notified of their infringement by letter. I produce letters with respect to the Osgood and the General.

The Court: Any question about them, Mr. Corbett? They were sent by registered mail, weren't they?

Mr. Richey: I think they were.

Mr. Corbett: I think that these letters were sent and received, probably. I do not recognize all of them, but I recognize the letters that we wrote.

Mr. Richey: I offer in evidence those relating to the Osgood Company, notice by plaintiff, as Exhibit P-22, and I offer in evidence the letters of notice to the General Company as Plaintiff's Exhibit P-23.

Mr. Corbett: We want to reserve an objection to them until we have an opportunity to check them.

Mr. Richey: If Your Honor please, we have now reached the point where we would like to go out and show you this machine operating.

Mr. Corbett: I would like to ask Mr. Richey if you are going to show the machine of the patent, and if so, which patent.

Mr. Richey: Why, this is the latest machine of the company, as shown here in this catalogue, and embodies all the inventions of all the patents.

Mr. Corbett: Your Honor, if you are interested to see this machine, why we don't want to stand in the way, but we object to the showing of a machine that is not relevant to this case. And I want to say in connection with the plaintiff's request that we demonstrate a machine or place a machine on this lot, that we, at the end of this case or later in this case after your Honor has a more complete view of it, if at any time you would care to

have us stage a competitive demonstration between the Osgood Company and the Keystone Driller Company under actual working conditions, we would be glad to do so. We leave that up to you. This showing here is merely for the purpose of comparing two machines which are really not even machines of the patent, as I understand it.

The Court: You mean that this machine that Mr. Richey has over here is not?

Mr. Corbett: He says it is a modern machine, but no doubt that will be brought out by the evidence. I think we will probably bring out the fact that there are features in it that are not involved here.

Mr. Richey: All right. I will take that up with the witness right now.

Q. Mr. Downie, where is the machine located that we are going to demonstrate to the Court?

The Court: Well, it is on the Sam Davis lot.

Q. Well now, compare that machine with the one I have shown you here in the catalogue, which I will mark Plaintiff's Exhibit P-24? A. It is the same machine as that shown in Plaintiff's Exhibit P-24.

Q. Does that embody any of the inventions of the patents in suit here, and if so, state of which patent? A. All of them. That is, the Clutter, the first Downie, second Downie, third and fourth Downie.

Mr. Richey: I offer that in evidence as Plaintiff's Exhibit P-24.

Mr. Corbett: Your Honor, if we are going to look at this machine—of course, we cannot pass on a comparison of the machine until we see it—but if we are going to look at this machine, or if there is going to be any discussion or explanation of the machine, we would like to have the stenographer along.

Mr. Richey: Yes, the stenographer should go along. That is perfectly agreeable to us.

The Court: You can take anybody along you want to. Mr. Corbett, do you think you would rather cross examine this witness before you go out there?

Mr. Corbett: No. I think I would want to see the machine first.

The Court: You want to see the machine, too, do you?

Mr. Corbett: Well, we have seen the Keystone machine before, and I think we can stand it to see it again.

Mr. Richey: We can suit the convenience of the Court. We can go now, or leave right after lunch.

The Court: I think the thing to do would be for everybody to get lunch, and start from here about 12 o'clock, to save time.

(Noon Recess.)

(Wednesday afternoon session; March 4, 1931.)

Mr. Richey: May the record show that the court, counsel and experts for the parties went to the coal yard of Mr. Samuel Davis, between Elm and Lagrange streets, Toledo, and watched the demonstration of one of the plaintiff's commercial machines such as illustrated in Plaintiff's Exhibit No. P-24.

Q. Mr. Downie, will you give a brief description of what was done at the demonstration before the court, counsel and experts for both parties which we just attended? Just more or less a list of the operations? A. The operations which have been described were executed by the machine included the striking of a blow, the beginning of excavation, the under-cutting of a wall, the rooting and the discharge of the scoop by both the dumping of the bottom and by simple inversion, and elevating the boom to such a position that the bridle and heels or abutments functioned for avoidance of the blind spot. The bottom was closed by momentum. That, I believe, summarizes the operations.

(Narrative continued.) The two catalogues of the General company, marked "Exhibits P-25 and P-26" and two groups of photographs marked "P-27 and P-28" show the General commercial machine, illustrating the ditcher at the central view on page 2, and elsewhere, in the catalogue, Exhibit P-25. I have seen these machines in operation, principally in the East, at New York and other locations in that neighborhood, before the bill was filed in this case. I will compare the ditching machines illustrated in those catalogues and photographs with the machines of the patents in suit and the plaintiff's commercial machine, where it relates to the patented features.

For the purpose of comparison I would select the Plaintiff's Exhibit P-27. Have you copies, Your Honor (shown court)? A series of photographs, the first view marked with the letter A. The machine shows a boom, the member on which the word "General" is lettered, corresponding to the boom 2 in the first Downie patent.

There is the stick appended to the outer end of the boom corresponding to 11 in the patent; the scoop attached to the lower end of the stick by means of the channel-shaped overhead bail as developed in the third Downie patent; the side rake teeth are clearly apparent of the form of the fourth Downie patent; the braces bracing the rear end of the scoop and attached at their upper extremity at an intermediate point in the length of the stick are visible; the hauling line is attached by means of a bail to the scoop, the bail being pivoted to the side wall; the hauling line extends over a deflector sheave located upon the boom and extending into the winding mechanism of the machine which is hidden from view by the cab. There is the hoisting line extending from the machine to a sheave carried in a bridle which, in turn, is pivoted to the head of the stick. The bridle in this machine is straight and in the position shown in views A and B is apparently put in contact with abutting ledges upon the stick members which function as the abutments of the second Downie patent. The bottom of the scoop is pivotally attached to the body and is releasable by a hand-operated line attached to a latching mechanism, and is so pivoted and mounted as to be closable and in operation is closed by momentum as set up by the coordinated manipulation of the hauling and hoisting lines. The bridle parts contact with the ledges or shoulders upon the stick members when the boom is lowered below a certain point, approximately the point shown in view A of Exhibit P-27.

The Court: Is that the construction that avoids the blind spot?

Witness: Yes, sir.

The Court: Is that on here? This picture does not show it, does it?

Witness: I shall look for other views which show in more detail the formation of ledges or shoulders which function as the abutments of plaintiff's second patent: View D of Plaintiff's Exhibit P-27 illustrates this construction. It will be there seen that the inner flanges at the rear of the head of the stick have been cut away for the clearance of the bridle in its rotation about its pivot to the stick; and that at the lower extremity of that slot there are shoulders upon which the bridle may contact at a certain point in the elevation of the device; and on the under edge of the bridle there is apparent a notch worn by this contact, indicating the pressure developed

between the bridle and the ledges or shoulders referred to, due to elevation of the device into the blind spot range; and such contact functioning to prevent the sluggish action which would be developed.

The Court: Is that the same construction as yours?

Witness: The construction is like it, Your Honor, in function, although we do not use a bridle extending between the members of the stick. We, in the construction we have shown this morning, cut the stick off at a point closer to the boom than is done in the defendant's machine, causing the bridle to contact directly upon the head of the stick rather than upon a ledge removed some distance from the upper extremity. The functioning of plaintiff's structure and defendant's structure is precisely duplicate although the details of the structure are altered.

The view E of Plaintiff's Exhibit P-27 illustrates the link in contact with the shoulders of the stick members as when the device has been elevated into the critical range, and where the deflection of the hoisting sheave would be desired and is used to obtain the focus for outthrusting the lower end of the stick.

View F shows the machine with the bottom opened, that is, hanging vertically as employed for discharging material or in the position preparatory to closure.

View G is a similar view.

View H may be referred to as indicating the structure of the third Downie patent, showing the channel-shaped overhead bail of this defendant, the bail being of course integral with the scoop and receiving between the side walls of it the base of the stick. The base of the stick carries joining or clip angles, secured to the stick members on the one hand, and secured to the bail of the scoop by means of bolts which are apparent. These bolts are and can be subjected only to tension stress, the stresses vertically upward in the scoop being transmitted as a shoulder stress upon the base of the stick for the opposite construction. There is a bolt at the rear of the scoop fastening the braces to a ledge located upon the rear wall of the scoop.

(Whispered consultation between court, counsel and witness.)

Witness: A question has been asked as to the views D and E, as to whether the upper end of the stick as shown in E is the same as that shown in D—if I understand the question.

Mr. Reed: That is right.

Witness: Yes, as I read these views, the identical parts are shown here. In the view E the uppermost extremity of the stick is the same as the extremity located at about the elevation of the upper edge of the bridle in view D.

Mr. Reed: I see it now. Thank you.

Q. Is that all? A. Yes, sir.

Q. The machine of the defendant, the General Company, operates the same, performs the same functions and realizes the same advantages as the machines of the patents in suit? A. That is correct, sir.

Mr. Richey: I will offer those catalogues and photographs and exhibits as Plaintiff's Exhibits P-25, P-26, P-27 and P-28, respectively.

Q. I now hand you a catalogue of the Osgood Company, which I have marked P-29, a group of photographs of the same machine which I have marked Exhibit P-30, and the second photograph which I have marked P-31. Will you look at them and see what they illustrate?

Mr. Mahoney: Just a moment. Objection.

Mr. Corbett: We want to reserve an objection to the photographs until we have a chance to examine them.

Mr. Mahoney: To all three of these exhibits.

The Court: All right.

Mr. Corbett: I did not get the question.

Mr. Richey: I asked him what they show. You do not deny that; you stipulated it.

(Photos shown counsel.)

Mr. Corbett: We want to object to the introduction of these photographs. We do not know what they show; who took them; whether they show our machine or not. They must prove them in the regular way.

Mr. Richey: We will ask the witness about it.

Mr. Corbett: You will have to prove he took the photographs.

Mr. Mahoney: We object to them.

Mr. Richey: All right. The objection is noted.

Mr. Corbett: These are Exhibits 30 and 31?

The Court: 30 and 31 are involved now?

Mr. Richey: Yes.

The Court: And the question is whether they are photographs of their machines?

Mr. Richey: Yes.

The Court: All right.

Q. I will ask you what they show? A. All of these photos and the ditcher views in the catalogue pages illustrate the Osgood commercial ditcher.

Q. Have you seen machines like those illustrated in Exhibits Nos. 29, 30 and 31? A. I have seen several machines identical with these at various times.

Q. Have you seen them operating? A. Yes, sir.

Q. In commercial operation? A. In commercial operation.

Q. Where and when? A. I have seen them principally around New York. I have the location of one such machine I saw.

Q. The particular location does not matter; within what range of time? A. Within the past three years.

Q. Is the same machine illustrated in all those Exhibits, 29, 30 and 31? I do not mean the same identical machine but the same type of machine? A. Exactly the same type and form of machine. There are minor distinctions notable. One view on view No. 1 of P-29 shows what I believe is an earlier form of the Osgood ditcher in which the stick is of somewhat lighter construction than their later commercial construction. But as to function and as to general arrangement, all of these ditchers are alike.

The Court: The same machine with a heavier stick, is that it?

A. That is right.

Q. You did not take those photographs yourself? A. No, sir.

Q. Were you present when any of them were taken? A. I was not present when these were taken.

Mr. Corbett: We do not think those photographs are relevant here. He has not proved he knows they were taken of the Osgood machine.

Mr. Richey: They have Osgood marks all over them.

The Court: He is in the same position that Mr. Osgood or Mr. Corbett or I would be. I would be able to identify a picture of you whether I took it or not. There certainly ought not to be any question about it.

Mr. Richey: He said they are all the same. Look them over and if there is anything that ought not to be on there, you can point it out.

(Counsel looks at photographs.)

Q. Will you compare the Osgood machine, shown in Exhibits 29, 30 and 31, with the machines of the patents

in suit and the plaintiff's commercial machine, in structure, mode of operation and results? A. For the purpose of comparison I would refer His Honor to view No. 3. (Shown court.) Of Exhibit P-29; being one of the advertising catalogue or leaflet views in which there is a boom, the member bearing the word "Osgood," and which corresponds in function to the boom 2 of the first Downie patent; a ditcher stick corresponding to the member 11; a bridle corresponding to 16 of the patent; hoisting sheaves corresponding to the hoisting sheave 17 of the patent; a hoisting cable of multi-reeving corresponding to the hoisting cable 18 of the patent; a hauling cable attached by means of a pivoted bail to the side walls of the scoop and corresponding to the element 43 of the patent; a bottom pivotally attached to the scoop walls and corresponding to the element 25 of the patent; side rake teeth attached to the side walls of the scoop and overhanging the pivot bolts of the bottom and flared to cut side clearance and corresponding to teeth 27 of the patent. There are braces extending from the rear end of the scoop to an intermediate point in the length of the stick and corresponding to the braces 20 of the patent. The stick is pivoted to the outer extremity of the boom as in the patent, the pivotal point of the patent being numbered 6. The bridle is pivoted to the upper extremity of the stick at a point corresponding to the attachment point 15 of the patent. There is a sheave carried upon the boom of the Osgood machine corresponding to a similar sheave in the patent drawing. The operation of the machine is precisely similar to that of the plaintiff. It performs all of the functions of the same device in the same manner.

Q. Can you point out the parts that prevent the occurrence of the blind spot? A. Referring to the same view—

The Court: Referring to the same exhibit?

A. The same view of the same exhibit, yes.

The Court: All right.

A. View 3, Exhibit P-29. The bridle may be seen to be disaligned from the direction of the pull in the hoisting line. This indicates the functioning of the abutting device of the Osgood machine, and I refer to view B of P-30 for the specific structure employed by this defendant as one element of the heel device. The inner face of the Osgood stick carries a channel of which the flanges

face away from the machine and the sticks in operating arrangement and the upper extremities of the channel which passes underneath the stick pivot bearing which terminates at just such a point as to serve as a shoulder or ledge upon which the bridle, apparent in other views and corresponding to the bridle 16 of the patent, may and does contact as the device is elevated into the upper discharge range. In the views shown the channel may be seen to have been battered somewhat on the shoulder referred to. This has resulted from contact and functioning as an abutment. In the view 3 of P-29, the side of the channel to which I have just referred can be seen to terminate just underneath the bridle in the position there found. The bridle is resting upon the upper extremity of the channel and is preventing closer approach than is here shown by the bridle to the stick; in other words serving as a stop and preventing the angular approach of these elements. Any means for effecting this limitation of course performs the function of the patented device.

The Court: You say they infringe if they use a different construction to avoid this blind spot.

Mr. Richey: It is performing the same functions in the same way.

Mr. Corbett: If it did perform the same function but was substantially a different structure, do you maintain that would be an infringement?

Mr. Richey: Yes.

Mr. Corbett: You maintain that anything which performs the same function is an equivalent?

Mr. Richey: I would not answer a broad question of that kind. The range varies with the character of the invention. A pioneer invention is entitled to a wider range of equivalence. I would not want to answer the general question. I will answer this specific question.

Mr. Corbett: We are not even admitting it performs the same function.

The Court: As I get it the purpose of one of these inventions is to avoid this blind spot. My question to Mr. Richey is whether he has a monopoly on removing that blind spot regardless of the kind of construction.

Mr. Corbett: That is what I challenged him on.

The Court: He says that under the doctrine of equivalents he has.

Mr. Richey: As far as this case is concerned.

The Court: And that this particular construction comes within the range of equivalence to which he is entitled.

Mr. Richey: That is right. I am not answering the question beyond the scope of this case.

Q. Are those parts marked letters sheet No. 9, Exhibit 29? A. A number of these parts have been marked with reference letters.

Q. Are those parts preventing the blind spot shown in that view? A. The view is not very distinct. I will have to refer to something more distinct.

Q. All right. Do any of these views show the construction in the third Downie patent? Can you point that out? A. The views—

The Court: That is the assembly patent?

Mr. Richey: Yes.

Witness: The views of P-30, and particularly views C, D and E show the structure of the third Downie patent. In view C, a diagonally directed view from above the scoop which is lying upon the ground, the angles which form the feet or ledges of the ditcher stick may be seen, and the boltheads are apparent.

The Court: Two of them or one?

A. Two, by which the feet of the stick is attached to the overhead bail. The bail flanges are here apparent, the reinforcing structure of the bail consisting of two angles, of which the horizontal forks or legs meet at the mid-width of the bail. The bolt for tightening the two flanges into gripping relationship with the foot of the stick is apparent. The other views are substantially similar, except that view E shows more distinctly the two bolts used on each side for attaching the foot of the stick to the bail.

Some of these devices, links, bridle are straight, and others are angular. The functions are precisely the same. The bridle may be curved upwardly at its mid-length; it may be straight or it may be curved downwardly at its mid-length. The curvature, so far as the functioning for this purpose is concerned, is not material.

Q. With respect to the adoption by the plaintiff of the various inventions of the five patents in suit, when did each of these defendants begin its infringement—

Mr. Corbett: Objection. What constitutes infringement is a question for the court.

Q. Change that word "infringement"—begin the manufacture of the machine shown in Exhibits 25, 26, 27, 28, 29, 30 and 31—

Mr. Corbett: Objection.

Question cancelled.

Q. With respect to the adoption by the plaintiff of the various inventions of the five patents in suit, state, if you know, when each of the defendants began to manufacture the machines shown in these catalogues and photographs you have just been discussing?

Mr. Corbett: Objection. I question his right to assert the things in question are inventions and have been adopted by the defendant.

The Court: The only thing Mr. Richey is trying to get at is when did the defendants begin the types of construction which you have described and referred to in these various exhibits. That is what you want, Mr. Richey?

Mr. Richey: Yes.

The Court: Do you know when?

Witness: I have seen them for the past four or five years. I cannot state more definitely than that. It was some time prior to that.

Q. Go back to the time when you first saw the machines. State with respect to the time of the adoption of the inventions of the patents in suit by the plaintiff when those events occurred; that is, did you see them between the time the plaintiff adopted the inventions of the third and fourth Downie patents, or was it some other time?

Mr. Corbett: I think he ought to confine himself to the structure. The court determines what those inventions were.

Witness: In each instance in which I have seen infringing devices as here shown by the defendants, I have seen such devices after we had made and were using commercially the patent or the structure of the patent which defendants' machines infringed; that is to say, for example, the generous use of the bail patent.

Mr. Corbett: I object to this witness stating that these were infringing devices. That is a question for the court.

The Court: I quite understand that.

Mr. Richey: We apologize for that. What he means are the devices he has been discussing.

The Court: This witness thinks these are inventions and that your devices are infringements; but the court

has ultimately got to decide those questions. It does not make any difference what terms he uses.

(Narrative continued) Both defendants came on the market with their machines after the plaintiff had adopted the improvements of the Clutter patent and the first three Downie patents. With reference to the fourth Downie patent the General adopted the kind of a tooth shown in their machines subsequently to our adoption and commercial offering of them. I don't know the precise date. We began the use commercially of the form of tooth of the fourth Downie patent in January, 1925.

The Court: Up to that time you had seen no such device on any of the machines of either of the defendants?

Witness: That is correct, sir.

Q. Are you familiar with the machines of the defendant that were in the case of the plaintiff herein versus the Byers Machine Company? A. Yes, sir.

Q. There were three separate Byers machines in that case, were there not? A. That is right, sir.

Mr. Richey: I will offer in evidence three groups of photographs or photostats that were referred to by the witness, as Plaintiff's Exhibits P-29, P-30 and P-31.

(Consultation between court, counsel and the witness.)

Q. I show you three sets of photostats, marked P-32, P-33 and P-34. They show the first, second and third Byers machines, respectively, do they not? A. That is correct, sir.

Q. How did the operation and results of the first and second Byers machines compare with those of the General and the Osgood companies in this case? A. Their functioning was the same as that of the two defendants herein, in respect to all of the things which I have referred to previously; and all of the various elements: boom, stick, scoop, bottom, side rake teeth, bridle, abutment of bridle upon the stick limiting the approach of the bridle to the stick, elimination of the blind spot by such limitation of approach, the functioning of the hoisting lines and the hauling lines, and releasable latch for the bottom, momentum closure for the bottom.

Q. That is as far as the Clutter and the first two Downie patents are concerned? A. Yes, sir.

Q. And the third Byers machine operated and performed the same functions as the machine of the first Downie patent; that is correct, is it not? A. That is correct.

Q. None of these machines embodied the improvements in the third and fourth Downie patents? A. Correct.

Q. They came on the market before the plaintiff adopted the improvements to the third and fourth Downie patents? A. Yes, sir.

Mr. Richey: I offer them in evidence, Plaintiff's Exhibits Nos. P-32, P-33, and P-34.

Mr. Corbett: You have offered them as part of the record of the Byers case.

Mr. Richey: No, they were not in the record; they went up as physical exhibits.

Mr. Corbett: We wish to reserve an objection to each of those exhibits.

The Court: All right. They will be admitted without prejudice to your making any objection to them later if you see fit to do so.

(Narrative continued.) The chief commercial method of trench excavation and cellar digging in use at the time the Clutter machine was marketed by plaintiff was hand work. Another method of trench excavation was that which we have referred to as the multi-bucket method; that is a machine in which a series of buckets passes up along the face of the excavation, the buckets being carried either by an endless chain or a large structural wheel carrying the material to the surface of the ground, and by discharging by inversion of the buckets, and the spoil being carried laterally by means of a conveyor belt.

A third method employed at that time was the forward or outward arc scoop as carried upon dipper sticks of the type that has been called either forward arc or regular steam shovel bucket, and as adopted for trench work by the use of extraordinarily long dipper sticks, so that the machine could be placed upon bridge mats over the open trench, and could thereby reach down into a trench, into moderate depths at least, and excavate by the forward thrust of the scoop, bringing the load to the surface and revolving laterally and discharging upon a spoil pile, or turn the full half circle and discharging upon the laid conduit sewer line or water line.

Another method for below grade excavation was that which has been described here and called the drag line, in

which an integral bucket is carried at the end of a hoisting cable which extends over the end of a boom, the bucket being usually somewhere beyond the plumb position, and dragged toward the machine by a hauling line, the scoop being so proportioned as to ride upon its underface or side, gathering material in its passage; being then elevated by its hoisting cable and swung laterally for discharge, discharge being effected by release of all tension upon the hauling line. This method was used, is still used, in large open ditch work to ground deposit, that is, it is not suitable except at prohibitive care for loading ordinary size conveyances.

Another method which was coming into some use for certain kind of trenching just about the time of the Clutter advent, or shortly thereafter, was the clam-shell, which is suited for excavating soft materials and is economical to use only at relatively greater depths than these other devices can attain. For instance, trenches 25, 30 or 40 feet deep, in soft material and requiring to be shored up to prevent cave-in indicate the use of the clam-shell scoop. Sometimes the material is loosened by picks in the hands of workmen.

Q. They just drop the bucket down and bring it up? A. Yes, sir.

Q. You did not dig any rock at the demonstration this morning? A. No, sir.

Q. Why was that? A. There was no rock available, and so far as we could find by investigation, there was no suitable place where we could dig shale.

Q. Have you a moving picture of this machine digging a hard substance? A. We have a moving picture of a machine digging at our testing grounds at Beaver Falls, upon a very large slab of hard concrete, and in which we strike a gravity blow.

Q. How does that compare with rock? A. It is extremely hard. This testing block we have is chosen especially for that purpose and it is harder than any commercial rock that we encounter, except the trap rock of the Jersey coast, and, of course, granite is harder. But it is in the class of extremely hard materials.

Mr. Richey: If your Honor please, we should like to show that picture. It will take about three minutes to set the apparatus up.

Mr. Corbett: We would like to know whether the witness took the picture. We cannot tell from the pic-

ture what kind of ground was being dug. Is he going to testify to that?

Q. You saw the picture taken? A. I took part of the picture and gave instructions for the taking of the rest of it.

Q. The fact is you are shown in the picture? A. I believe I appear in the picture at one point.

Mr. Corbett: We object to the picture.

The Court: Overruled. Save your exception: Set up the machine.

(Thereupon a certain moving picture film was screened for the court.)

Mr. Richey: I will offer the film in evidence as Plaintiff's Exhibit P-35.

Mr. Corbett: I want to object to the introduction of that movie in evidence for several reasons. One reason is, it is not shown that that machine is the machine of the patent in suit. The second reason; there is no clear way of determining the nature of the ground being operated on.

The Court: Well there is testimony here as to that latter point. As to the machine, is there any evidence about that?

Mr. Richey: I will ask him.

Q. What kind of machine was that, Mr. Downie, used in the moving picture film which I have offered in evidence as Plaintiff's Exhibit P-35? A. The machine there was just like the machine which was demonstrated this morning except in the movie the scoop was wider than this scoop.

Mr. Corbett: Objection on the ground that this is a different machine from the machine of these patents.

The Court: That will go to your main case.

Mr. Corbett: We are just offering that objection.

The Court: The objection is overruled.

Mr. Richey: That is all of the direct examination.

Cross Examination by Mr. Corbett.

I am thirty-six years old. I worked intermittently for the Keystone Driller Company from the years 1912 to 1919; that is, to the latter part of 1919. That would make me in the neighborhood of about eighteen when I first went there. By intermittently, I meant that I worked during Summer vacations. I was in school then.

When I first went there I was in Geneva College, Beaver Falls; and at the University of Pennsylvania in the years 1916 and 1917. I worked at the Keystone Driller Company approximately three months of the year. As to the nature of the college work I took, the first years mathematics and trigonometry, and so far as bearing upon engineering work was concerned, general English courses, general science, languages. At Geneva, I believe I took two terms of geology. I did not take engineering either in College or at Pennsylvania.

Q. You have spoken of various features and functions of these various machines. I wish you would refer to the LeRoy Clutter patent in suit and point out anything in the claims or specification of this patent which indicates that the machine had the function of digging rock?

Mr. Richey: Your Honor, we did not ask this witness about the claims; interpretation of the claims is a function of the court, the same as the interpretation of counts of an indictment. This witness is a mechanical engineer, not a patent expert.

The Court: What you are going to develop is that these claims do not refer—

Mr. Corbett: I am not asking him to interpret claims. I want him to point out some thing there that covers rock digging.

The Court: It is conceded they do not; and the Court of Appeals says it does not make any difference whether they do or not.

Mr. Corbett: I do not so understand it, Your Honor.

The Court: That is the way I understand the decision. Let us look at it. That was a surprise to me; that is the reason I noticed it.

Mr. Corbett: I think the rule, Your Honor, is it either must refer to the claims and specification or be inherent in the machine.

The Court: The Court of Appeals has said something on the subject. (Court refers to case.)

Mr. Richey: That is the established practice.

The Court: "This Court has held that the patentee is entitled to the benefit of every invention within the scope of the claims and actually possessed by his mechanism, even if he does note it at the time of patenting."

Mr. Corbett: He must show, however, that if the matter is not disclosed in his specification or claims that it is inherent in the machine.

The Court: Well, I am reading that to you. If you want to pursue it in view of what the Circuit Court of Appeals said, go ahead.

Mr. Corbett: I would like to raise that question, to some extent.

Question read.

The Court: Referring specifically to claim 4 of the Clutter patent?

Mr. Corbett: I told him any claims or the specification. Of course claim 4 is the one sued on.

The Court: All right. You are asking as to any of the claims.

Mr. Corbett: Anything in the patent that describes them.

The Court: All right.

Witness: (Refers to patent) As to reference to the work of rock digging, I do not find such reference in the specification or the claims; but the structure of the machine as shown possesses the ability to pick rock, as has been demonstrated with the model here offered, and as I can again demonstrate if you desire.

Mr. Corbett: We think it is unnecessary for him to go talking about the model. Just confine yourself to the machine.

Witness: That then completes my answer.

Q. It is your claim, is it, that the machine of the LeRoy Clutter patent will dig rock? A. Yes, sir.

Q. What kind of rock? A. We do not undertake to dig solid rock of the class of good hard sandstone, nor anything of equivalent hardness. There are other rocks which are still harder which we cannot dig commercially; but rocky ground which is too hard to dig without the gravity blow can be, and I have frequently dug it with the Clutter machine by means of the gravity blow as a mode of attack.

(Narrative continued.) My actual operation of steam shovels, I believe, has been between fifteen and twenty machines, which I have demonstrated. I am an operator of shovels, and have worked by the day, operating shovels. I was employed in fifteen to twenty demonstrations. By demonstration, I mean approximately one week's demonstration of a machine as is commercially done by our companies. I ran a machine day in and day out a week or two weeks. I don't think I worked

over three weeks on one machine—that in Halifax, in 1929.

The Court: For the purpose of selling?

Witness: Demonstrating its performance as advertised; and at the conclusion of the demonstration to settle up for the machine and break in the other operator, teach him the duties of operation and repair; in other words, the final contact of the company with the customer.

(Narrative continued.) My digging experience has been in various parts of the country. In a sense, picking and the gravity blow are the same; that is, the gravity blow is used in order to pick. The picking is the result of the blow, the mode of operation. The gravity blow is a complete dropping of the shovel scoop. As I explained yesterday, the gravity blow is primarily developed from the force of gravity acting upon the scoop, and, to some extent, upon the weight of the stick. It is augmented practically and its effectiveness heightened by a coordinate manipulation of the hauling line, which I have illustrated, whereby the hauling line, due to the inner alignment of the stick, at the instant just before the blow is struck has a speed advantage over the scoop. A one-inch retraction of the hauling line will cause an eight-inch fall of the scoop in a like interval; and since this speed is equal to and usually in excess of the acceleration due to gravity alone, it accumulates with the effect of gravity in causing the impact of the scoop. I mean by gravity blow both of these things.

Q. Can you tell us without so much language? Do you actually take the scoop, in striking this gravity blow you speak of, and drop it without any support from the hoisting line? Let us be simple about it. Do not let us have so much language, if we can avoid it. I want to get this clear in the court's mind. A. I have stated a number of times that the scoop is dropped.

Q. You let the hoisting line absolutely free? A. Certainly.

Q. And permit the scoop to drop? A. Certainly.

Q. And that is your contention about the way to strike a gravity blow, is that right? A. As I have stated previously.

Q. Are you sure of that? A. Positive.

The Court: You give some slack and that causes that to drop?

Witness: That is right, sir.

Q. How far do you let it drop? What is a fair average drop of the scoop? A. You let it fall until it has acquired some velocity.

The Court: How many feet high is it when it starts?

Witness. Anywhere from 4 to 10 feet. Of course any height down from zero up to 10 feet. Sometimes one will strike a short jabbing blow, 1 foot drop; sometimes 3 feet; sometimes 10 feet.

Q. Did you ever do that? A. Yes, sir.

Q. Day in and day out? A. No, sir. That is not commercial. I am stating the extremes for purposes of illustration.

Q. What is commercial? A. Commercially a 3 or 4 foot drop is usual.

Q. During that three or four foot drop, it drops freely without any restraint from the hoisting line? A. The scoop drops not only freely but is accelerated by the manipulation of the hauling line which I have explained.

Q. But it is not supported by the hoisting line and it has the weight of the boom added to it? A. No, sir. You apparently have not understood my previous explanation.

Q. Is the stick added to it? A. I said the scoop and a portion of the weight of the stick enter as a weight factor in the gravity blow. The boom weight does not enter the gravity blow as a factor.

Q. But that portion of the weight of the stick and the whole weight of the scoop is not restrained by the— A. Retention of the hoisting line; that is correct.

Q. How much have you ever done that, Mr. Downie? A. One does not operate that way regularly. I have used it when I had occasion to.

Q. What do you mean: does not operate that way regularly? A. If the material is sufficiently soft that it can be dug, as this material was today, without using the blow, one does not employ it. In the ordinary course of operation one digs by the ordinary slow motion method.

(Narrative continued.) The gravity blow is not the ordinary slow motion method for soft materials. When-

ever the material is so hard as to not be readily diggable by the normal passage of the scoop through the material, then the material may be fractured at will and to whatever extent necessary by the operator by means of a gravity blow. This type of material would be shale and materials of corresponding or equivalent hardness. It is not customary to use the gravity blow continuously in digging shale but it is used more for the purpose of getting an entry to a stratum rather than for the actual fracturing of all the material removed. It will be understood that once a stratum has been entered or penetrated, it is easier to continue operation especially with this latest form of tooth, than to enter in the first place. The gravity blow is in some sense an initial operation to get down to the floors, and can be utilized later if and when necessary.

When digging in shale, it occurs in various thicknesses; more usually shale is encountered five or ten feet below the surface, than right at the surface. Usually there is soft material at the surface of the ground. I don't believe there is any regularity in the occurrence of shales under the surface of the ground.

Q. You speak of the initial operation of dropping: that does not mean the first blow; that you have a gravity blow your first blow, and then all of the rest of the blows are not gravity blows? A. An operator will, upon encountering shale, first endeavor to dig it by the normal digging method. If the shale is soft, he may be able to execute it with the normal or slow motion method. Failing in that he will strike a relatively short blow, and can increase the force of the blow at will, to fracture it and get down.

Q. And that was quite frequently done in the Clutter device, is that right? A. Yes, sir.

Q. In the Clutter patent, on page 1, beginning on line 10, it begins a description of operation, and the matter I want to direct your attention to and the court's attention to, reads as follows: "In the operation, assuming the device to be in the position shown in Figure 1, the pulling member 21 is gradually released, lowering the boom until the scoop 3 is in contact with the material to be removed." And then it goes on. You do not find anything in that description which indicates a gravity blow, do you? A. As I stated previously, there is nothing in that description alluding to the gravity blow.

Q. That indicates that the shovel is operated with a gradual release of the hoisting line? A. That is the method described there.

Q. And in the operation of this LeRoy Clutter shovel, it was the practice in closing the scoop to—we will say the scoop is pivoted and hanging down after the dumping operation? A. Yes, sir.

Q. Now it was the practice to place the point of that scoop on the ground, and then let the stick drop so as to close that scoop, was it not? A. It was possible to close the scoop in that way; but the usual method of operation was simply a slight restraint on the hauling line as the scoop reached out, and this slight restraint just put the scoop into closed position; and then restraining the stick.

Q. Evidently Clutter did not think so. He says on Line 10, Page 2, as follows: "The point of the scoop 3 coming in contact with the material will cause the pin 5 to slide to the top of the slot 16A and engage with the latch member 8"—is it not? A. That is correct. It will do so.

Q. Now in the Byers case you testified at the bottom of page 60 and the top of page 61, in answer to the question, about how hard a blow can you hit with these scoops; you said, "Depending upon the height to which the scoop is elevated. The common force of blow, the impact struck in this gravity blow would be three or four or five thousand pounds of energy, being simply arrived at from the factors of the weight of the scoop and distance through which it falls; the one multiplied by the other; and the scoop in our commercial construction weighs anywhere from 750 pounds, in our very narrow models, to 2000 pounds, in our extremely wide models; but a thousand pounds is a fair average weight, and four feet of fall is a fair average drop; and the foot-pound measurement of the blow is arrived at as simply a product of the different factors"; is that correct? A. That is correct.

Q. But that is not the usual thing in the operation of these shovels, is that not correct; do you strike a blow of that nature? A. We strike a blow of much greater severity than that; we did so in this movie.

Q. You will admit that it is usual not to strike a gravity blow; in fact if you strike a gravity blow at all it is only an exceptional mode of operation? A. That is the mode of attack used when needed, according to the hardness of the material.

The Court: In a particular job you might have to use both kinds of operation?

Witness: That is right, sir.

The Court: You can never tell when you are going to strike a hard substance?

Witness: That is correct.

Q. But it is exceptional that you do have to use that gravity blow? A. On certain jobs the gravity blow—

Q. Answer the question: is it not exceptional? A. I am answering the question.

Q. Is it or is it not exceptional? A. That depends upon one's definition of what is exceptional.

Q. If you want to hedge about the matter, that is all right; but in the vast majority of jobs you do not strike this gravity blow, will you not say so? A. In the majority of jobs it is not necessary, if that is a satisfactory definition.

Q. And I think that that gravity blow that you claim to be used in this Keystone shovel only occurs at a certain portion of the digging stroke, is that right? A. That is correct.

(Narrative continued.) The gravity blow occurs at or close to the full outreach. The gravity blow, in other words, is not available to the operator at the inner two-thirds or three-fourths of the travel of the scoop. By full outreach, I mean the outreaching position of the device. That is the position in which the stick is in alignment or near alignment with the boom, whether the boom be horizontal or sloping diagonally downward into the open trench. It is alignment of the stick and boom which is important, rather than that the boom should be in horizontal position. Sometimes one says the horizontal position, meaning alignment.

Q. You had a different degree of outreach in your Clutter structure, with the upstanding link, from the degree of outreach in your Downie structure, without the upstanding link?—Does Your Honor understand that?

The Court: I am just trying to see if I follow.

Mr. Corbett: It refers to an upstanding support in the Clutter patent. The first Downie patent and the subsequent patents do not have that upstanding support. (Drawing exhibited to court.) There is no upstanding support to the sheave; that is one distinction between the two structures.

Witness: Now may I have the question read, please?

Question read.

Witness: I must ask what is meant by what degree of outreach. It is not a matter of angular measurement; outreach is a matter of distance.

Q. The matter of distance as I understand depends upon the length of the boom and stick? A. Yes, sir.

Q. Suppose you explain what you mean by outreach? A. As I explained a few moments ago, outreach is that position wherein the device is reaching out as far as it is capable.

The Court: Illustrate with this miniature. There is a certain point there where you could not strike a gravity blow at all?

A. That is correct, sir.

Q. This is the Downie device, is it not? A. This is the Downie device.

(Narrative continued.) The boom on the model is made an inch to the foot with the commercial machine, but not with the patent. They all come within and are approximately the same as the patent illustrations; but in both of these machines we have followed the commercial structure as to the stick and scoop and boom. Of course this is not the commercial rig up here.

Mr. Richey: That is the hand wheel part?

Witness: The hand wheel part, to enable hand operation.

(Narrative continued.) As to the outreach, both devices reach as far as their dimensions will permit. If their dimensions are the same, that is, the dimensions of the boom and the dimensions of the stick are the same, and the length of the lower arm of the stick, that is, the arm below the pivotal connection, you will be able to get the scoop of the Clutter structure out substantially the same as with the Downie structure. By the word "substantially," I mean substantially to the point where the teeth are pointing vertically or nearly vertically downward, that is, sufficiently close to the vertical to strike an effective blow.

I demonstrated a machine this morning which is one of our latest models. In that device, when you reach out to the fullest extent, the outer end of the stick, the scoop end of the stick may be caused to go up higher than the

pivotal connection between the boom and the stick, or it can be prevented from doing so at the will of the operator. This could not be done with the Clutter device.

Q. Then it cannot reach out as far in the Clutter device? A. It can reach as far in the Clutter device.

Q. It can? A. It can.

Mr. Corbett: Maybe I am dumb but I do not get this.

The Court: If you get up a certain height it will not reach out?

Witness: Precisely correct.

Q. I would like to have Mr. Downie explain, with this support tying down this link, how he can get this scoop—

The Court: He can get it straight out.

Q. Can you get it straight out? A. It is substantially straight out. I don't know to the inch that it would total the length of the beam and the length of the stick; but it is ample for the striking of this blow and I know, of course, has been used for a great many years.

Mr. Corbett: It is not a question whether it is ample; it is a question whether it is different; that is what I am trying to get at.

The Court: Could you get that stick out precisely horizontal from the ground?

Witness: Yes, sir.

The Court: If that is so, that is as far as it will ever go.

Q. You can do that during the operation of the boom in the air?—I don't mean by putting the point of the scoop down on the ground and letting it drop down; but in the actual use of the machine? A. No, sir, the stick will not quite attain to the limit of the boom in the Clutter device, nor this device, in mid-air, unless you bring in motions, and, as I have said, the outward swing of the stick and momentum made use of, and the boom allowed to fall leading the descent of the stick and the scoop; or it may be checked and the scoop allowed to lead the descent of the boom.

(Narrative continued.) I cannot at the moment refer to any catalogue which describes the operation or shows the structure of the Clutter device, the upstanding support member, as to the advantages of digging or

rock digging. I will search our earlier catalogues for such references.

Q. Now leaving the Clutter structure for a moment and going to your stop patent structure which is known as the Downie patent No. 2, No. 1,543,250, I think you testified in the Byers suit in substance that the question as to whether or not these stops or abutments or heel pieces—have you the patent here? A. Yes, sir, I have the patent to which you refer.

Q. Which are designated 23? A. Yes, sir.

Q. In the drawings in this patent you testify that your ditcher stick is divided theoretically into the arm below the pivot and the arm above the pivot, and that of course the arm below the pivot is very much longer than the arm above the pivot, is that right? A. That is right, sir, as I understand your question.

Mr. Corbett: Do you understand, Your Honor?

The Court: Yes, I think so. That is a theoretical division of that stick?

Mr. Corbett: Yes.

Q. And you testified in the Byers suit, did you not, substantially—I will refer you to your exact words if you want—that as your company and as you saw the matter, there was a continual conflict between the hoisting line which pulled upon the upper end of the stick and the hauling line which pulled upon the scoop; is that right? A. Not a continual conflict.

Q. Well, a conflict during the digging operation. Just say that briefly? A. A conflict or antagonism occurring whenever the boom is being supported by power, and the bucket hauled and its engagement maintained by hauling line power; there is an antagonism present between the two lines.

Q. And because of what you conceive to be that antagonism, you thought and your company thought that it was highly important to maintain the upper arm of that stick at a minimum length, is that right? A. That is desirable in our construction.

Q. And in order to maintain that minimum length, and in order to avoid this so-called blind spot, you put these stops on there, is that right? A. That is the utility of the stops, correct.

Q. If you had wanted to disregard that question of conflict of the hauling line and the hoisting line, you could have made that upper arm of the stick longer in

proportion to the lower arm of the stick, is that not correct? A. If one desired to make the upper end of the stick longer, it could be done. There is not structural difficulty about using longer channels.

Q. And if you made it long enough you could avoid the use of the stops, and at the same time avoid the blind spot, is that not right? A. Not with the correct direction of length of the arm, which is represented by a line drawn from the pivot 7 to the pivot 14; but the modification which you are proposing would swing that arm farther toward the machine; that is in the counter-clockwise direction in Figure 1.

Q. Which arm? A. Of that patent; the arm is represented by a line drawn—

Q. That is the upper arm? A. It is the line extending upwardly from the stick pivot, from the point 7 to the point 14. We desire that that arm be kept leaning forwardly so as to get the best and most advantageous outreach of the stick when in the lower phases of operation.

Q. That was your idea, was it not? A. Yes, sir.

Q. But that does not answer the question. If you had wanted to you could have made that arm long enough in proportion to the lower arm of the stick that you would not have that blind spot, is that not right? A. We could have made it longer, but not without sacrificing in the digging operation.

Q. But suppose you wanted to sacrifice in the digging operation, you could have made it longer, could you not, and have gotten away from that blind spot?

The Court: What you are trying to develop is that the blind spot comes on the particular place where this pivot is?

Mr. Corbett: Because he has a short upper arm; that is a fact, is it not?

Witness: That is a desirable thing.

The Court: He is trying to get at a fact now; not the desirability of it. Ask him again.

Witness: I believe I have the substance of Mr. Corbett's question. The upper arm could be made long enough if one disregarded these things which I have just said—the disadvantage of it—so that the blind spot would not occur before the teeth struck the boom. It would be possible to make the construction.

Q. Yes, I thought you would agree to that. Now as a matter of fact what you did when you put those

stops in there, you maintained your short upper arm, but in a certain elevation of your boom; you made your line—when you got it up as in the pictures in the Byers case—you made your line come in from a higher plane, is that not right; in other words you got a bend in the hoisting line? A. In the hoisting line.

Q. That is the line including the link? A. That is right.

Q. That is what you did? A. That is right.

Q. And that was for the purpose of keeping—I would like to have Your Honor follow this—the pivot 14—that is on Figure 1—

The Court: Yes, I understand.

Q. The pivot 7, which connects the boom to the ditcher stick and the pin 17 away from too close approach to alignment, is that not right? A. The three points which you have named cannot approach alignment any closer than they are in Figure 1. They of course form a firm structure when they are in this relationship.

Q. But what I am saying is you put those stops in there so those three points could not approach alignment too closely? A. That incidentally results; that was not the object.

Q. What was the object? A. The object was, stated generally, to maintain a force upon the upper end of the stick sufficiently to cause out-thrust in the foot of the stick; or, more specifically, to prevent the pivot 7 from intersecting the line of pull of the hoisting line extended.

Q. Well it was a question of approaching alignment of those points there you were trying to get away from, because if these points got too close to alignment, you had what you call a blind spot and could not control your range of dumping; that is your theory, is it not? A. That is substantially correct, as I understand it.

Q. If you lengthened the upper arm of that stick, and in addition to that if you raised the point at which the hoisting line 22 leaves the upper front of the machine, you can use both of those means to get away from that blind spot, is that not right?—Do you follow that, Your Honor?

The Court: Yes.

Witness: The height of the machine from the pivot of the boom 5 to the point midway between the two or however many reaches of the hoisting line enters the

calculation of the cable load and thereby enters the calculation of the upward turning movement upon the head of the stick. In a general way what you say is correct.

Q. It is an obvious thing, to reduce it to a simple proposition, if you do not want that blind spot there, you could increase the long upper arm, and you could increase the height or raise the point at which your hoisting line leaves the machine and entirely avoid that blind spot, is that not right? A. If the upper arm be lengthened sufficiently that the pivot 7 will not enter the line of the pull of the hoisting line, then the blind spot doesn't occur.

Q. In the Byers suit you called these abutments heels? A. Yes, sir.

Q. You sometimes call them heels, do you not? A. Yes, sir, we have referred to them by that name.

Q. You gave a demonstration there—have you got those pictures?

The Court: Are these the pictures you want?

Mr. Siggers: Here they are.

Witness: Are these what you wish, Mr. Corbett?

Mr. Corbett: Yes, but I would like to have a copy of them.

(Narrative continued.) I haven't examined the earlier Clutter catalogues to see if these catalogues showed rock digging or gravity fall. I will endeavor to locate anything of that kind that I can. I don't know whether it is in them or not. I wouldn't be certain as to that. I am not so clear as to the contents of the catalogues that I could state fully the practice at the time. As to whether the machine demonstrated by us today had any features not present in the patents in suit I will say I am not aware of any functions in the machine shown today which are not present in the patents in suit. Not if you mean by "features" the functional features, or do you mean some details of design?

Q. Would you say that the electric trip or the latch was a different functional feature? A. Not as to the d gging of the scoop at all.

Q. But anyhow that is a feature that is present that is not shown in any of your patents; that is right, isn't it? A. The machine today carried the electric trip, which is not shown in any machines of the patents, yes, sir.

Q. How long have you been manufacturing that electric trip?

The Court: Where is that electric trip?

Witness: Back of the ditcher stick. Well, it has a motor—just a moment, I will show it to you.

Mr. Corbett: What is the number of this Exhibit?

Mr. Richey: I think Mr. Edgerton can tell you.

Mr. Corbett: The machine is somewhat similar to the machine shown on the outside of Plaintiff's Exhibit P-24, and I might refer to the lower part,—this section here. (Indicating.)

The Court: Well, where is the electric trip?

Mr. Corbett: I think this is it up here, isn't it, Mr. Downie?

Witness: That is right, sir.

The Court: Where is that,—right up here?

Witness: It is placed right there; here is a small electric motor.

The Court: Any patent on that?

Witness: It bears a patent on the electric trip as a whole, as a thing apart from the ditcher, but that is not here in suit.

The Court: Who has the patent on that?

Witness: Keystone Driller Company.

Q. How long have you been using this electric trip? A. About five years; four or five.

Q. In a large percentage of the machines which are in use the bottom is tripped by hand, isn't it? A. Yes. Formerly, of course, the tripping was done by hand, but lately, and especially if the contractor is regularly using the bottom dump method of discharge, there is an increase in preference for the electric trip.

Q. So when you speak of this two-line control, it is clear that you are not speaking of or not counting the fact that in the majority of Keystone machines one man stands on the ground and pulls a cord to operate the tripping latch to trip the bottom; that is right, isn't it? A. Yes, sir, the two lines I have referred to in no case, except where I say so, refer to the tripping line. And the tripping line, in other words, would always make a third line. That is, I think, what you have reference to.

Q. Now, this is the first model, isn't it, in which you have had a full revolving shovel? A. Yes, sir.

Mr. Corbett: Do you understand that, Your Honor?

The Court: No, I don't.

Q. Will you explain to the Court the difference between your former machine and this full revolving machine? A. Yes, sir. Referring to Plaintiff's Exhibit P-18, for example, and to page 2 thereof, there is shown a machine with boom and stick. The machine is of the type called the non-revolving machine, referring to the fact that the body does not itself revolve when—

The Court: Well, this machine that you had today revolved with the boom.

Witness: That is correct.

Mr. Corbett: It has a cab, or rather a tractor and a cab on that.

Q. It is turned by a gear; is that right? A. That is right. The defendant's structure revolves sidewise a certain degree, whereas in the machine shown today the entire body here revolves upon a suitable structure on the ground mounting for the side swinging.

Q. Now, so that the Court may have the matter clear,—which may have some bearing here—one of the distinguishing features of the full revolving shovel is that the revolving cab carries the boom and the ditcher stick and may be swung to any position around the circle, 360 degrees, for either in front of itself, to the side of itself, or back of the tractor,—any place; is that right? A. Yes, sir.

Q. And your machine previous to this model had how much,—about 180 degrees? A. About 180 degrees of swing.

Q. And in this machine that you had today, for instance in the operation such as undercutting, you would have a great deal more power in swinging the upper end of the boom, the upper end of the stick, than you would in your old machine; isn't that right? A. No, sir.

Q. Are you sure of that? A. Yes, sir.

The Court: Power for what purpose?

Mr. Corbett: Canting the stick to effect the so-called undercutting.

Witness: I can explain that more fully, if you desire.

Q. Now, this full revolving shovel, of course, has been in use for quite a while, a number of years, by other companies. That is true, isn't it? A. Yes, sir.

Q. Well now, in this scoop that you used today, you demonstrated what you call rooting; is that right? A. Yes, sir.

Q. And it is a fact, isn't it, that the side rake teeth on that scoop used today extend down so that their bottom is practically in the same plane with the bottom of the other teeth of the scoop? A. With the tips of the other teeth, yes, sir.

Q. Well now, will you show the Court just how far —well, have you got a picture of that? A. There should be a view in the exhibits showing the revolving machine.

The Court: Well, when the bottom of the scoop is in place they are practically in alignment, aren't they?

Mr. Corbett: Yes, practically in alignment. Well then, Your Honor, you remember that?

The Court: Yes, I remember that distinctly.

Q. Now that tooth,—that side rake tooth which you had used on there, is that tooth shown in the fourth Downie patent and which has been withdrawn against the Osgood Company? A. It isn't the exact shape of tooth, but it is substantially the same.

Mr. Corbett: Have you got a picture of that tooth, Mr. Richey?

Mr. Richey: Why, there is one, I think, in that pamphlet that you just had,—Exhibit 24, was it?

The Court: Yes; P-24.

Mr. Richey: Is it shown in there?

Mr. Corbett: It doesn't show it very clearly.

Mr. Richey: I think that is it.

Mr. Corbett: Well, we will go on with that.

Mr. Richey: I don't know,—we may have a better view of that.

The Court: I can see it here. I don't know whether it is clear enough for Mr. Corbett's purpose.

Mr. Corbett: Here is a good view of it, in Exhibit 21.

The Court: Exhibit 21?

Mr. Richey: Yes, sir.

The Court: Yes; right under the one that has 1927 pull scoop.

Mr. Richey: Ask him about it. See if that is the right one; I don't know whether it is or not.

Q. Mr. Downie, I am talking about this side rake tooth; this is the one? A. Yes, this is a side rake tooth on what we call our 425; not the one that you saw today, however.

The Court: This is different?

Witness: Yes, this is different.

The Court: In what respect?

Witness: The tooth edge is slightly curved in this way, so that it would produce a slight troughing in the floor of the trench, whereas in the machine you saw today the floor of the trench will be flat.

Q. Have you a patent on this that you used on there?

Mr. Richey: I object to that as immaterial.

The Court: I don't think that one question will hurt you.

A. We have no application on file at this date.

Q. You think it amounts to invention, do you?

Mr. Richey: I object.

A. It is a matter for counsel to determine. I have no opinion on that.

The Court: One war at a time.

Q. What is this model, Mr. Downie? Has it a number? A. Model 17, this machine you saw today.

Q. How many of those machines about have you put out? A. I believe four or five; something of the kind.

Q. Now, I notice that there are several differences between the machine demonstrated out there, and the machine shown in this Exhibit, Plaintiff's Exhibit 24. For one thing, there seems to be in the machine demonstrated what appear to be two stops on the inner side of the ditcher stick; that is, that side nearest the boom. What is the purpose of these stops? A. The purpose of that is to limit the approach of the stick to the boom.

Q. What for? A. In order to prevent straining the hauling line wedge socket into the sheave located upon the boom.

The Court: Is that what you referred to as the bridge out there today?

Witness: No, it is not located on this here, but located in approximately this position on the machine that Your Honor saw there. It has two prongs—

Q. Is this it? A. Yes, this illustrates the approximate position of the structure referred to.

Mr. Corbett: Now, I want to identify that.

Q. Did you have trouble with the bending of those links on the top of the stick that caused you to put these stops, or either of them, in? A. No, sir.

Q. Or breaking of the links? A. No, sir.

Q. Well, you first put this machine out without them. Why did you decide you needed them? A. We put them on to prevent the bail from being strained from the inner side of the boom, the bail on the top, and to prevent the wedge socket there necessary for commercial use, and to stand the power of this machine from being strained up into that sheave.

Q. It isn't quite clear to me how the bail—I understand the bail that you are talking about now is the hauling bail? A. That is right.

Q. That is connected with the front of the scoop?

Mr. Corbett: This is the bail he is talking about. Now I call that to Your Honor's attention, because he has got another bail that sets up here (indicating).

The Court: This is the hauling bail?

Witness: This is the hauling bail. The matter to which I have referred is this. The part I am indicating, the wedge socket, formerly was drawn up into the boom to such a point that it contacted upon that sheave before this bail struck the under side of the—

The Court: Well now, you want this in the record, don't you?

Mr. Richey: I don't care anything about it, Your Honor.

The Court: Well, somebody will want it in the record, and you haven't got it in here now.

Mr. Corbett: We would like to identify this sketch, and perhaps I will have him put some humerals on there, —Defendant's Exhibit 61 for identification.

The Court: All right.

Q. Will you take this sketch, which is marked Defendant's Exhibit 61 and place on it numerals and lines indicating the two stops on the inner surface of the ditcher stick, designating the first stop A and the second stop B, and then tell what they do? A. There is on the machine we saw this morning a stop which I am numbering 1.

Mr. Richey: What does this sketch show? What does it represent,—any machines we have been talking about?

Mr. Corbett: Well, it is a rough sketch of the machine you demonstrated out there this morning.

Mr. Richey: Well, I don't know; if it is, you better prove it. I object to the question as immaterial until he shows it.

Mr. Corbett: You haven't put in any picture of your machine out there that is complete, and we are just trying to get a full view of the machine.

The Court: Is this an accurate representation, so far as it goes, of the machine as it was demonstrated today?

Witness: It represents the machine, recognizable to me. I don't remember the dimensions accurately; but it is recognizable to me.

Mr. Corbett: I just want to get the differences between your machine and the catalogue; I want to get what those differences are.

The Court: Well, in that connection, Mr. Downie, you said that was model 17 out there.

Witness: Yes, sir.

The Court: And the picture, and Exhibit P-24, are also what seem to be model 17?

Witness: Yes, sir. The one is with the ditcher attachment; the other is with what is called the skimmer attachment, but the model number refers to the basic machine, that is, the structure comprising ground mounting and the revolving cab, power plant, and so forth.

Q. In other words, you sold the machine equipped with a skimmer scoop, a skimmer attachment, and a backboard attachment; is that right? A. That is right; or a crane, boom for clamshell or dragline. The second stop illustrated on the sketch presented to me I am marking 2.

The Court: That is Exhibit what?

Mr. Corbett: Defendant's Exhibit 61, marked for identification.

Q. What is the purpose of the stop 2? A. The purpose of the stop 2 is to serve for a contact with the hauling bail when in the outreaching position, and when the bail is sometimes caused to strike rather heavily against the stick.

Q. Are there any other changes present in the machine demonstrated from the machine of this catalogue Exhibit P-24? A. I do not know of any other details, except one that I have mentioned,—the fact that the scoop is of a little different width, I believe, from the views in that bulletin.

Q. And you have changed the shape of the side rake tooth? Is that right? A. No, sir; the side rake tooth is the same.

Q. But the side rake tooth is different from the side rake tooth of Downie patent No. 1,716,432; is that right? A. That is the fourth Downie patent?

Q. Yes. A. Substantially the same. The dimensions are not the same. The two teeth are not interchangeable on the same scoop and with the same bolts. We have lengthened the distance from the bottom pivot to the bail pivot since it is a larger scoop.

Q. Well, you are speaking of the scoop. A. Yes, sir; the ditcher scoop of the model 17 is larger than the scoop which was offered commercially at the time this patent drawing was made.

Q. Yes, but I am talking about the side rake tooth. A. Yes, sir.

Q. That is different from the tooth on this model 17. It is different from the tooth of the fourth Downie patent; is that right? A. No, sir, I don't believe it can be said to be different, unless I have a better definition of what difference means. The function of it is the same, and the two forms of tooth, that is, our commercial form prior to that used on the model 17, and the form shown in the patent and the form of tooth used on the model 17 are all so closely alike that unless one measured very closely they wouldn't know that they are different teeth, and all of their functions are exactly the same.

Q. Doesn't one of them extend down longer than the other? A. The model 17 tooth extends forwardly and downwardly a little further than the previous commercial tooth and than that shown in the view of the scoop in the patent.

Q. Well now, directing your attention to the second Downie patent, No. 1,543,250, I will ask you if it is not a fact that the side rake teeth 27 as shown in Fig. 2 of this patent—

The Court: What number is that now?

Mr. Corbett: 27.

The Court: In Fig. 2?

Mr. Corbett: Yes, sir.

The Court: Very well; I have it.

Q. (continuing)—doesn't assume an entirely different form from the tooth which was used in the demonstrating machine,—the side rake tooth that was used on the demonstrating machine? A. There are no numerals in my copy of that patent referring to side rake teeth. You said the second Downie patent, which is the heel patent. Are you referring me to that?

Mr. Corbett: I should have said the first Downie patent.

The Court: You said the second.

Mr. Corbett: That is my error. That should have been the first Downie patent, No. 1,511,114.

A. The form of those teeth as shown here is different from that used in the demonstrating machine.

(Narrative continued.) The side rake tooth shown in the first Downie patent terminates quite a substantial distance above the teeth of the drop bottom. It terminates at a higher point in the drawing of the patent. I do not find anything in the claims or specification that these side rake teeth were usable for rooting. The only reference to the function of the rake tooth, or that I can locate immediately, is that beginning at the top of the first column of page 3 of the specification, reading, "The bottom 25"—

The Court: What line?

Witness: Line 2, Your Honor.

A. (continuing)—"of the scoop is furnished with digging teeth 26 of appropriate shape fixedly secured to the bottom, while side rake teeth 27 are made fast to sides of the scoop body above and in front of the bolts 28, protecting said bolts from the effects of the material into which the scoop enters."

Q. Do you consider the function of rooting of as much importance as the function of protecting the pivot bolts? A. The function of getting clearance for the pivot bolts is imperative. It is simply indispensable. The matter of rooting is a utility added to the other utilities.

Q. You would say, then, that the matter of rooting was a comparatively minor feature, would you? A. No, I wouldn't say it was minor. I would say it was necessarily subordinate to the major function of permitting the scoop to pass through the material.

Q. But you consider that an important feature, do you? A. Yes, sir.

Q. But you do not disclose it in this patent? A. No, sir.

Q. Have you disclosed it in any of the bulletins that you have issued? A. We have employed it. It may be referred to.

Q. Will you look up tonight and see the earliest bulletin you can find which has that? A. It may be possible to locate something of the kind.

Q. Well, you will make the effort to locate the earliest one that you can, will you? A. I will endeavor to find some such reference, if there is anything in our catalogues which we have here. Of course, we don't have all of our sales literature here.

Q. Well, you have all your standard catalogues here, haven't you? A. But we have issued many bulletins and catalogues besides what we have here, and a number of direct mailing pieces—several dozen of them.

Q. But they are not your standard catalogues, are they? A. They are our regular advertising piece.

Q. Well anyhow, you look over what you have. A. I will look through what catalogues are here.

(Narrative continued.) I will explain to the Court the various methods of discharge that are used with this drop bottom bucket structure. There are two methods of discharge used with this machine, the one, a spot discharge in which the bottom is tripped so that the material will fall out, and the second type or kind wherein the scoop is allowed to swing out to its outreaching position or nearly to it, and in which the material falls out of the mouth of the scoop. In practically all operations in which the spoil is thrown out onto a pile, it goes out of the mouth of the bucket, the same end that it went in. The distance of the spoil pile away from the excavation would vary with the jobs according to the amount of material. In dumping on a spoil pile ten feet high, you would swing the stick upwardly while swinging the machine laterally and the bucket past the sweep of the spoil pile and deposit it on top of the pile. In a pile ten feet high, the pile would be ten feet away from the edge of the machine practically. As to whether they ever trip the bottom of the bucket in throwing it out on the pile, they will, if they desire to throw the material further than they are doing by the simple discharge with our machine; they let the bucket run out rapidly and trip the bottom at the right instant, and it is possible to throw the material beyond the slow motion reach of the machine.

The width of our machine made prior to this full revolving cab machine was ten feet, that is on the crawler, or whatever it may be,—the outermost point of it,—I believe the axle. The boom is pivoted in the center. The customary height of wagons into which the spoil is dumped is five feet or thereabouts. In dumping spoil into a wagon, even with the drop bottom bucket,

it is customary to get the bucket as close to the wagon as you can; it is desirable to place the scoop rather low to the wagon.

Q. Well, will you explain in these Byers demonstrations which you made—these are pictures showing a boom elevated,—this is in Plaintiff's Exhibit 19. You have a scale there, I think, in which you showed that. On 15-B the scoop is shown at an elevation of ten feet; isn't that right? A. 15-B? Is this B, the first view?

Q. Yes. Look on the back and see. A. Yes, clearing nine feet or ten feet.

Q. And in the 15-E you show it a little over twelve feet; is that right? A. Yes, sir.

Q. Now, I understand the situation you are attempting to show by these two photographs, that you had a blind spot in dumping; is that right? A. Yes. They illustrate the utility of the heel, and that there is a blind spot in dumping.

Q. Now, with a machine of this type, which is a 180 degree machine, you are digging right to the front of the machine, aren't you? A. Usually. Of course, in cellar digging you may be digging to either side, but normally, yes.

Q. But in the normal way? A. That is the normal way, yes, sir.

Q. And here you show dumping in front of the machine. Well you can't dump and dig in front of the machine, can you? A. It is not possible to place a conveyance for dumping the bucket immediately in front. This, of course, was a machine closed for the purpose of showing these elevations of the boom, as is indicated further by the fact that the hauling line is disconnected from the scoop. This was not a practical job.

Q. Well, but you were trying to show that the blind spot occurred in the normal cycle of the machine, weren't you? A. No; we removed the bolts in certain of these views.

Q. Well, all of these views show them in ten or twelve feet heights, don't they? A. I believe not. The first view shows a clearing of nine feet.

Q. When the wagon is five feet? A. Yes, sir.

Q. And you are showing a view in front of the machine; is that right? A. These are not placed—the scoop is not here placed with reference to the height of the wagon, but with reference to whatever may be—well, simply at a certain height.

Q. Weren't you trying to show that court that the blind spot occurred in the normal cycle of operation of the machine? A. Well, there would be jobs in which the elevation of the scoop to this height would be in the normal cycle of operation.

Q. And you would be having a wagon in front of the machine and dumping from an elevation of nine feet? A. We did not intend to imply that the thing was limited to the placing of the wagon directly in front of the machine.

Q. Where would you have your wagon? A. More to the side. You could place a wagon right in this position, but normally the wagons would move along side of the machine.

Q. Now, with the wagon moving along side of the machine—how wide are the wagons? A. Oh, five feet.

Q. And it is five feet, as I understand, from the center of the machine to the outside of the crawler? A. Yes, sir.

Q. And then it is at least two and a half feet to the center of the wagon? A. Yes, sir.

Q. And the normal and natural way is to get your drop bottom scoop right over the center of the wagon; isn't that right? A. Yes, sir.

Q. Therefore your scoop would have to be seven and a half feet from your pivot in the first place, if you turned to the side; isn't that right? Where are you going to put the wagon? I will ask you that question first. A. Put it right along side of the machine, at any convenient position.

Q. Well, you can't put it back of these posts, can you? A. Within our spotting range.

Q. Well, what is your spotting range? A. 180 degrees.

Q. Well, if the rear hub of your wagon is put opposite to the front of your tractor—that is the practice, isn't it? A. The rear hub of the wagon? It would depend on which way the wagon is headed.

Q. Well, don't let us quibble about the matter. A. I do not desire to quibble.

Q. Tell me where you put that wagon in the normal operation? A. We would place the wagon somewhere in the loading area, and where the roadway was suitable for it, and where we would bring the scoop into proper relationship for discharge into the wagon.

Q. Now, in the scoop as you have shown it here, if you had your wagon—we will say this is your machine

here, and this is the front end of the tractor. Now you have your wagon, we will say it is facing forward. You have your wagon with the rear hub about opposite the front end of the tractor,—of the traction member; is that right? A. Yes, sir; I understand the position referred to.

Q. Would that be the proper position? A. That would be a proper position, yes, sir.

Q. All right. Now if you had it much back of that, the operator who was unloading the spoil would have difficulty in seeing where the spot is low because of the side pieces on your cab; isn't that right? A. Oh, it is true if the wagon were back far enough so we couldn't reach it, then we couldn't dump the material into it. If you are referring to this, there is some little interference with visibility, perhaps in our A frame, if the wagon is placed on the right hand of the blind spot as we refer to it in the machine. And for that reason we normally place the conveyance on the left hand side of the machine, where it is in the full view of the operator, if the work permits.

Q. Will you explain to me just why it was that in trying to demonstrate this blind spot to this court at Cleveland, that you attempted to demonstrate the shovel in front of the machine? That is kind of hard to understand. A. I am afraid there is a misunderstanding about it. The blind spot to which we have referred in all of this litigation refers to the in and out range of the scoop throughout the entire 180 degrees of swing. It is a figurative use of the word "blind." It doesn't refer to the fact that the operator's vision is obscured with reference to a five or ten degree sector of its 180 degrees.

Q. I know, but that is changing the subject a little. Let's address ourselves to the question of the blind spot, as to whether or not these machines, or these pictures show the machine in the operating scale. These shovels as shown here are too high for dumping; is that right? A. No, sir; they can be dumped at that height.

Q. Didn't you say that the object was to get the shovel as low down to the wagon as possible? A. It was you that made the assumption that the wagon was setting on the same plane of the machine, not I.

Q. Well, you had a five-foot wagon. A. Yes, sir.

Q. And you want to get the shovel down practically touching the wagon, don't you? A. The scoop touching the wagon, yes, sir.

Q. These here put it up to ten or twelve feet high? A. We didn't set it with the wagon along this scoop. I haven't said, and would not wish to be understood as saying, that we would dump into a wagon from a height of twelve feet; in a wagon five feet high it wouldn't be desirable. If the wagon is placed on a higher plane than the plane in which the machine operated, that elevation might be used.

Mr. Richey: Mr. Corbett, did you understand that this was a demonstration at Cleveland before Judge Westenhaver?

Mr. Corbett: That is my understanding.

Mr. Richey: No, that is not correct. That was made at Beaver Falls, wasn't it?

Witness: Yes, sir.

Mr. Corbett: Well, they were used in evidence in the Byers suit.

Mr. Richey: I think we used them in evidence, but that was not a part of the demonstration before Judge Westenhaver.

Mr. Corbett: No, but it was an illustration of that reference to the blind spot.

Q. Now, as I understand this matter, you were seeking to keep your machine in its normal operation from getting to a position where it could not be thrown out; was that right? A. We were seeking? Does that mean—

Q. When you introduced the abutments, and that was the purpose of the proposition? A. Oh, yes, sir.

Q. And when you have your wagon on the side of the machine, we will say, for example, if you had your wagon directly to the right of the pivot, which would have to be seven and a half feet,—the center pivot of the boom—it would have to be seven and a half feet below the pivot of the boom—your scoop to be dumped would have to be seven and a half feet approximately from that pivot in order to get it above the wagon into which it was to be dumped; isn't that right? A. Yes; if the center of the wagon was seven and a half feet from the center line of the machine, then the scoop to the center load of the wagon would have to be seven and a half feet from the center line of the machine.

Q. Now this, I take it, is a pretty good scale that we could use here.

The Court: Have you those marked as exhibits?

Mr. Corbett: They are Plaintiff's Exhibit 19, yes.

The Court: All of them are Plaintiff's Exhibit 19?
Mr. Corbett: Yes.

Q. In the first one, in 15-E, can you say what the distance is from a vertical plane through the pivot of the boom? Measure by the scale shown in these photographs, and give an approximate estimate of the distance from the point of this scoop to the vertical plane through the lower pivot of the boom. A. Estimating as you have indicated, the distance would be approximately five feet, plus three,—eight feet; and from the pivot—

Q. Just measure it from that scale. A. Now you desire this measurement to be made from the pivot of the boom here?

Q. From the vertical plane. A. Vertical plane passing through the pivot of the boom?

Q. Yes. What is your answer? A. The distance from the vertical plane of the boom's axis, to what point now?

Q. To the point of the scoop. A. To say the middle of the scoop—

Q. Well, you can say the middle. A. —would be approximately six or six and a half feet.

Q. And then if you turned this scoop to the side and attempted to dump into a wagon in its normal position you would have to get that scoop out considerably further; is that right? A. Somewhat further. Of course, turning the scoop to the side, it would not revolve upon an axis in the plane of the boom pivot. You understand this is the axis of the vertical movement, and our side swinging occurs upon another axis located further toward the rear than this.

Q. Yes. A. Which would of course increase by so much.

Q. Yes, I understand it is on a turntable, but the point is, when you get it turned around to the side, you are going to have your scoop,—in order to effect any dumping at all, you have to have seven and a half feet or eight feet from the plane of the pivot; isn't that right? A. It would be, if swung to the side here, perhaps eight feet from the center line of the machine to the mid region of the scoop.

Q. Well, then this does not represent any normal cycle of the machine, does it, in operation,—dumping of the load. You have to get it down some, anyhow? A. Yes, sir.

Q. You will have to get it ten feet away from that pivot, won't you? A. You would normally have to get

it ten feet up unless there was a retaining wall immediately adjacent the machine and the wagon or truck setting on top of the wall. However, this view that you have shown, the abutments are not in use, so you see the scoop is behind the blind spot.

Q. Yes, but you wouldn't need the abutments. If you had it lower or further out, you wouldn't have to bring it in your blind spot that you are talking about; isn't that right? A. No, but suppose you are placing it in a wagon outside of this elevation and further out.

Q. But you said you would never want to place it into a wagon from an elevation of five feet high? A. No, I didn't say anything so broad as that. We frequently put the wagon on a plane higher than that in which the machine is standing, but in such place, of course, we need the heels in order to get the scoop out to the wagon at the higher elevation.

Mr. Richey: Some times you dump into trucks, too, don't you?

Mr. Corbett: You are not testifying, are you?

(Adjourned to 9:30 A.M., Thursday, March 5, 1931.)

(Hearing resumed on March 5, 1931, 9:30 A.M.)

CROSS EXAMINATION OF WITNESS, REX R. DOWNIE, RESUMED by Mr. Corbett.

Q. In order to clear up the record, Mr. Downie, in your direct examination you stated on several different occasions about a commercial machine offered by your company from 1913 to the present time. This statement particularly appears on page 88 of this record, and at another time in the record you said that Clutter came to your company in 1912, and that your company became interested in the development of his machine. It is a fact, is it not, that prior to May or June, 1914, your company made only skimmer scoops, that is, in the line of excavating machinery, and if you are claiming any use of ditcher scoops of the Clutter patent it was at least subsequent to April of 1914; isn't that right? A. Beginning and subsequent to that; that is correct, sir.

Q. And as far as that question of any operation of the machine at Conway, Pennsylvania, is concerned, which you have possibly suggested might have been done, you have no actual knowledge about that, and you are merely speaking from hearsay; isn't that right? A. I am speaking merely from company records. I was not present at that work.

Q. Now, with regard to the third Downie patent, which we call the assembly patent—that is, No. 1,709,466, I notice in speaking of that structure, or similar structure, at the demonstration yesterday you spoke of the feature of a single ditcher stick constructed to fit a plurality of widths of scoops. Now, you recognize, don't you, that quite a time before your filing of that assembly patent, it was old to provide sticks of standard size and a series of buckets or scoops of different widths which would fit that same stick and could be attached to it; isn't that right? A. In substance, that is correct. The broad utility of having an interchangeable stick was used by us prior to this patent.

Q. Not only used by you, but used by a number of companies, wasn't it? You will admit that in the excavating industry, considerably prior to the filing date of that patent it was old to use interchangeable scoops on a standard ditcher stick? A. Well, as to the use by others, I am unable to say.

Q. Well, you are not making any claim of novelty of that feature in this patent, or any of these patents in suit; is that right? A. Not novelty in that *per se*, but only in the preservation of that utility in this structure.

Q. Well, you mean by that your particular form of connecting means. That is all you are claiming in this structure? A. That is correct, sir.

Mr. Richey: In this case, of course.

Mr. Corbett: Yes, in this suit. I assume we are not talking about any other.

Q. Did you find any catalogues in which the features of striking a gravity blow or rooting were disclosed; that is, a catalogue of the Keystone Driller Company? A. I looked through yesterday evening the catalogues which we have here offered as exhibits of our machine, but do not find this part of the operating technique explained.

Q. That is, the feature of striking a gravity blow? A. Yes, sir, the method, or how to execute a gravity blow, how to execute the rooting operation.

Q. Neither one? A. Neither one is, so far as these catalogues show, described. It should be said that these catalogues are mainly contact pieces and leads, and I believe the technique is disseminated more by word of mouth by the demonstrator than the salesmen.

Mr. Corbett: Well, I object to that. You don't have to go on and on when you answer a question. Just answer it, please, and stop.

Witness: Yes, sir.

Q. Now, regarding the question of the period from 1912 to 1920, or the latter part of 1919, as I understand it you were only at the plant about three months a year, that is, working there? A. That would be correct.

Q. And so you have no actual knowledge as to the number of back hoes that were sold during that period; isn't that correct? A. If actual knowledge means having counted them personally, no, I do not have actual knowledge.

Q. In the machine which you demonstrated yesterday, during the digging operation the dirt was continually spilling over the top of the scoop at every digging stroke, so that at every digging stroke you lost a proportion of what you actually dug; isn't that correct? A. No, sir, the dirt would fall over the end wall of the scoop if the operator pulled the scoop sufficiently far and had a sufficiently large load; but "continually" is over-emphasizing it, and it did not occur at every stroke. However, it is true that when loaded heavily, and if pulled up far enough towards the boom the dirt may fall over the end plate.

Q. That is quite a marked disadvantage, wouldn't you say? A. No, sir.

Q. Well, would you say it was an advantage? A. I would say it was an advantage, since the weight thereby saved more than offsets the loss of material. As experienced designer of the scoop, I think that it is no disadvantage.

Q. You say that the weight thereby saved— A. Yes, sir.

Q. Will you explain that a little more, please? A. I believe that the weight saved by not boxing in the top of the scoop is of more worth than such spillage of material as occurs by lack of the plate.

Q. You consider that an advantage rather than a drawback? A. I consider that it is a neutral point.

Mr. Corbett: Now, if Your Honor please, in view of the fact that this witness has indicated that he has no actual knowledge, either regarding the money paid by way of royalties or otherwise, for these patents in suit, or any of them, and that he has no actual knowledge regarding the number of machines, number of back

hoe attachments, sold from 1912 to 1919, inclusive, we move to strike out all testimony relating to that matter.

Mr. Richey: If Your Honor please, both of these points are merely make-weights on the question of invention; the exact amounts are immaterial. The witness knows of his own knowledge that the machine has been a commercial success. As to the exact numbers he perhaps does not know, but that is immaterial; and the same thing applies, of course, to the money paid. As an officer of the company, he knows a substantial sum was paid, and that large numbers of these machines have been made and sold and put in use.

Mr. Corbett: Your Honor, we think that this case should be tried on the basis of facts, instead of on the basis of speculation, and where a witness admits that he has no actual knowledge of those facts, we believe the testimony should be stricken out.

The Court: I think your objection goes to the weight of the testimony; the motion will be overruled.

Mr. Corbett: Exception.

The Court: He is an officer of the company?

Mr. Richey: Yes, sir.

The Court: An officer of a company does not have to know everything that is going on in order to be able to give some idea.

Mr. Corbett: That is all, Your Honor.

RE-DIRECT EXAMINATION by Mr. Richey.

Q. Mr. Downie, you were asked about the catalogues of your company and about their disclosing certain functions of this machine. Will you explain just what is the purpose of these catalogues that are issued in your industry?

The Court: I suppose on that, Mr. Richey, the catalogues speak for themselves, don't they?

Mr. Richey: Well, this is not like selling soda, where a man just buys it by the box, but the catalogues just introduce it, and then he buys the machine on demonstration.

The Court: I think he has a right to show how this information about striking the gravity blow and this other thing—how that information is disseminated, but on this particular question, the catalogue speaks for itself.

Q. Well, will you answer as the Judge has stated; answer the question how you disseminate the knowledge?

The Court: What is your practice, if there is any, as to telling your customers the various merits and demerits of your machine; I don't suppose you ever talk about demerits, but how do you get the merits to them?

Witness: We do not have any rigid rule in regard to the matter, but the catalogues, in the main, are to show the kinds of work which—

The Court: Well, the catalogues speak for themselves, and anybody can read them and tell what the catalogues say.

Q. In other words, how do you tell your prospective customers about such merits of this machine as striking a gravity blow and rooting? A. The demonstrator on the job explains the utility of the machine, and teaches a man to do it. Is that what you mean?

Q. Yes. That is the practice? A. That is our practice, yes. We demonstrate each machine.

Q. Will you give the court some idea of the area of these blind spots, both in the horizontal and in the vertical? A. That is, the extent of what we call the blind spot?

Q. Yes, the area. A. At the elevation of that machine shown in certain exhibits introduced yesterday, at the elevation of ten feet, I believe it is, the additional outreach gained by the use of the abutments is some three feet; so that distance, radial distance of three feet, as representing a segment of the annulus, would represent the blind spot, at that elevation. Now, at lesser elevations the amount of outreach gained by use of the segment, which would otherwise be blind spot, that marginal zone decreases.

(Narrative continued) Referring to defendant's Exhibit 61, these additional features, such as these abutments, 1 and 2, and the machine rotating 360 degrees instead of 180, in no way affect the function of the machine, that is, the question about the function and the operations included in these patents in suit. A lot of spoil is loaded into trucks that are much higher than wagons.

In addition to the experience I have had with machines in demonstrating them, I have done a lot of work in the testing ground at Beaver Falls on the machines. I have tested them under various conditions and special circumstances.

Q. Now, is this rooting a virtue that is inherent in the machine of the first Downie patent? A. Yes, sir.

Q. Can you produce some marked photographs or sketches that better illustrate the operation in the defendant's machine with respect to the blind spot, and if so, will you do so? A. Yes, sir, I have certain photographs.

Mr. Corbett: I suppose that is not a part of the re-direct testimony.

Mr. Richey: Well, of course, we can put him back on again later in the regular order, but I thought I could cover this with him now.

The Court: Yes, that may not be re-direct, and you may re-cross examine him on that point, if you want to.

Mr. Richey: Or any other subject, so far as that is concerned.

The Court: Well, that is the way I feel about it, too.

Mr. Richey: I mean, of course, with the consent of the court.

The Court: Yes, I will let him cross examine, if desired.

Mr. Corbett: This, Mr. Richey, is the General Excavator or the Osgood?

Mr. Richey: Both of them.

Mr. Corbett: Well, you better take them separately, don't you think?

Mr. Richey: Well, yes, cancel that question, and I will just say, have you marked up any photographs of the General machine to illustrate more nearly the operation of that machine in eliminating the blind spot, and, if so, will you produce those photographs? Now, take those up first, the General.

A. Yes, I now produce two photographs—

The Court: Better mark them as exhibits.

Mr. Richey: We will have them marked as "Plaintiff's Exhibits P-36 and P-37." You can put reference numerals on those parts, if you want to, with pencil.

A. These two views are marked "D" and "E" and correspond to the views "D" and "E" of Exhibit P-27 introduced previously. The photos are the same except that the corners of the structure at the outer end of the boom and the upper end of the stick, and including the bridle, have been outlined or retouched in ink to bring out more precisely the contour of the parts. The shoulders or ledges upon which the bridle contacts are thus

made more apparent in the view "D" and the bridle may be seen to be in contact with the shoulder in the view "E."

Q. That is, Exhibit 36 is "D" and Exhibit 37 is "E"? A. Yes, sir. I should have referred to view "D" inked as "P-36," and view "E" as "P-37."

Upon view P-36 I am marking the letter "A" indicating the point upon the bridle which contacts with a ledge upon the stick, and by another lead line and arrow and the letter "B" I am indicating the point on the stick interengaging with the bridle. Similar characters are on the Exhibit P-37.

Q. Now, I will ask you the same question regarding the Osgood machine, and in that connection I hand you a sketch marked "P-38." A. This is a sketch illustrating roughly the structure of the Osgood machine including the upper end of the stick, the outer end of the boom, the link connecting the hoisting sheaves with the head end of the stick, and is intended to illustrate the Osgood structure shown in various views and positions in Exhibit P-30, and on the sketch referred to, P-38, the letter "A" indicates the point at the upper end of the channel which is built upon the inner face of the ditcher stick, which serves as contact for the bridle, and as a stop for same. The letter "B" leads to the point upon the bridle which contacts with the point "A" on the stick. The various parts are named, such as link, hoisting line, boom, stick, and the channel member of the stick. Also, the line of tension is indicated by a broken line passing through the bridle pivot and extending toward the machine, and intended to terminate at a point equi-distant between the parts of the hoisting line, and the action of the bridle when in its stopped or limited position with reference to the stick is indicated by the fact that the bridle sheaves are deflected above that line of tension.

Mr. Richey: We offer the two photographs and the sketch in evidence as Plaintiff's Exhibits P-36, 37 and 38, respectively.

The Court: They will be admitted.

Mr. Corbett: Your Honor, we would like to object to them until we have a chance to compare that with our structure.

The Court: Well, I will admit them, and if you want to make an objection to them later, Mr. Corbett, you let me know.

Q. In some cases of digging in hard rock, dynamiting or blasting is used in connection with the Clutter machine, or these other machines; that is correct, isn't it? A. Yes, sir.

Q. Now will you explain that operation? A. That is, the operation of dynamiting?

Q. Dynamiting, or loosening the rock first? A. When rock is encountered which is too tedious or difficult to execute without dynamiting, there are holes drilled usually by what are called jack-hammers—that is, an air actuated drill—and charges are placed in these holes, which may be from two to ten or twelve feet deep, and charges are set off to loosen the material, which is then dug out by means of the machine, possibly with further fracturing by the machine, or the charge may entirely fracture the material from its original position, so that there is only the gathering and normal digging operation performed.

Q. Some point was made here during your cross examination about the machine demonstrated not being an exact duplicate of that shown in Exhibit 24, having these additional abutments. Have you some photographs that show that actual machine, in all its particulars, whether they relate to the movements here or not? A. Showing which actual machine?

Q. The one we demonstrated yesterday, over in Mr. Davis' coal yard? (photographs handed to witness) You don't know whether that is the same machine or not, but is it the same type? A. I have here photos of precisely the same type of machine.

Q. Showing the abutments in that Exhibit 61? A. Yes, sir.

Mr. Richey: I offer them in evidence as Plaintiff's Exhibit P-39.

The Court: We will admit them.

Mr. Richey: I don't suppose Your Honor cares to see them; you saw the machine.

The Court: No.

Mr. Richey: That is all, gentlemen.

Mr. Corbett: That is all, Your Honor.

Thereupon the plaintiff, further to maintain the issues upon its part, called as a witness in its behalf EDWARD M. MORRISON, who, being first duly sworn, testified as follows:

DIRECT EXAMINATION by Mr. Edgerton.

My name is Edward M. Morrison. I am thirty-one years of age. I reside at Akron, Ohio. My occupation at the present time is subcontractor, but operating my own shovel. I have been engaged with my own outfit five years this month, about. I have been an operator, practically nothing else, the biggest part of ten years. I am familiar with various types of excavating machines. I have been operating in Cleveland, Youngstown, Akron, all around that section, through the country. As to the type of soil or ground that has been encountered in that district, I will tell you—you strike all kinds of stuff. You get sand, rock, shale and get what we call layers of flint rock, and practically all kinds of stuff, from quicksand up and down. As to the type of shale and flint rock, it runs different in different sections, but ordinarily when you strike shale—not ordinarily, but part of the time where you strike shale, you will get what we call a layer of flint rock in it, maybe several layers in it, before you get to the destination you are going, the depth you are going, and this flint rock runs in layers in places from—oh, an inch to four or five or six inches, like that, and sometimes thicker; but it is hardly ever any thicker than that.

I am operating a Keystone machine right at present. I have had occasion a number of times to dig that material. The Keystone excavator has a back hoe attachment. I have in excavating through that type of material to which I have referred used the gravity blow on it, or we can use what I call the power blow on it. By the power blow, I mean when you raise your bucket a certain height, whatever you feel is safe to use on the machine without wrecking it, the way I do, on an average of about two feet or three feet, and release my holding line which is the boom line, and on my power line, which has a drag line on it—I always call it a drag line—by taking up on the drag line or loosening the boom line and grabbing the drag line, puts what I call a power blow. By doing that it forces the blow on the teeth, gives them a jerk that forces it in. It is common practice to go through that kind of material that way, that is, with that kind of machine. I never was employed by the Keystone Driller Company.

I have used an instroke machine going through this shale, etc., and using the gravity blow where I have had an opportunity to compare with the outstroke dig-

ger, and to ascertain the differences between the mode of operation and the effect of the work done by the machine, and my observation is that there is no way that you can put a power blow to the outward machine. I have found that one will go through where the other will not. In working in the city, I have gone through such materials as pavements with a back hoe or gravity blow machine, a number of times. My experience with this kind of material is that there is times you get pavement that you don't have an air compressor to cut through the things like that, and you use the chopping effect, or picking effect of the Keystone bucket, or Keystone machine, and you can cut your way through. This I have done. I have undertaken a contract where the owner requested me not to do any blasting or to limit the blasting, and where the material was of a hard type and you had to use the gravity blow. It happened just last fall, digging up to Cleveland Farms, and the Cleveland Sanitarium. The superintendent of it asked us if, or told us if there should be any possible chance to cut through without any blasting, he would be glad for us to do so, for they had lots of patients in shape that they might go any minute on anything like that, and we told them that we would do the best we could on it. Of course, we got in places that we did have to use a couple shots, but we held it down all we could cutting it through the sandstone that we had, and they were very well satisfied.

I have used the Keystone machine of the back hoe type quite often in undercutting. The advantage of that is when you are working around trees or poles, or there is times you get a stone, or what we call a niggerhead, a large niggerhead in your ditch that you don't feel as if you want to take several yards of dirt to get at, and you cut around the edges of it and go under as far as you need to, if you can reach that far, and cutting around poles or trees, you can set your machine at least a foot to two foot off the line and still get anywhere you want to.

Cross Examination by Mr. Corbett.

Q. Have you ever operated an outstroke shovel, Mr. Morrison? A. Very little.

Q. Well, you are not in a very good position to say, then, just what you can do with the outstroke shovel in comparison with the instroke shovel? A. I have worked around them; I have seen them quite often working.

Q. Did you ever operate any other shovel than a Keystone back hoe? A. Yes, sir.

Q. What kinds? A. I have operated Marions, Bearcats, and Orton-Steinbrenner—oh, several different makes; I couldn't name them all.

Q. This undercutting that you speak of, was that done with the Keystone machine? A. It was.

Q. Well, what was the model of that machine, do you know? A. Model 4.

Q. Is this the type of machine that you did the undercutting with; is that the same machine? (Referring to Plaintiff's Exhibit P-21.) A. Yes, all except the cab. They built them without the cabs, the one I see.

Q. What do you mean by that? A. Well, instead of having the enclosure on it, they had the curtains. It is practically the same machine.

Mr. Corbett: The exhibit referred to is Plaintiff's Exhibit P-21.

Q. Just what is your operation in undercutting with this machine; how do you go about it? Do you make any special preparation for that? A. Well, it all depends how deep you have to go with your undercutting, the way I figure it. If you cut in—say that I figure in going around a tree, I will start my undercutting before I get to the tree, and by the time I get there I am in line with it, or where I should be.

Q. Just how do you do that? A. By twisting your boom over, and your bucket stick.

Q. How do you do that—by turning ropes, cables? A. Cables, swings.

Q. By the swinging cable? A. Yes.

Q. In this Keystone machine, do you always dig in front of the machine, or practically always? A. Well, unless you are digging a basement, or something, with your hoe back you do; but there is times you want to make a wide reach to the right or left of you, you can swing over.

Q. But your usual way of digging is in front of the machine? A. The usual way in ditch work is straight in front of you.

Q. In this flint rock that you speak of, it comes in layers; is that right? A. It comes in layers, yes.

Q. And how thick do you say those layers are? A. They run anywhere from two to four and six inches, sometimes you run into it.

Q. Have cracks in the layers as a rule? A. They do, usually, and also the shale between the two.

Q. And what you do really is to get your point of your teeth of the back hoe in one of those cracks and pull it up; isn't that right? A. Well, if you get yourself so you can get your teeth in, if there is any possible chance of getting them hooked, but if not, you stand there and chop it out.

Q. And how far down does this flint usually occur? A. Well, it is hard to tell about it; it runs different in different places.

Q. Where was it that you dug flint? A. Oh, I have dug it a number of places—Akron, Youngstown, Cleveland—

Mr. Corbett: That is all, Your Honor.

Thereupon the plaintiff, further to maintain the issues upon its part, called as a witness in its behalf Robert C. Sessions, who, being first duly sworn, testified as follows:

Direct Examination by Mr. Richey.

My name is Robert C. Sessions, and I live in Cleveland, Ohio. I am employed, or rather my occupation is that of a consulting engineer. My qualifications that enable me to testify as an expert in this case are as follows: I attended Wooster Polytechnic Institute, and graduated with the degree of Bachelor of Science; after graduation I had a scholarship for one year's study in engineering in Sweden. After that I was engaged in consulting engineering in Cleveland with my father, Frank S. Sessions, for about five years; then for the next five years I was connected with Steel & Tubes, Inc., at Cleveland, in various engineering capacities, and was for some time general engineer in charge of the entire engineering and experimental development work of Steel & Tubes, Inc. Since June of 1930 I have been again associated with my father, Mr. Frank S. Sessions, in the practice of consulting engineering. My work has involved general engineering matters of all varieties in connection with the designing of machinery, the handling of equipment and machinery, and in connection with that work I have had a great deal to do with patent matters. I have testified in patent cases; I have studied patents and made numerous reports on patents throughout the past ten years.

I have examined the drawings and the descriptive part of the patents in suit here, and the catalogues showing the plaintiff's commercial machine and the defendant's machine, and the other exhibits that have been offered in evidence here. I have heard Mr. Downie testify regarding these machines and their operations and results.

Q. Will you state whether you do or do not agree with the descriptions he has given of these machines and their operations and their achievements, and with his opinions regarding the same? A. I agree entirely with Mr. Downie—

Mr. Corbett: We object to that.

Mr. Richey: In view of the attack that apparently is going to be made on the credibility of Mr. Downie's testimony, we felt that he ought to be corroborated all along the line, and I didn't want to go over all this matter in detail with Mr. Sessions.

Mr. Corbett: Well, you don't want to put the burden on us of going over it either, do you?

Mr. Richey: No; but I wanted the court to know the purpose of that particular question. It may be unusual, but it obviates going over all of that expert testimony.

Mr. Corbett: Well, I assume that these experts will O.K. each other, but that is certainly going some, to take a day and a half's testimony, and have him say that he O.K.'s all that testimony. He hasn't even shown that he knows about these machines.

Mr. Richey: Well, let's ask him that, then.

Q. Have you seen these ditching machines operate? A. Yes, sir.

Q. Which ones? A. I have seen the Keystone machine operate, and the General machine operate, and I have seen—to my knowledge I have seen the machine of the Northwest Company operate—

Q. Well, just those involved in this case. A. But as far as I know, I have never seen an Osgood machine in operation. I may have seen it before I became involved in this case, and was not noticing the names on the machines.

Q. You have seen the General machine operate? A. Yes, sir.

Q. And you have seen the Keystone machine operate? A. Yes, sir.

Q. And you have seen the one demonstrated yesterday? A. Yes, sir.

Mr. Corbett: I object to Mr. Sessions testifying about the comparative operation of the Osgood machine with the Keystone patent, when he has never seen an Osgood machine in operation.

The Court: Oh, I guess Mr. Richey realizes he is not qualified on that.

Mr. Richey: He has qualified, Your Honor, as an expert engineer and mechanic; he knows how the thing would operate.

The Court: Yes, but he doesn't know anything about the Osgood machine, and certainly is not in any position to testify about the Osgood machine, on his own statement.

Mr. Richey: Well, we will take the testimony, then, with that ruling.

Witness: I have seen an Osgood machine, but I have never seen it operate. I have seen the parts of the Osgood machine.

The Court: I don't think that would qualify him; you certainly would not ask the court to put much reliance on his testimony about the Osgood machine under those circumstances.

Mr. Richey: Well, I am glad to have that view of Your Honor, because I am certain the other side will bring on a number of experts to show how these other machines have operated, that never seen them operate.

All right; that is all I have to ask you.

Mr. Corbett: We object to that broad question, absolutely; we don't think he is qualified to say that what Mr. Downie has said regarding the questions of infringement of these patents by the Osgood machine—that is included in that question—It is a question to the effect, have you heard all the testimony that Mr. Downie gave, and do you agree with it?

Mr. Richey: No, that isn't it. I didn't ask him about that. I asked him about the expert testimony that Mr. Downie gave.

Mr. Corbett: Well, the facts are mixed up with the question.

The Court: I wish you could make that short cut, Mr. Richey, but I don't believe you can.

Mr. Richey: Let us ask it this way:

Q. Mr. Sessions, basing your opinion upon the observations that you have made of these Keystone and General and Osgood machines, and on your observation of the operation of the General and Osgood machines,

and on your general engineering knowledge, do you or do you not agree with the opinions that Mr. Downie gave regarding the operations of the machine illustrated in the patent and the defendants' machines, and what they will accomplish?

Mr. Corbett: Your Honor, as I said, he has not seen the Osgood machine in operation. How can he say whether he agrees with Mr. Downie or not? This is just wasting the time of the court, Your Honor.

Mr. Richey: Well, it goes to the weight of his testimony; it doesn't make it incompetent.

The Court: Well, it goes so far to the weight that there is nothing left.

Mr. Richey: Well, I am glad to have you take that view, but my own view is that an engineer can study a drawing and testify how he thinks it will operate without actually seeing it operate.

The Court: He can testify as to how he thinks it will operate, but it won't always bring out the actual practice. I know enough about that.

Mr. Richey: Well, I yield to Your Honor's views.

The Court: A great many of these paper patents don't work; I guess you know more about that than I do.

Mr. Richey: A great many of them, yes, sir. Well, as I say, my purpose here is to shorten the matter.

The Court: I know; I agree with your laudable purpose, I wish you could shorten this up, but I don't believe you can do it if they object.

Mr. Corbett: We certainly object.

Mr. Richey: All right; then we will have to go through with it.

Q. Mr. Sessions, will you look at the drawings and descriptive part of the specification of the Clutter patent 1,317,431, and explain its operations, and what it will do. You may use the big drawing, and also the model, Exhibit P-15, if you wish. A. Referring to this enlarged drawing of Fig. 1 of the Clutter patent, this shows a machine of the inward arc type, that is, a machine of the type with a mechanical hoe in which the scoop is mounted—the scoop, which is part 3, is mounted on the stick 1; the stick is pivoted to the outer end of the boom 15, and the control of this machine is accomplished entirely through the use of two power controlled lines; the one line 23 is the hauling line, which moves the scoop toward the boom with the power control; the line 18 is called

the hoisting line. It is connected through a linkage to the stick member and boom in such a manner as to cause the combined forces to act to raise the boom and extend the stick beyond its normal vertical hanging position.

The machine is capable of swinging the scoop through a radius of approximately 180 degrees, and the scoop is power-controlled throughout that entire range. It is a machine embodying a single scoop; this scoop is mounted on a stick in such a manner that it bears a fixed relation to the stick at all times during the cutting or digging operation, whatever that may be. The specification of the patent describes the functioning and operation of the parts; I don't think it is necessary to read the particular parts of the specification, where they are brought out. The machine is adapted to cutting a trench equal to the width of the scoop, which is an important feature. Another feature of this machine is that in discharging the material from the scoop it is possible to raise the scoop to the position of discharge and then swing it back and forth until it reaches the exact point at which it is desired to discharge the material. The discharge is accomplished in one of two ways; either by tripping the latch 12 which allows the scoop to swing out and discharge the material, or the discharge may be accomplished by swinging the scoop outwardly and merely allowing the material to fall out of the open front end of the scoop.

It is possible with this machine to close the scoop or to fix the scoop rigidly with respect to the boom when the scoop is in the air; that is, it is not necessary to put the scoop down onto the ground to force the latch member to engage with the pin 5 which holds the scoop in its fixed position. It is possible to close the scoop in either manner.

Of course, the boom is mounted to swing about in a horizontal plane, to bring the material up to the side of the machine or away from the point in which the digging is going on, and to discharge the material in a different position. I think that describes it.

Q. Now, will you take up each of the other patents in suit and describe the constructions and the mode of operations and results, and as you go from patent to patent, will you preface your remarks with the number of the patent? You can use the model, the drawings and the exhibits here, the catalogues and so on, if you wish.

A. The machine of the first Downie patent, which is Patent 1,511,114, is a machine of the type of mechanical hoe or mattock, or the inward arc scoop, similar to the Clutter machine. It has certain features differing from the Clutter machine. The machine in general embodies all of the features of the machine of the Clutter patent; that is, in its functioning and mode of operation and results accomplished.

The machine embodies the stick 11, boom 2, the linkage 15 connected to the hoisting line 18; the hauling line 43 is connected to the scoop through a bail 40. The stick member of this Downie Patent 1,511,114 is constructed of two channel irons. This appears best in Figs. 3 and 4 of the patent, and is not shown clearly in Fig. 1, and these are two channel irons which have their flanges facing inwardly towards each other, and as shown in this model which is Exhibit P-17; two channel construction of the stick makes a very strong and rigid construction. The channel irons are spaced from each other and held in that spaced relation by spacing members. This construction provides a much longer and more secure bearing between the stick and the boom at the bearing, which is marked 6 in Fig. 1 of the patent. The scoop itself is provided with a drop bottom as it is called; that is a bottom which is pivoted near the lower front or open end of the scoop, pivoted to swing freely through 180 degrees or more; a latch member at the rear of the scoop engages the bottom and holds it in position.

This construction makes possible a very desirable feature of momentum closing, which has been demonstrated by Mr. Downie, and demonstrated in the demonstration of the machine which the court saw yesterday; the bucket may swing closed in mid-air; the bottom of the bucket may swing closed in mid-air, and at the same time this opening of the bucket in this manner provides a considerable improvement in the manner of discharging over that of the machine of the Clutter patent.

The scoop may be spotted accurately over a load, and in tripping the bottom of the scoop the material falls vertically downward directly under the position of the scoop, whereas in the machine of the Clutter patent the operation was such that in dropping the bottom the scoop swung downwardly and the material flowed out of the scoop in a slightly forward direction, or direction toward the machine, so that the material did not fall exactly

under the scoop, and the operator was not able to determine as accurately where his material is going to fall in loading it into a wagon or truck.

The drop bottom principle on the scoop of a machine of this type further provides the ability to discharge sticky material more readily, because in discharging, the material in the scoop first tends to free itself from the sides and end walls of the scoop as it is carried downward by the entire weight of the material plus the weight of the bottom which is swinging. Then as the material is started to free itself from the sides and end wall with the entire weight of the material and the bottom available to cause that freeing, it is able to exert the force of the weight of the material entirely upon freeing itself from the bottom.

The Court: You mean centrifugal force?

Witness: No, merely the weight—the force of gravity acting on the materials; just the weight of the material acting downwardly is first used in freeing itself from the side walls, and later from the bottom of the scoop.

This machine is capable of performing the function of undercutting which was explained very thoroughly, and was demonstrated in the exhibition of an actual machine yesterday. This undercutting requires the rigidly constructed stick in this first Downie patent, No. 1,511,114, and a rigid or a strong but yet comparatively flexible boom, a boom that is capable of being twisted as we apply our side thrusts, and at the same time the scoop must be held rigidly and very securely to a rigid stick, so that the scoop does not itself tend to twist out of the line of pull. The teeth of the scoop must be presented in the direction of the line of pull or the line in which the trench is to be cut, and it must be off to one side. This requires the features as shown in the first Downie patent, and as were embodied in the machine of the Keystone Driller Company. The scoop in this first Downie patent has what are called side rake teeth. These are shown as part 27 of the patent drawing. The side rake teeth are rigidly secured to the sides of the bucket, and not to the bottom; the teeth must protect and cut a clearance sufficient to prevent destroying of the pivot bolts for the bottom. These pivot bolts must remain in a condition whereby the bottom may swing freely at all times in order to accomplish this momentum closing, and the forces acting against the bolts are severe, particularly in striking

a gravity blow and in cutting through hard materials. The pivot bolts would soon be destroyed by rubbing against the side of the trench unless they were otherwise protected, and it is important that these side rake teeth serve to protect those pivot bolts and cut a sufficient clearance for the rest of the scoop body so that it may be withdrawn backwards through the trench that has been cut in the course of operation, because it is frequently important that the operator be able to paw, as was demonstrated yesterday, in the trench and the scoop must come back freely and go forward freely. The digging operation is not merely a fixed swinging upward in the same direction and out of the trench; it is frequently and commonly a pawing and back and forth movement, so that the trench must be cut wide enough to clear all the members of the scoop other than the tooth blades themselves, or the side rake tooth blades themselves. I think that covers the first Downie patent, No. 1,511,114.

Now, referring to the second Downie patent, No. 1,543,250, this is a patent which relates to the so-called stop or heel or abutment. The purpose of this patent and invention was to avoid the so-called blind spot which has been talked about and described. These stop parts are indicated in the patent as 23 and 24, shown in Fig. 3 on the page nearest the specification; that best shows that actual detail of the stop mechanism. The functioning of the parts is merely such that when—I will demonstrate this by the use of the model of the Keystone machine, which is Plaintiff's Exhibit P-17—when the stick approaches a certain angular relationship to the connecting links or bridle members, which are parts 15 of the patent, there is provided a means whereby the link or bridle members 15 are caused to move upwardly, out of the line of tension or line of pull, out of alignment with that line, which extends from the line of the hauling line 22 out to the point at which that hauling force is being applied, which is the pivot 14 of the patent drawing, and thereby maintains a definite mechanical advantage or lever arm whereby the scoop may be moved in and out through a considerably longer range than is possible if the means—the abutment means or stop means, are not provided. This is very important in discharging—spotting, as it is called—material over a truck. A truck may stand out here opposite the machine, and if the bucket will only stand in one position, or can be extended over a comparatively small range, if is

often difficult to get directly over the truck, and this merely increases the spotting range, and in increasing this range avoids the so-called range which cannot be reached without these stops, or the so-called blind spots, which is not available, and in which the scoop may not be used, if such mechanism is not employed. And I might say further in connection with this patent, before I go on, that this action takes place and occurs at numerous elevations of the boom; that is, with the boom down low, the action is necessary and occurs in those positions, and the parts contact and the angular approach of the stick to the connecting link or bridle is limited, but at the same time, while this angular approach of the stick to the connecting link or bridle is limited, at the same time the scoop may move freely inward toward the boom. You will note that the angle is definitely limited between the stick and the bridle, and that limitation of that angle, angular approach of those parts, causes the linkage to be thrown upward, the linkage or bridle, which is part 15 of the patent, and out of the direct line of tension, but the scoop may at the same time be continued in its motion in and out from the boom. With these parts of the stick and the connecting link in fixed relationship, and at various heights of the boom, that same action occurs. In fact, through a complete range of elevations of the boom that action may occur.

Referring to the third Downie patent, No. 1,709,466, this patent relates to the means for connecting the scoop proper to the stick. It provides a means which is readily interchangeable; different widths and sizes of scoops may be taken on and off of the machine and the stick with great facility, and this interchangeable feature at the same time provides and retains the very desirable feature of preventing, or of not using any bolts which are in shear; that is, there is no shearing action of the bolts which are used in changing the scoops. This means that these bolts are only in tension, and no serious wear occurs in the holes through which the bolts pass. Your Honor understands that if bolts are in shear, there is a side thrust employed on the bolts, or rather, assuming my pencil here to be a bolt, the bolt is forced sidewise back and forth, and this action wears the bolt and gradually enlarges and wears out the hole through which the bolt passes, at the same time making it very difficult to maintain a scoop rigidly mounted upon a stick, because as soon as wear occurs, or as soon as the bolts shear,

there would be a tendency to affect that rigidity which we have here; whereas the bolts are always under tension under the pulling force, and they have no tendency to destroy themselves and destroy the hole through which they pass, and they maintain themselves much longer, and the bucket may be maintained tight and rigid on the scoop free from vibration with much less difficulty. The bolts which accomplish this are shown on the patent drawings as 28, which is the bolt which attaches the foot of the stick to the cross member over the top of the bucket, part 24, the bail.

The Court: Well, there are two bolts?

Witness: There are four bolts shown on this; these four bolts act to attach the foot of the stick through a definite foot member on the end of the stick. The bolts 33 pass through the flanged plates or angle plates 25 in such a manner as to hold these plates in against the foot of the stick and prevent the stick from twisting, or the bucket from twisting on the stick, and prevents rubbing and wear at that point, and prevents the bolts 28 from being subjected to shear. The bolts 32 are also provided and necessary to be taken out to make the change in scoops. These bolts are located at the rear of the scoop, connecting bracing members 29 to the rear of the scoop in such a manner that those bolts 32 also are subjected to tension forces and not to shearing forces.

This patent also contains a stick made of two channel members, and it is a rigid structural stick, which employs a drop bottom; as shown in the patent, it uses a drop bottom scoop, which is part 18 in the patent drawing. In general, this machine functions and employs the same features as the machine of the first and second Downie patents, the particular feature involved in this patent being the method and manner of attaching the scoop to the stick.

The fourth Downie patent, No. 1,716,432, is the patent which relates to the side rake teeth. These teeth are securely fastened to the side walls of the scoop; they must be such as to stand severe blows, and must be narrow and not to excessively widen the wall portion of the scoop to which they are attached. The teeth shown are provided with an aperture through which the pivot bolt passes; the aperture is 23 in the patent drawings, and the pivot bolt is 14 of the patent drawings. This pivot bolt is the pivot about which the drop bottom or

momentum closing bottom swings freely in order to accomplish the discharge of the material at the subsequent momentum closing of the bottom. The teeth are provided with a material penetrating point 19, which engages the material in a horizontal plane; then a cutting surface or shearing surface 21 is provided, which shears the material in a vertical plane. Surfaces are provided which tend to turn the material inwardly into the scoop body, and in this manner the action of the side rake teeth is effectively accomplished; their functions are accomplished in a very successful way, and makes possible in an entirely satisfactory manner the single width cutting, and divides the forces acting on the teeth, first to cut and cleave in the horizontal plane, and then to cut and cleave in the vertical plane, to cut the necessary clearance for the scoop when it is used in cutting trenches which are of the width of the scoop. I think that covers it.

Q. Now, you said you were at the tests yesterday, attended by counsel and experts for both sides, and the court. Will you state just what was done at those tests. A. At those tests a Keystone ditcher, that is, a machine embodying the features of the patents here in suit, was used; it is the particular Keystone machine which is known as Model 17. It was used to perform and demonstrate the various functions involved in trench and ditch work, and the operations which are necessary in that type of work, and the machine employed a two-member control, and was operated by the two hands of the operator throughout all the digging operations. The machine was used to strike gravity blows, to show the great force which may be developed in a machine of this type, and causing the teeth to penetrate hard material and sticky material. The scoop was used in the pawing action, which is very necessary in certain parts of the operation. The scoop was dumped by employing both the simple gravity discharge, at which the scoop is extended outwardly and the material is allowed to fall out of the mouth of the scoop, and it was dumped by using the drop bottom, and causing the material to fall accurately below the point at which the scoop is positioned at the time the dumping occurs. The bottom was closed by momentum.

The Court: Well, it performed all of the functions that he testified to?

Mr. Richey: That is right.

Witness: The machine was used for rooting, to demonstrate that feature of undercutting, and all other features that I have described.

Mr. Richey: Now, can I take this witness off and put on a fact witness?

The Court: I don't see why you can't. You are pretty near through with him, aren't you?

Mr. Richey: Yes, sir, with the exception of the question of infringement.

Thereupon the witness EDWARD M. MORRISON, being recalled for further examination by the plaintiff, testified as follows:

DIRECT EXAMINATION by Mr. Richey.

I have seen machines of the General Excavator Company, one of the defendants in this case, as illustrated in the cuts and photographs, Exhibits 25, 26, 27 and 28, and particularly the view on page 9 of Exhibit 25, and have seen them operated. I have seen this machine in Cleveland, seen them in Akron, and worked right along side one in Akron, which was on a sewer job —Louis Crano owned the machine—for a period of two months, I think. This machine was doing ditch work; sewer work. As to operation and compared with the machine of the Keystone Driller Company, the bucket action of it is practically the same. As to the action of other parts, the drum action and stuff like that is a different action in the machine, that is, in the power plant. As far as the ditching attachments were concerned, it is practically the same hook-up. It does the same thing the Keystone machine does. Referring to the machine of the Osgood Company, as illustrated in P-29, shown particularly on page 20—well, on all pages in this, I have seen machines like that in operation. I have seen them in Cuyahoga Falls; that is a suburb of Akron, in which the machine belonged to the Frank George Construction Company, and in fact—see, I can tell you close to the date; well, it worked on this one job there, well, I will say May until the latter part of June, up maybe to the 1st of July. It was doing ditch work; trench work.

Q. Well, limiting my question to the attachment features, that is, the boom and stick and scoop and that

part of the combination, how did the operation of this Osgood machine compare with that of the Keystone machine you have testified to this morning? A. Practically the same. The same as the National, too.

Q. The General, you mean? A. Yes, the General. It is all on the same principle.

Mr. Richey: That is all.

Cross Examination by Mr. Corbett.

Q. What type of General excavator, or what type of Keystone Driller machines are you familiar with? Are you familiar with the type wherein the link goes away from the boom and is not connected to the boom? A. I am.

Q. Is that the one you are familiar with? A. I have been familiar with all of them, and worked all types of them.

Q. You are also familiar with that one over there that has the upstanding support? A. Yes, sir.

Mr. Richey: That is the Clutter machine.

Witness: Yes, sir, the Clutter type over there.

Q. Now, in the Osgood machine, did you see any—in this photograph, for instance, did you see any support such as this, mounted on the sheave, for supporting the sheave from the boom? Just compare that photograph and see if you can find any such feature.

Mr. Richey: Better show him that. Do you understand what he means?

Witness: Yes, I understand your support. No, you don't have that raise on top there.

Q. Now, you spoke this morning when you were on the stand about undercutting; you gave an example in which you would cut around a tree. Now, it seems to me that there was something, in thinking that over, that was not quite clear to me, and probably to the court. Will you tell once again just what you did in this cutting around the tree? A. Well, undercutting is practically—it is a place where you usually have to get your machine off the line, or say that you have a sewer or a line of that type, if you want to reach under a tree and not remove the tree, or anything. So as you come to this—

Q. Now, I believe it would be better, Mr. Morrison, if you would, instead of explaining the general operation of undercutting, if you would just explain what you

did in that particular case that you spoke of. You told, I think, or said that you undercut a tree; is that right? A. That is, cutting around trees or poles or where you couldn't set your machine in line.

Q. I am talking about the particular instances; I want you to tell the court about that.

The Court: Some particular instance.

Q. You said there was some particular case where you had done that, didn't you? A. No, I said not any particular case, but I said only in cutting around trees or poles, or where you have a stone in the ditch.

Q. Well, you have done that? A. I have done that a number of times.

Q. That is what I want you to explain. A. Well, as you start to run your machine off the line, which you have to do—

Q. You are speaking about the whole machine now? A. The whole machine; there is times when you are sitting at least three feet off the line.

Q. In other words, the trench would be right in the center of the front of the machine? A. Sure.

Q. But in your operation of undercutting, where it becomes necessary to do that, you move your machine over so that the trench is not— A. In the center.

Q. —in the center of the machine; is that right? A. That is right. You start your undercutting, and you throw your bucket according to what you figure you are off the line to make your undercutting and still be on the line of the ditch.

The Court: In other words, the trench keeps in line while the machine is off the line?

Witness: That is it.

Mr. Richey: The bottom of it is on the line, but the top curves around the pole.

Witness: That is right.

Q. And when you finish your trench you have a crooked line of the trench, your trench is not a straight line all the way through; is that right? A. Not at the top.

Mr. Corbett: That is all.

By Mr. Reed:

Q. Mr. Morrison, with reference to the General machine, you say you worked with that in Cleveland, or in that territory? A. In Akron, I have seen them work in Cleveland.

Q. What was the date of that approximately? A. Well, let's see—it was around '29; I think we started on the job the middle of May, around there.

Q. And the General was on the job then? A. The General was put on the job shortly after we started.

Q. And was the General a full revolving shovel? A. It was.

Q. And the Keystone that you were operating was a Model 4? A. A Model 4.

Q. And that is not full at all? A. Not full at all.

Q. As far as you know the Keystone manufactured a full revolving shovel at that time? A. No, they were talking of it, or getting the plans.

Q. And did this General machine have the upstanding links on the boom? A. Just what do you mean?

Q. The upstanding—this characteristic of the Clutter machine connecting the horizontal links with the boom? A. I don't believe they did.

Q. You understand what I mean, do you, now? A. Yes.

Q. And what was your answer? A. I don't think they did. I couldn't say for sure, for I didn't notice it at the time that close.

Mr. Reed: That is all.

Thereupon the plaintiff further to maintain the issues upon its part, called as a witness in its behalf HOWARD H. ELMIRE, who, being first duly sworn, testified as follows:

DIRECT EXAMINATION by Mr. Edgerton.

My name is Howard H. Elmire. I live at Arlington, New Jersey. I am 43 years of age. I am manager of the Eastern Sales Branch of the Keystone Driller Company, Arlington, New Jersey. As manager of the Eastern District for the Keystone Driller Company I have occasion to cover the territory and become familiar with the movement of competitors' excavating machines. I have seen a General excavating machine in operation and also an Osgood machine. I have operated these machines. The General and Osgood machines of the instroke ditcher type are capable of the same function and mode of operation as the Keystone Driller machine. I couldn't say to what extent I saw the General back hoe machine operated, but I have seen quite a few of them.

I would say I saw these machines operated in the period of the last four or five years. I saw them digging ditch with the pull scoop on, that is, oh, practically the same, practically the same operation with the Keystone of digging the ditch. I have seen them working in shale and that character of soil. As to operating a General machine myself, I have had a hold of them and run it some. I have never run one for a contractor, but I have handled the control.

As to the Osgood machine, I have seen it operated about the same length of time, four or five years, as near as I can recall; it may have been a little longer. I saw this Osgood machine operating around New York City. The soil I saw them working in was loam, sand, shale, rock—all kinds of formation. As to operating this machine, I have had a hold of it and run it at the controls. The machine shown in Plaintiff's Exhibit 25, the General catalogue, page 9, is practically the same machine as I saw them working around there.

The machine shown in Plaintiff's Exhibit 29, a catalogue of the Osgood Company, on page 20, I would say is practically the same machine that I saw. The machines I have seen I know that the attachments bore the same identification as indicated on Osgood Exhibit 29.

Referring to the General machine, the only operation or operating that I have done at all with the General would be if I would go around to the machine where the operator that was running the machine knew me, and he would say to me, "Well, here, try it." And I would go up and take a hold of the levers, and maybe take out three or four or a half dozen scoops full out of the ditch for him, cast it over on to the side, and then give him the machine again, and maybe I would stand there aside of him while he was operating for say half an hour or so, talking with him while he was digging. But I have never been hired by a contractor to operate either a General or the Osgood with the ditcher scoop.

Q. And would the same apply to the Osgood machine? A. Yes.

Q. You have operated that under the same circumstances? A. Yes, sir.

Q. Now, you are the gentleman that operated the machine yesterday? A. Yes, sir.

Q. At the demonstration? A. Yes.

Q. Will you compare in your own words the operation of this Keystone that you demonstrated yesterday, or one of the Keystone of the back hoe type, with that of the General and the Osgood?

Mr. Corbett: Your Honor, we object to that. We see no bearing in that, that it has in this case. It has no bearing in this case. It is a question of comparison, and if at all, it is a question of comparison of the machine of the patent with the machine of the Osgood Company.

The Court: You claim that this machine that was operated yesterday is not a machine that corresponds with these patents?

Mr. Corbett: Absolutely; entirely different from the patents, in a number of respects. We have shown some, and we will show more.

Mr. Edgerton: In those respects, Your Honor, relating to attachments and detail that haven't anything to do with the function.

The Court: Oh, I think we should take this testimony, Mr. Corbett. Of course, if you establish what you say you are going to, that just weakens his testimony, is all.

Mr. Williams: May I make an observation, Your Honor? What is the value of a comparison of those two machines? What we are charged with is infringing a patent, not copying a machine. Now, the machines may be very similar, may look identical, and yet the one will not infringe the patent covering the other.

The Court: Well, I think we will take the testimony, but, as I say, if counsel establishes that this machine is not one constructed in accordance with these patents, why that weakens his testimony to that extent, that is all.

Mr. Williams: As I see it, it is immaterial.

The Court: The machine certainly has some relation to these patents.

Mr. Corbett: It may have some relation, but the proper comparison, if at all, Your Honor, if we make that exception, is with the machine of the patent.

The Court: I will not rule it out on that ground; you can take your exception.

Mr. Corbett: Exception.

Mr. Edgerton: Do you understand the question, Mr. Elmire, or would you like to have it read?

(Question read.)

A. As to the digging, the operation of your scoop and boom is the same thing. They do the same class of

work. The machines, of course, back in your machinery part, that operates somewhat different, the machinery part, but as to the digging, your digging your material and the like, it works the same thing.

Q. Goes through the same excavating cycle? A. Yes, sir.

Q. In substantially the same manner? A. Yes, sir.

Mr. Edgerton: That is all.

Mr. Corbett: No cross examination.

(Noon Recess.)

(Afternoon session, Thursday, March 5, 1931.)

Mr. Richey: Do you want to ask Mr. Elmire or Mr. Morrison any more questions?

Mr. Corbett: No.

Mr. Richey: All right. We will proceed with Mr. Sessions then.

ROBERT C. SESSIONS, a witness for the plaintiff, was recalled to the stand, and testified as follows:

DIRECT EXAMINATION by Mr. Richey.

Q. Mr. Sessions, will you compare the machine you saw yesterday at the test at the coal yard in operation and achievements with the machines in the various patents in suit you have discussed?

Mr. Corbett: We want to make the same objection, on the ground that the machine demonstrated yesterday is not the machine of the patents in suit; therefore any testimony regarding those comparative machines is irrelevant and immaterial.

The Court: The objection will be overruled.

Mr. Corbett: Note an exception.

The Court: If you wish you may make a motion to strike the testimony after your testimony is in.

Witness: May I have the exhibits which show the photographs of those machines, and the catalogue of the photographs, both?

Mr. Richey: You had Exhibit 24, I think—is it not?

Witness: The Keystone pamphlet which is Exhibit 24, and the photographs, Exhibit P-39. The machine shown in the Keystone Company pamphlet, Exhibit P-24, that is the pull scoop or ditcher machine shown, is like the machine—of the machine shown at the demonstration yesterday, with the exception that the machine demon-

strated yesterday had an abutment piece or stop mounted on the stick on the inward face of the stick considerably below the pivot point between the stick and the boom. This abutment is mounted something like the sketch I am marking here. This stop which I am speaking about appears on the photographs of the model 17 machine, which is also the same type of machine, the same model as that demonstrated yesterday. The photographs are Exhibit P-39, and these stops are structural steel abutments fastened to the stick; and there was also on the machine demonstrated a wooden block attached to the stick immediately above the bail which connects the stick to the scoop. This wooden block serves to prevent the hauling bail to which the hauling cable is attached from damaging the stick proper when it swings up against there. These other stops on the stick which are the steel members merely prevent the stick approaching closer to the boom than a certain definite position. That furnishes a definite stop of the stick to the boom and prevents the connection between the hauling line and the bail attached to the front end of the scoop from riding into the sheave members and destroying the sheave and damaging the boom itself by this contact. Other than that the machine demonstrated, as I understand it, is like the machines shown in these photographs, Exhibit P-39, and the pamphlet, Exhibit P-24, in all particulars, as the machine consists of a boom mounted for vertical movement up and down; a stick pivotally connected to the end of the boom, the connection to the stick being on the inner side of the stick, the side of the stick toward the machine; the machine is of the type of the Clutter and Downie patents here in suit, in that it has a mechanical hoe or hole scoop, as it is called in this pamphlet. It has the bucket or scoop rigidly connected to the end of the stick.

The Court: As in this exhibit; that is what you want to say?

Witness: Both the machine of the pamphlet and the machine which was demonstrated have the same construction, and the machine shown in these photographs, in all of these particulars. I am now naming the points wherein the machines demonstrated—

Q. In general it operates the same and performs the same function of the machines in the patents in suit you have described? A. Yes, sir.

Mr. Corbett: Objection to that. In connection with this machine out there, we would like to have a couple of

our men see that machine and have certain parts of it taken apart. For instance, we would like to have the scoop removed. I do not know that Your Honor would be interested in going out there, but I am wondering if we can make some arrangements with the plaintiff to have someone go out there with them this afternoon and do that.

The Court: Suppose you talk to Mr. Richey about that.

Mr. Corbett: I am just speaking at this time—I did not know whether the court would care to go there. I doubt the necessity of it at this time.

The Court: You mean just to see it taken off?

Mr. Corbett: Yes, Your Honor. There are several features our men want to see which I do not believe you would be interested in at this time.

Mr. Richey: We will be very glad to do that when we can get our people away from the trial.

Mr. Corbett: I mean after the session is over today.

Mr. Richey: As far as I am concerned, it is all right, unless there are some practical difficulties. I will talk with Mr. Downie about it. I will be very glad to have you look at it and very glad to have the court go along, if you care to.

The Court: You are just going to take off the scoop?

Mr. Corbett: You may want to see it later. I don't believe it is necessary now. We want to have a more complete examination. The question of assembly enters into this thing. We would like to have a little better view of it than we had.

Q. Mr. Sessions, I now call your attention to catalogue and photographs of the General machine, Exhibits P-25, 26, 27, 28, 36 and 37. Basing your answer upon what you have seen of the machine of the General Company, and what you have heard of its method of operation and advantages and results of its operations from the witnesses Elmire and Morrison, will you compare the machine of the General Company as illustrated in those exhibits, in mode of operation and results, with the machines of each of the patents in suit which you have discussed?

Witness: The machine shown in these exhibits to which you have referred, and as I understand its operation from my observation and from the description of its operation, functions in the same manner as the machines of the patents in suit.

Mr. Richey: Pardon me, I want to add to that question, a comparison of structure as well as mode of operation and results.

Witness: And this machine accomplishes the same results. In structure the machine has the general characteristics of the Clutter patent, in that it has a boom mounted for vertical up and down movement, and which can also be swung in horizontal direction; it has a stick attached to the end of the boom pivotally connected to the end of the boom; and it has a scoop at the lower end of the stick; the mouth of the scoop and the teeth are pointed inwardly toward the machine; it has a straight bridle or link member, pivoted to the upper arm of the stick, and this upper arm is a short arm compared to the lower arm of the stick; this link connection or bridle of the General machine—the General machine has also the two power control lines of the machine of the Clutter patent. As far as the first Downie patent is concerned, the machine has the scoop rigidly secured to the end of the stick, and rigid in the sense it is required to accomplish the results obtained with these machines. It has its stick member made of two channel beams with their flanges facing each other; these channels are spaced apart; it has as a result of the construction a suitably long bearing between the stick and the boom; it has the drop bottom of the first Downie patent with the side rake teeth; the bottom is pivoted at the lower end of the lower front corner of the scoop; the bottom is latched at the rear and is capable of momentum closing; the side rake teeth cut sufficient clearance to clear the sides of the scoop and the machine is capable of single width cutting; capable of undercutting, and rooting in the various functions which have been described in connection with the first Downie patent. In connection with the second Downie patent, No. 1,543,250, the General Company's machine is shown in these various exhibits which have been referred to and as shown particularly in Exhibits P-36 and P-37, which are photographs of the General machine taken by me at Summerville, New Jersey. (Shown to the court.) The parts of this machine which serve as the abutments and function in the nature of the abutments of the second Downie patent are clearly shown. These photographs were not entirely clear and I have drawn over them with ink the outline of the parts as appeared on the photograph but which were difficult to see except on close examination. Exhibit P-36 shows

the connecting link or bridle in an upward position, with the stick slightly extended outwardly from the vertical. This shows clearly the slot or parts which have been cut away of the flanges of the channels which make up the stick. The termination of this cut-away slot is marked with the letter "B".

The Court: What do you mean, follows that cut-away?

Witness: Merely by a machine or tool which cuts it down in manufacture, in construction.

The Court: Yes.

Witness: This furnishes a shoulder against which the connecting links can contact. The contact of the connecting links on this shoulder is indicated by the letter "A", and indicates that a niche had been formed in the connecting links, which was very apparent on the machine, and is apparent in the photograph.

The Court: You mean that is caused by contact?

Witness: That is caused by repeated contacts of those parts. It is wearing there.

Exhibit No. P-37 shows the same machine with the connecting link or bridle in such a position when the stick is swung inwardly; this stick has now been swung inwardly toward the machine so that the connecting link has come in contact, and these abutting parts are now in contact and will function as described in the second Downie patent, to throw the line of tension or line of pull of these sheaves out of its normal position upwardly and in that manner keep the links from coming on dead center position and prevent the development of the blind spot. The links themselves are in every sense the full equivalent of the links shown in the Downie patent, and, functionally they are equivalent to the linkage of the Clutter patent. The abutments—

Mr. Reed: Pardon me. The question of equivalency is a question for the court. You may make a comparison as to structure.

The Court: The court will so regard it.

Witness: The abutments function in the same manner and accomplish the same result as the abutments of the second Downie patent, and as shown on the model, Plaintiff's Exhibit P-17, they function to limit the angular approach of the stick to the connecting arm or link or bridle and prevent the blind spot as it has been called.

As far as the third Downie patent is concerned, the General machine is almost an exact copy of the structure shown in this patent, that is, the connection between the stick and the scoop. The machine employs a channel or flanged piece which comes up against each side of the bottom end of this stick, which corresponds to parts 25 of Downie patent 1,709,466; the end of the stick has a footing attached to it which serves as a solid footing 27 of the third Downie patent; bolts, as shown very indistinctly in this drawing, this photograph, but which can be seen, are used to attach the scoop to the stick, these bolts correspond to bolts 28 of the third Downie patent; the structure employs the rear bracing members which are connected to an angle-shaped piece at the back of the scoop by bolts, which correspond to the bolts 32 of the third Downie patent; the structure is such that the bolts are subjected to tension and not to shear in the same manner as the bolts of the third Downie patent; and the structure is adaptable to accomplish the same results of the third Downie patent in making readily interchangeable scoops for the stick.

The fourth Downie patent, 1,716,432, is used and shown most clearly in photograph of Exhibit P-27. This shows on photographs F and G, and these side rake teeth on this General machine have a material penetrating point which corresponds to the point 19 of the patents. They have a shearing face or edge which slants at approximately 40 degrees to the horizontal, corresponding to the shearing edge 21 of the fourth Downie patent; they have surfaces which tend to cause the material to be forced inwardly into the scoop, corresponding to the surfaces 22 and 24 of the fourth Downie patent; these teeth are bolted.

The Court: When was this photograph taken? You took that?

Witness: I took this one.

The Court: Do you know when it was taken?

Witness: Yes, sir, I can tell you. (Witness refers to document.) These photographs of this General machine were taken by me January 21, 1931. The teeth are fastened to the sides of the scoop and not to the drop bottom; the pivot bolts pass through the center in the widest part of the teeth as shown in the Downie patent as bolts 14 which pass through the holes in the teeth of the fourth Downie patent which are marked 23. These same teeth are shown in Plaintiff's Exhibit P-28, particularly on

sheets marked 10 and 13. The general features of these patents in suit, they exist in the General Excavator Company machines as shown in these catalogues and photographs.

Q. I now call your attention to photographs and catalogue of the Osgood machine, Exhibits Nos. 29, 30, 31 and 32. Based upon your observation of this machine, and what you have heard about the operations as testified to by Mr. Elmire and Mr. Morrison, will you compare the Osgood machine shown in these exhibits, in structure, mode of operation and results with the machines of each of the first four patents in suit?

Mr. Corbett: Your Honor, we object to that. He is asking this witness to compare the Osgood machine as to structure, results and mode of operation, when the witness has admitted he has never seen the machine in operation, and is attempting to base that on hearsay evidence produced by the witnesses Morrison and Elmire. They practically said nothing about the operation of the machine except that they operated the same. This witness has never seen this machine operate and he is not qualified to state what the functions of that machine are. Merely a general statement by these previous witnesses that it operates in the same way does not give him a basis to answer that question.

The Court: What do you say to that, Mr. Richey?

Mr. Richey: They said that the Osgood machine operated the same and performed the same functions as the machine we all saw operate yesterday including this witness. There is a description of the operation and functions of the Osgood machine. Now, based on that, I contend I can ask this witness, as an expert, a hypothetical question, asking him to assume that the machines shown in these exhibits are operated as those the witnesses said, to compare that with the operations of the machines of the patent.

Mr. Corbett: Your Honor, the witnesses merely said that the machines operated the same. That does not even give this witness any information. If he is going to testify about the functions and manner of operation of these machines, he has got to see how these machines do it. He cannot do it intelligently otherwise; and we object to it.

The Court: Well, I think he can testify hypothetically. Suppose all your machines were destroyed.

Mr. Corbett: That might be a different matter. That might be the best evidence. In this case all the machines are not destroyed. If he is going to testify about this, we submit he should have seen the machine in operation.

The Court: I think, being an expert, he can testify hypothetically.

Mr. Corbett: If he is going to testify about the operation of this blind spot, and these various other features, he does not know what actually occurs. The witnesses said nothing about that, Your Honor.

The Court: No question has been asked about that yet either.

Mr. Corbett: He asked him to compare the function and operation.

The Court: As far as these witnesses have testified, I think this witness may take that and answer the hypothetical question. Object to the different questions as we go along. Go ahead, Mr. Richey.

Mr. Corbett: Note an exception.

The Court: Is there anything before the house now?

Mr. Richey: Yes, I asked him the same broad question with respect to all the patents.

The Court: I suppose your question is too broad.

Q. Suppose, Mr. Sessions, you answer the question, first, with respect to the Clutter patent?

Mr. Corbett: I don't know whether Your Honor got that question fully, did you, the previous question?

The Court: No, I have not, now.

(Question read)

The Court: What is your objection to this particular question,—too broad?

Mr. Corbett: On the ground that this witness has no knowledge of the operation or functions of the first machine when he has never seen it. Furthermore, these witnesses who testified gave no information about the operation of the machines except to say they are the same in function.

The Court: The witnesses testified the first machine operates the same as the machine seen yesterday, is that not so?

Mr. Corbett: That is a general statement as to what they did. It dug dirt. That is about all they said.

Mr. Williams: It was a very general question and a very general answer.

Mr. Richey: Well, he told what they did.

The Court: Of course this witness' testimony will not have the force of testimony of a witness who has seen the operation of the Osgood machine, and not as strong as one who operated the Osgood machine; but I do not think it is irrelevant because he has not operated the machine or seen one in operation, in view of the fact that he is an expert. He knows how these other machines operate; knows how this machine is constructed; and he is assuming that what these other witnesses said this morning is true. It seems to me his testimony is competent. Go ahead.

Mr. Corbett: Note an exception.

Q. Will you answer that question which was read to you, the first question about all the patents? A. Yes, sir. Referring to the exhibits mentioned in the question and in connection with the Clutter patent 1,317,432, I find that the Osgood machine consists of a boom mounted about a pivot at its lower end for vertical up and down movement, and adapted, because of its mounting on a rotating carriage, to be swung in a horizontal position. This boom has connected to it at a pivot point at its extreme end a stick which carries rigidly secured to its lower end a scoop which has its open end projecting inwardly towards the machine; the upper end of the stick, which is a shorter section than the lower end of the stick, and considerably shorter, has pivoted to its outer face links or a linkage which carries a sheave to which the hoisting line is attached; the hauling line is attached to a bail mounted and attached to the front open end of the scoop. The machine may be controlled in its digging operations entirely by these two lines. The scoop is capable of swinging outwardly into approximate alignment with the boom, that is,—I stated that incorrectly—the stick with the scoop at its end is capable of swinging outwardly so that the stick comes in approximate alignment with the boom; that is, the machine is capable of moving the scoop through 180 degrees, as is the case in the machine of the Clutter patent. The machine is capable of cutting a single width trench. In general, the machine has the qualities which make it capable of accomplishing the results accomplished by the machine of the Clutter patent, and operates in the same manner.

As far as the first Downie patent is concerned the machine has, as I have described, in connection with the General machine, has a bucket rigidly mounted on the

end of a stick; the stick is made up of two channel members with their flanges facing inwardly. This view "B" of Plaintiff's Exhibit 30 is looking at the uppe. end of the stick. This stick consists of two channel members with the flanges facing inwardy in the same corresponding positions of the channel members of the stick of the first Downie patent. The machine side of the stick is covered with a third channel member and a plate at its upper end, and the outside of the stick is covered with a plate which holds these channel members in spaced apart relationship. This channel and place may be seen by examining photograph "J", Plaintiff's Exhibit P-31, and the channel on the inward side here of the plate on the back is seen right along the back side; the machine has a long bearing at the point which connects the stick to the boom; it has a drop bottom, that is, the bottom may be opened and is pivoted at the front lower end of the scoop; it has a latch which is used to hold this bottom in position; the machine is capable of a momentum closing of the bottom; the machine has side rake teeth as described in the first Downie patent.

Mr. Corbett: If I may interrupt, pardon me, Mr. Sessions, we had copies of these photographs and we have not got the letters on them, and Mr. Sessions is referring to "J" and various things like that.

The Court: Take a little time and clear that up.

Witness: I think I can go on without referring to those particular photographs.

The Court: You had better wait.

Witness: All right.

(Counsel compare various photographs with witness.)

Witness: The Osgood machine has a hauling line and hoisting line and in general corresponds structurally and functionally, as I understand it, to the machine of the first Downie patent, 1,511,514.

As regards the second Downie patent, 1,543,250, the parts in this connection are rather indistinct on the photographs and catalogues, and the sketch P-38 shows more distinctly the parts which are shown not so definitely in the photographs P-30 and P-31, and the catalogue Exhibit P-29; although these marks may be made out on these photographs and catalogue exhibits.

I will refer to the sketch P-38. The stick is so marked. The channel member on the inside face of the stick has been cut away to show how it spans the two channel mem-

bers forming the stick; it extends up above the pivot below connecting the end of the boom of the stick; the links or bridles, which correspond to the linkage 15 of the second Downie patent are shown here and are marked "link"; the hoisting line is shown running over the sheave which corresponds to the sheave 18 of the second Downie patent. The parts are shown in such a position that the stick has approached in angular relationship to the connecting link or bridle, hence to such a degree that the bridle had come in contact with the upper corner of the edges of the channel member which spans the inside or machine side of the stick. This contact will serve to throw the links and sheaves up and away out of the line of tension or line of pull which is shown as a blue line on this sketch, Exhibit P-38, and in that manner functions as the stops 23 and 24 of the second Downie patent to prevent the formation of the blind spot. The catalogue Plaintiff's Exhibit P-29—in the view marked No. 3 which bears the legend "Osgood Gasoline Back Hoe Engaged in Excavating a Section of the New York Subway. Moranti and Raymond, New York City, are the owners." It may be seen that these abutments have the function they do in the second Downie patent. The line of tension between the point on the mast to which the cables are tied, and the point to which this force acts at the pivotal connection between the links and bridle and the top end of the stick is in such a position that the pivot point of the sheave, which corresponds to the point 17 of the second Downie patent, has been displaced and the point of application of force is thrown off of the dead center position, and the blind spot will in that manner be eliminated. That shows that these parts do function in the manner as explained in the second Downie patent.

In connection with the third Downie patent, No. 1,709,466, the Osgood machine employs a structure which is practically the same in all respects to the structure of the General machine and the machine of the third Downie patent. It has the flanged angle pieces corresponding to parts 25 of the patent which provides a receptacle for the lower end of the stick, and prevents the stick turning and wearing against the top face of the bail member across the top of the stick; it has footing pieces attached to the lower end of the stick connected by bolts which correspond to the bolts 28 of the third Downie patent; it has a bracing member connected from a point on the stick midway, approximately between the lower end of the

stick and the pivot point of the boom, or at least above the bottom of the stick, to form a brace, and this brace member is connected to bent angle-shaped pieces at the back, and the scoop attached by bolts corresponding to the bolts 32 of the third Downie patent. This construction is such that the scoop may be readily changed, and the change may be accomplished quickly and effectively, and the bolts will not be subjected to shearing stresses, but will be subject to tension stresses which will not cause them to wear and become loosened so readily.

Q. Which, if any, of these photographs of the Osgood machine which you have been discussing did you take yourself? A. I took the photographs which are marked Plaintiff's Exhibit 30. These photographs were taken by me at Youngstown, Ohio. They show the boom and the stick and the scoop connection to the stick; but the parts are not mounted on the machine and are lying on the ground.

Mr. Richey: That is all the direct examination.

CROSS EXAMINATION by Mr. Corbett.

I am 33 years old. I graduated from college in 1919. I worked for my father five years. I had a scholarship in Sweden for one year; and then I worked for my father from 1920 to 1925. Then I was connected with Steel & Tubes, Inc., formerly the Elyria Iron & Steel Company, Cleveland, Ohio, from 1925 to June of 1930. At that plant I was doing engineering work and patent work. I was continuously involved in their patent matters, patent litigation, patent applications, examination and study of patents of all classes, and in general engineering work in the design of machinery, equipment, in the plant, and handling materials. I was for the last year with them with the title of general engineer and in charge of the engineering and experimental division of that company. They have plants in Cleveland, Brooklyn, New York, and formerly in Toledo, and Elyria, Ohio, and in Ferndale, Michigan. They made steel tubing, hot and cold rolled strip steel, and fabricate various parts.

Q. I wish you would refer to the second Downie patent, No. 1,543,250, and read it to the court.

The Court: Which is that, the first Downie patent?

Mr. Corbett: That is the second Downie patent; and read to the court the paragraph beginning on line fifteen, on page one, of the specification of this patent.

The Court: Where is that line 15, on what page?

Mr. Corbett: Page 1. I would like to have him read it.

Witness: "The object of the present invention is to provide an improved construction, which will permit a much greater latitudd in positioning or spotting of the loaded scoop when elevated as for dumping, and to permit greater positiveness and accuracy in controlling the position of the scoop within that range than is otherwise feasible."

Q. In explaining this Osgood structure to the court you referred to picture No. 3 of Plaintiff's Exhibit 29, is that right? A. Yes, sir.

Q. Coming back to this paragraph which you have just read, I would like to call your attention to the fact that that paragraph indicates that the purpose of these stops or abutments is to permit a much greater latitude in positioning or spotting the loaded scoop when elevated as for dumping? A. Yes, sir.

Q. Would you say that the Figure 3, in which you point out a possible bend in the line, in the hoisting line, and the link represents that shovel in an elevated position for dumping? A. May I see the picture? (Shown picture.) In view of the fact that this picture was taken above its elevation looking downward, it is very difficult to say how high that scoop is above the ground right now; but this picture shows that these abutments function in the manner of the abutments of the second Downie patent, and they will then function as I understand, and am able to understand from my observation of the Keystone machines, and of these models; in fact, they show the same thing very well; these abutments will function in any position of the boom.

Q. You certainly do not contend that picture shows that boom elevated and scoop elevated for dumping, do you, in that figure, picture 3? A. It does not look as though it is elevated high enough for dumping, no. It is difficult to say because of the shortening of the distances looking downward. Picture No. 1 on the very first sheet of this exhibit shows this machine high enough for dumping, I should say, into a fairly ordinary type of truck.

Q. But you do not see any bend in that line in that picture, do you? A. In that picture the position of the stick is such that it is just starting to position toward the scoop at which these abutments start to function, and as the stick is moved further inward and the scoop is

moved further inward towards the machine the abutments will function to create the results desired and the operations explained in the second Downie patent.

Q. You realize, do you not, that that boom also elevates under those conditions? A. I do not understand your question.

Q. When you pull on the hoisting line you not only affect the stick but you affect the boom, do you not? A. I did not say anything about pulling on the hoisting line; I said if the scoop is pulled by the hauling line any further toward the boom, those conditions would result at this particular elevation of the boom.

Q. As far as that picture is concerned you will acknowledge—picture 1, Plaintiff's Exhibit 29—that that picture shows the scoop a substantial distance off the ground; and that there is no bend in the line which is made up by the hoisting line and the linkage, and the linkage carries the sheave; do you acknowledge that? A. These parts are all so nearly in alignment it is difficult to say they are out of alignment. I would say they are in approximate alignment in this picture. The scoop, however, is not.

Mr. Corbett: That is enough, Your Honor.

Witness: At its inward position.

The Court: They say you have answered the question.

Q. Mr. Sessions, just what actual experience have you had with excavating machinery? A. I have observed their operation.

Q. Have you ever operated a back hoe? A. No, sir.

Q. Have you ever operated any kind of excavator? A. No, sir.

Q. How much have you observed the operation of excavating machinery? A. I have observed them as a matter of general interest for a good many years. Just in the past three months I have been studying them very closely in connection with my preparation for this case.

Q. But up until about three months ago you had never had any occasion to study excavating machinery any more than a casual interest, is that right? A. That is true.

Q. What would you say was your study during the past three months; about how much time did you give to the actual observation of these machines working, excavating machines of the back hoe type? A. In operation I do not suppose more than one day.

The Court: That is the actual operation of what?

A. While the machines were operating, the operations of these machines I have seen them on different occasions, but altogether I imagine it has been about one day's time.

Q. Did you ever see the machine of the Clutter Patent 1,317,431, operating? A. No, sir.

Q. As far as the actual operation of that machine is concerned, you do not know from actual observation how far that ditcher stick will—how nearly that ditcher stick will approach a position of alignment with the boom in its outward throw, do you? A. Not from operation of the machines. I have constructed and observed models made exactly to the dimensions of the patent drawings and the model which is an exhibit in this case.

Mr. Richey: P-15.

Witness: Made accurately to scale.

Q. You mean you have observed models of the boom and the ditcher stick and scoop such as are shown in Plaintiff's Exhibit P-15, is that what you mean? A. Yes, sir.

Q. Do you know who made that model or who had it made? A. No, sir, it was made some time ago I understand; according to my understanding it was made under the supervision of Mr. Downie.

Q. And you did not actually lay out the dimensions for the model, did you? A. Oh, no.

Q. Have you ever seen the device of the first Downie patent, No. 1,511,114, that is, this device minus the stops or abutments in actual operation? A. No, sir.

Q. Have you ever seen it at all? A. No, sir, not a commercial machine—I assume you mean exactly in accordance with the specific details of the structure shown in this patent.

Q. Well, substantially? A. I have seen this machine of the same parts, the same parts which structurally are such that they function in the same manner in the machine which was demonstrated to the court.

Q. But that machine had the stops on it, the abutments? A. That machine had stops on it.

Q. And you will note that the first Downie Patent 1,511,114, does not have these stops upon it? A. Correct.

Q. You have never seen that type of machine either built or operated, is that correct? A. That is correct.

Q. Did you ever see the machine of the second Downie patent, 1,543,250—now I do not mean the machine shown at the demonstrating block the other day?

A. Well, I assume you mean the machine shown in one of these earlier Keystone catalogues?

Q. Yes? A. The machine before this present model machine of the Keystone Company?

Q. Yes? A. No, I have never seen one of those machines. I have seen a General Excavator machine in operation with the stick and scoop and link mechanism of the Keystone machine, of this particular Keystone mechanism.

Q. You mean you saw the Keystone attachment applied to a General Excavator machine; is that what you mean? A. Yes, sir.

Q. Did that have stops or not? A. No, sir, that particular machine I saw did not have the stops; that was minus the stops; on that construction the stops were not in use.

Q. You were at the demonstration yesterday; the soil in which that machine operated was unusually soft, is that not correct; that is, more than the average soil? A. I am not familiar enough with soils. It looked pretty hard. It was full of bricks, old iron, tin cans.

Q. It was filled in cinders, was it not? A. No, sir; it was dump when we get down far enough.

Q. It was so soft, anyway—pardon me—I did not mean to interrupt you—it was so soft in attempting this so-called undercutting, the bank caved in, is that not right? A. Yes, sir; I saw where the bank caved in after the undercutting had taken place.

Mr. Corbett: That is all, Your Honor.

Mr. Richey: Have you a harder lot you would like to have us dig in?

Mr. Corbett: I would like to have your machine in actual working condition, if the Judge will look at it.

Mr. Richey: You hire the lot.

Mr. Corbett: Not a lot.

The Court: I did not get all of that.

Mr. Richey: This talk about these abutments out here sounds like a quibble to me. He picks something which happens to be integral with this machine. Also, this lot was the only one we could get; we could not find any place around here where there are any rocks to be dug in; it seems all the soil in the neighborhood of town here is more or less soft. You have to go a good distance away to get shale. I suggested to my brother here if he had another lot with harder soil he wanted us to dig in, we would be glad to.

Mr. Corbett: First, I will not agree with Mr. Richey that this stop is a kind of quibble. I am going to show before we finish we have not any quibble. But as far as the demonstration is concerned, as I said before, we feel that you cannot actually show the working principles of a machine of this type in any fifteen minutes demonstration; particularly when you claim with great emphasis, the plaintiff has claimed with great emphasis—more emphasis I think in the Cleveland suit—that this is a rock digging machine; and then they dig in about as soft ground as you can find. I just said to Mr. Richey if he wanted to arrange a demonstration under real working conditions, where the machine could work a half a day, to see what happens, we would be glad to meet him there, if Your Honor thinks it necessary.

The Court: You gentlemen know more about this case than I do.

Mr. Corbett: When we finish we will renew our offer.

The Court: Renew your offer of what?

Mr. Corbett: To demonstrate these machines under actual working conditions for a substantial period of time.

The Court: Whenever you demonstrate them I will look at them. It is up to you men.

Cross Examination by Mr. Reed.

I took the photographs of Exhibit P-27. That is the machine I saw in actual operation at Summerville, New Jersey. It was doing commercial work in deepening a waterway. It had been in operation on that job, as I understand. When I observed it, it was merely operated to show the function and operation of the machine. It was off to one side. It was merely a demonstration for my benefit, by an operator of the owner. He said he had been operating for some two years, I believe, on that job.

Q. You pointed out some similarities between that machine and the General machine; but as to this brace connection I did not follow you clearly. How is that brace connected with the scoop? A. The brace connected to the back end of the scoop?

Q. Yes, that is what I mean? A. That brace is connected to a special casting or forging which is constructed so as to have two approximately horizontal ledges. One of these ledges is connected to an angle clip which is fastened to the back side of the scoop and

goes up to the ledge and making a rigid connection in that manner. The casting or forging itself is connected in this machine by bolts to the bases, sides, of these angle braces. The other approximately horizontal ledge of this casting rests over the rear top corner of the scoop and the bolts pass through it and through the top of the scoop to hold it in place there.

Q. You have been referring to the prints of Exhibit P-27 marked H? A. Yes, sir.

Q. Are there any tension bolts used in connection with those braces with the rear end of the scoop? A. Yes, sir.

Q. Can you point these tension bolts out on this print? A. Do you want me to mark them?

Q. Yes, I should like to have you mark them if they are there? A. The tension bolts are very difficult to see on this print. I see them and I can mark them on the print.

Q. Are you relying on recollection of those tension bolts or what is shown in the exhibit? A. I can see them indistinctly in the exhibit and I remember what they were.

Q. You are positive there are tension bolts on there? A. Yes, sir.

The Court: Here; see if you can find them with that. (Magnifying glass).

Witness: I do not think I need that (witness uses glass and refers to book).

The Court: We will take a five-minute recess.

(Recess)

Witness: Shall I continue with the answer?

Q. Continue with the answer, yes. A. I find it is very difficult to see the bolts to which Mr. Reed is referring, in the enlarged photographs which are Plaintiff's Exhibit P-27. However I have here the photographs of the negatives from which these were made, the original size.

Mr. Reed: Those are not in evidence?

Mr. Richey: No. I will put them in. Mark them Plaintiff's Exhibits P-40 and 41 and refer to those numbers.

Witness: P-40 corresponds to sheet H of Exhibit P-27. P-41 corresponds and is the same picture, except not enlarged, as sheet I of Plaintiff's Exhibit P-27. Ex-

hibit P-41 shows the bolts which Mr. Reed asked about: two bolts, which correspond to the bolts 32 of the third Downie patent.

Q. Can you mark those bolts on the exhibits so that they will be apparent? A. I will draw lines to them because if I mark over them they would no longer be apparent.

The Court: Are those the ones you refer to, those 28's there (referring to large drawing on easel)?

Witness: No, sir. The bolts 28 are bolts of primary importance in connecting the stick to the scoop. These bolts we are now referring to correspond to bolts 32, which merely connect the rear bracing member 29 to the rear of the scoop.

The Court: Were you asking about those, Mr. Reed?

Mr. Reed: Yes.

The Court: All right.

Witness: I will mark those bolts shown on Exhibit P-41 with the reference letter A. Exhibit P-40 also shows bolts, which correspond to the bolts 28, more clearly than are shown in the enlarged photograph sheet H of Plaintiff's Exhibit P-27. I believe that these same bolts are also shown in the photograph sheet M of Plaintiff's Exhibit P-28 (shown counsel). Two bolts are shown as in the other exhibit. These bolts correspond to the abutments 32 of the patent drawings of the third Downie patent.

Mr. Reed: That will be all.

Mr. Richey: I will offer those photographs in evidence as Plaintiff's Exhibits P-40 and P-41.

The Court: Very well.

Mr. Richey: And if I have neglected to formally offer in evidence any of the exhibits from P-1 to P-41, I now offer them in evidence.

The Court: As I understand, Mr. Richey, all of your exhibits are in. As to some of them counsel have reserved the right to object at some later time.

Mr. Richey: Yes.

The Court: That is the way I understand the record.

Mr. Richey: That is all, Mr. Sessions. In response to Mr. Corbett's request to go out and take our bucket

off our stick and then extend the stick out, we are agreeable to that. We will all go out there after the hearing. If the court wants to go, we will be very glad to have him go.

The Court: I do not think it will be very helpful to me to see it.

Mr. Corbett: If Your Honor is going to see it taken apart at all, it will be better to wait until after our witnesses have discussed it.

Mr. Richey: Mr. Corbett has been courteous enough to agree if we want to put any testimony in regarding that work we may do so and consider it a part of our prima facie case. Otherwise our prima facie case is closed.

The Court: Your prima facie is closed?

Mr. Richey: Yes.

DEFENDANTS' CASE.

GEORGE GREEN, a witness called by the defendants, being first duly sworn, testified as follows:

DIRECT EXAMINATION by Mr. Corbett.

My name is George Green. I was born in 1898. I live in New York City. I am an engineer. I have been familiar with excavating machinery from 1914 to 1931. From 1914 to 1917 I was a fireman on a shovel; from 1917 to 1931 I was an engineer and operator.

The Court: You mean an operator of a shovel?

A. Yes, sir.

(Narrative continued) In that time I have operated back scoop, back hoe, and then the straight steam shovel, clam-shell, orange peel, drag line and skimmer scoop. When I speak of operating a shovel, ordinarily I mean an outstroke shovel; that is, the legitimate shovel. When I speak of a back hoe, I mean the type where the machine digs in its movement to the machine. I have operated Keystone back hoe machines. I operated this type of machine from the latter part of 1917 or 1918 until 1926; on and off, not continuously. I have operated an Osgood back hoe for about five years. The first type of Keystone which I operated was similar to that one over there on the table.

Mr. Corbett: The witness refers to Plaintiff's Exhibit P-15.

Witness: No. 3 I believe they call it, Keystone No. 3.

The Court: That is the Clutter patent?

Mr. Corbett: Yes.

(Narrative continued.) I have operated the later model No. 4, almost similar to Plaintiff's Exhibit P-17. The difference in a general way is that it did not have those stopper blocks up there.

Mr. Corbett: The witness refers to the stop blocks or abutments on the sheave link at the top of the ditcher stick.

Q. As I understand it, you used two types of Keystone back hoe, is that right? A. No, sir; I should say three; I have had that type too.

Q. You have used a type which embodied those stops or abutments on the link at the top of the ditcher stick? A. That is right.

Q. You were in court this morning when Mr. Morrison was discussing the question of undercutting, were you not? A. Yes, sir.

Q. And I think you were here when Mr. Downie was on the stand part of the time? A. I was here. I did not hear it. I am hard of hearing.

Q. You did not hear what Mr. Downie said; but you understand in substance what Mr. Morrison said about undercutting, do you? A. Which is Mr. Morrison?

Q. He was the operator from Akron. A. He spoke but I did not hear him.

Q. I wish you would tell the court what you know about undercutting as the desirability of it or the nondesirability of it? A. Well, in the east you might say we have three types of ground: sand, hard pan and rock. You would not dare use undercutting in sand for the simple reason if you start to cut under a bank the bank will cave in, similar to what we had in the demonstration yesterday. Hard pan, unless you went down there with a laborer and cut a piece of the bank to get a hole in you could not cut it.

Q. If you go to undercut in a trench in which you were going to place a pipe, would that be desirable as you understand the situation? A. No, sir. They would stop you in New York; an inspector would not let a man go down in a trench that had been undermined underneath.

Q. Why not? A. It is dangerous cutting out at the bottom; it weakens the top.

Q. As Mr. Morrison said this morning—and I think I state it correctly—that he has performed the operation of undercutting and he described it as, first, when he was approaching a tree, setting his machine to one side and cutting around that tree. Would you call that undercutting? A. No, sir, absolutely not.

Q. Would you say that that was good practice or practice that would be acceptable in the digging of trenches? A. Undercutting?

Q. Digging in the manner described by Mr. Morrison? A. That is about the only way you could run around a tree, a telegraph pole; move the machine over to one side.

Q. You do not call that undercutting? A. No, sir.

The Court: What do you call that?

A. That is just in the regular course of the day's work. When you run into an obstruction, move the machine to one side and continue on by there. The rest of that stuff left there has to be thrown back by hand.

Q. You mean the stuff you cut out has to be thrown back by men? A. Yes, sir; wherever you have left off and started off the other side of that obstruction; if there is something in the way there, a tree, house, telegraph pole, you have to start back of that.

Q. As I understand what you say, if you came to a tree you would cut up a certain distance from that tree, stop and go around the other side of the tree and start cutting? A. Yes, sir; if the tree is right in the center of the trench or in the way of the boom. Sometimes if it is only roots in there you could go right by it.

(Narrative continued.) As to the matter of digging rock, solid rock cannot be dug with a machine; outside of a little rotten rock, one per cent of it; it might dig that. In the first place I have never seen a machine stand the abuse of digging solid rock. I have operated a Keystone machine, and have attempted to dig solid rock with it, until the contractor would fire me or tell me to stop. This was objectionable to the contractor because no machine I know of would stand the strain of digging in solid rock. It would for five or ten minutes; but it is not what you do today but what you do at the end of the month. It would break the machine. On the

Keystone machine, I will point out on the model here parts that would be likely to break. One of the weakest parts would be this pivot casting here. The size of this casting on the Keystone machine is possibly two inches in diameter. Either that, or one and three-quarter inches.

The Court: That is the pivot which attaches the boom to the stick, is that right?

Mr. Corbett: Yes. That is what he said.

(Narrative continued.) The other parts of the Keystone machine that would suffer from digging solid rock, are these plates here? I have seen them bend six inches out of line. I have done it myself.

Mr. Corbett: The witness indicates plates at the end of the boom which are connected to the ditcher stick.

(Narrative continued.) Other parts which would be likely to break on this machine would be the teeth here; the bolts would shear off first and the teeth would crack. The cost of the bolts for those teeth in the center is about one dollar apiece. There are three bolts to each tooth. Just how many teeth is according to the width of the bucket. Some have two, some five or six teeth.

Q. Have you any idea as to the relative cost of repairs on one hand if you attempt to dig solid rock with the cost of dynamiting that rock? Can you give the court any idea about that at all? A. Well, the contractors I worked for, and those I have met in my line of work, tell me that the average repair bill was——

Mr. Richey: I don't believe he ought to testify what he has been told. You do not mean to ask him that. Say what you know of your own knowledge.

Q. Do I understand you to testify that the use of this machine in digging or attempting to dig solid rock would result in the breakage of some of the bolts which connect the teeth to the scoop; is that right? A. It would cost more to repair the machine than what you would get for digging the rock; that is time lost, delays, repairs.

Q. Have you any idea about cost in breaking this rock by dynamite in comparison with the cost of those repair parts?

Mr. Richey: Should we get his idea on that? Is that not too far afield? Should he not know what he is testifying about?

Q. Only answer so far as you know about this matter. A. In regards to—

Q. As to the comparative cost of dynamiting with the cost of breaking tooth parts? A. As I understand it, it would be a whole lot cheaper to blast it than to take and try to jab it out. It would break the machine.

Q. Most of these contracts are taken on the estimate of cost and you have to keep within a certain cost? A. You bid a certain price for your work.

Q. In the case of the drop bottom bucket, how about the question of the pivots upon which the drop bottom swung; would you say they would stand up under the digging of solid rock? A. No, sir.

Q. What is the approximate size of those pins in diameter? A. I should say probably 2 inches, 1¾.

Q. You have spoken, I think, unless I am mistaken, of rotten rock, or suggested that it might dig rotten rock. Can you say about what percentage of rotten rock you would strike? A. We have encountered, in all the years I have been at it, one per cent., total amount we excavated.

Q. That is, of the rock you excavated, about one per cent. of it might be rotten rock? A. We could dig out, yes.

(Narrative continued.) The practice is when you strike solid rock, is to use a jack drill; drill holes through the rock, and then dynamite it. In New York City, the city is practically underlaid with rock. In some places it is near the top and in some places it is down quite a distance.

Q. Something was said here about the use of this Keystone device as a back filling device. What have you to say as to the custom with regard to the use of the Keystone back hoe as a back filler?—Does Your Honor understand the back filling?

The Court: Putting the ground back into the hole?

Mr. Corbett: Yes.

The Court: Yes.

Q. Go ahead. A. The back filling, we have tried it a few times with a back hoe, but we found it an advantage to take that arm bucket off and put the skimmer scoop on; stay on solid ground; push the dirt in the hole.

(Narrative continued.) When you back fill with the Keystone excavator, the machine stands on one side of

the trench and the bucket reaches out across the trench and pulls the dirt to you into the trench. The disadvantage about this practice is, if there was a deep cut, ten, fifteen or twenty feet deep, putting the weight of the machine like that on the bank, the bank is liable to cave in. There is always that possibility. It has happened a number of times. It happened with me.

Q. Mr. Downie testified here at considerable length that in digging rock, or in digging exceptionally hard material, that he performed what is known as a picking action; and he said that the custom was, in performing this picking action, with the Keystone back hoe, to elevate the scoop with the points down to a height—well—anywhere between three feet and six feet. Possibly he said more. Anyhow we will say he said four feet above the ground, and to let the scoop drop by its own weight, plus a part of the weight of the stick, without any restraint from the hoisting line. Is that in your experience the way in which these back hoes are ever operated, to your knowledge? A. Take that model there, lift that bucket five feet and drop it down without trying to hold it, with the old machine with the bow heel on top, she would have a tendency to swing one way or the other.

Q. Do you consider it important to hold a control on that line when dropping your scoop? A. Yes, sir. It had a different control than what they have on this new type.

Q. Mr. Downie also said that in effect this was a gravity blow by the Keystone excavator—he made quite a point of the matter of retracting, pulling in, the hauling line, which is this line indicated, just before the point of the scoop struck the ground. Would you say that that was an operation that is frequently used by operators? A. If a man is reckless about a machine and does not care about expense, he could do that.

Q. What happens to this Keystone excavator back hoe with regard to the pivots after you have used it for quite a while? A. Which pivots do you mean?

Q. The pivots of the drop bottom.

Mr. Richey: Had you not better limit him to his own knowledge and experience?

Mr. Corbett: I am asking him of his own knowledge and experience. You understand you only answer what you know.

Witness: That is all I am doing. It would be the same thing as dropping the bucket four or five feet. The

strain would be all here. (indicating) It would fall right in that latch.

Q. Do these pivot pins wear to any extent? A. I have seen them egg-shaped in three or four days because of the condition of the digging.

Q. When they wear how does that affect the continued operating of the back hoe, the scoop? A. We have that trouble—the door would keep open and we had to build straps here to keep the door closed.

Q. In other words, when the pivot pin wore, the latch would open when you struck the point of the teeth into the ground? A. Yes, it would drive this door back and away from the latch.

The Court: On what machine?

A. Why that was on the No 4 machine, the steam machine sold in 1923.

Q. What year? A. 1923.

Q. What company's machine? A. Keystone.

The Court: What model was it, do you know?

A. No. 4 model.

Mr. Corbett: Have you got a picture of your No. 4 model, Mr.—

Mr. Mahoney: Here is the No. 4 model; the catalogue bulletin number is on the bottom.

Q. Is that the machine you are speaking of (book shown witness)? A. No, sir. it was a later model than that.

Q. This machine you speak of you say was a steam driven machine? A. Steam driven.

Q. Did it have the stops or the links or not? A. No—you mean up here (indicating)—no, they did not have them.

Mr. Corbett: The witness points to the abutments on the sheave links at the top of the ditcher stick.

(Narrative continued.) The machine I spoke of, wherein the pivot pins wore and the latch came open, to all appearances looked similar to this, outside of putting the block of wood up here, to stop breaking the sheave.

Mr. Richey: That is P-17.

Mr. Corbett: The witness refers to P-17.

(Narrative continued.) I could not say whether the attachment came into our hands with the block of wood on the boom—whether it was there or I put it on. I re-

member putting some on. Whether there was one there when the machine came, I cannot say. It was on the machine I am speaking about in 1923 and 1924.

Mr. Corbett: Mr. Richey, I would like to have your model over here.

Mr. Richey: All right. Bring it over.

(Mr. Downie brings model over and places it on the court's desk.)

(Narrative continued.) I operated a Keystone machine such as that shown in Plaintiff's Exhibit P-15. I operated that type in 1921 and 1922. No, I was not able to dig solid rock with that machine. With this machine you could dig with reasonable success sand, and the type of gravel that we saw out there yesterday, and some sorts of hard pan with no boulders in; if it had the boulders in you could never move them with that type.

The Court: That is, with this type here?

Witness: Yes, sir, that type.

The Court: The old Clutter machine.

Q. What type of ground or soil could you dig with this type such as shown in P-17? A. The same ground; possibly a little hard pan with the stone.

Q. You mean almost the same ground as the machine P-15? A. Yes, but a little bit better.

Q. It would dig a little bit better? A. Yes, sir.

Q. First make clear just what you mean by hard pan? A. Well, it is a kind of dirt you find close to hard, solid rock, and is a very hard dirt.

Q. Is it clay or like clay? A. Well, it is as smooth as that; when you go to cut it it is much harder; and sometimes quite often in hard pan you find these little boulders that size (indicating). You cannot move them. You have to put in a stick of dynamite or cut them by hand.

Q. Is hard pan as hard as shale? A. I am not acquainted with shale.

The Court: Ask him if either one or both of these machines will excavate clay.

Q. Will either one of these machines dig clay? A. Oh, yes. Clay is soft.

(Narrative continued.) With the operation of the machine of the Keystone Driller Company, represented by Plaintiff's Exhibit P-15, we had almost the same diffi-

culty with No. 3 as we had with No. 4; outside of the door, this latch would not stay closed; we put a block of wood to hold it there; every time you hit something hard down at the bottom the door would open, when you go to dump it.

Q. And, as I understand you, you had difficulty keeping this latch closed, and you put a block underneath the latch to keep it from sliding down, is that right? A. We had the same trouble when we went to point it with the bars—these bars bend—I have sheared these off a couple of them and have seen other people do it.

Q. How about the matter of dumping this pivoted scoop of Plaintiff's Exhibit No. P-15? What was your experience in dumping? A. Well, if we had clay, the bucket would never stand out as far as this type would.

Q. You mean the dumping operation? A. Yes, sir.

Q. Speaking of dumping on a spoil pile? A. Yes, a spoil pile; that is all we ever do; very seldom in trucks.

Q. Did you ever use this machine for dumping in trucks—referring to Plaintiff's Exhibit No. P-15? A. This machine?

Q. Yes, or attachment. A. We have done it but it has not been very successful, putting it in trucks.

Q. What is the drawback about it? A. At that time we did not use the motor trucks. They were using these horse-drawn trucks. They were so much smaller.

Q. Suppose you describe fully the operation of using the device like P-15 for dumping in wagons or trucks? Just what do you do and what happens? A. You raise the boom up to a certain position. You have a man on the ground. There would not be any cable up here. And let it run out; but they never were much on running out; they much prefer to come into you than to go out.

Q. You say you have a man on the ground; you mean for pulling the latch? A. To dump the bucket.

(Narrative continued.) When you got ready to dump into the wagon you would have to position the scoop right over the wagon. If you are digging a trench running this way, you would have to have the wagon on that angle. In other words, you would have to have the wagon at an angle to the trench, the same angle as the bucket hits it. You would have to have your bucket in the same direction generally as the boom of the attachment. When you trip the latch to dump this bucket you

have a certain amount of jar due to the downward fall of the scoop; but I want to say we seldom dump on trucks; always on a pile; I have had very little experience with that type of dumping in trucks;—this one I have.

Mr. Richey: By "that" he means P-15; and "this" he means P-17.

Q. In order to have the matter clear it is my understanding that in the operation of both this Clutter device of P-15, and the Downie device of P-17, you had one man to operate the lines for controlling the in and out movement and the digging movement of the scoop; he was up on the machine; and you had another man on the ground for tripping the latch for dumping; is that right? A. On a steam machine we had three men; a fireman, a man for dumping the bucket, if he was dumping; if he was not dumping he was on the side of the bank in case we hit a stone, a niggerhead or boulder he would come down and loosen it with the pick; and then there was the operator.

Q. Would you show the court in this Keystone machine what the position of the operator is, the man who is in the cab, what position he assumes, and state briefly what he has to do with the operation of the machine? A. Well, in the early model, No. 3, he had to stand up all day on one leg, the left one; he used both hands this way (indicating); and this foot was for swinging the machine. That was the operation. He had two levers all day long in his hands; he swung it underneath with his foot; and supported himself on the left leg.

Q. Could you let go one of those levers and drop the scoop? A. If you did that you would have to pull your hand all the way back with the brake and it would kick out. There is a dead spot there of 18 inches, on which there is neither brake or traction.

Q. That is, a dead spot on the quadrant over which the levers work? A. You had neither brake nor traction; it was free.

Q. In other words, you had to hold those handles all the time when operating? A. That is, on the No. 3.

Q. Now, how about the operation of the bucket type of device, similar to that shown in Plaintiff's Exhibit P-17; how did that compare with the operation of the Clutter device, such as that shown in P-15? A. Well, both machines operated the same, outside of on this later model the Keystone people had put a seat in there, to sit down on, and if I remember correctly on the boom that gave you a foot brake; so that if you wanted to hold the

boom up this way, you could hold it with that foot brake. But on the bucket line you still had no brake, and if you wanted to release that on the right side, you pulled the rope, the bucket would still kick out.

Q. Then as I understand it, it was the general practice—

Mr. Richey: Now, wait a minute, please. Don't lead him too much. I don't mind a litfle bit, but not too much.

Mr. Corbett: You better wait until you see what I say. You can object then. I think you will agree that what I am asking him he has already said, but I want to make it clear on the record you know.

Q. As I understand, in the operation of this Keystone machine, both the Clutter type of P-15 and the Downie type of P-17, it was customary to have at least two men to operate the machine, one for controlling the line and the other man for either tripping the latch or working around in case you were dumping on the spoil pile; is that correct?

Mr. Richey: Now, wait a minute. You have asked if it is customary. I am willing that he testify as far as he knows of his own knowledge, but as to what someone else done, he didn't see it, and I object to his testifying to what others may or may not have done.

Q. In answering that question, confine your answer to what you actually know. A. Well, some big contractors, that had a few extra men, they would give me three men, that is, including myself would be three; a man, if he wasn't dumping, which we seldom done, he would watch the bank and put cinders in for to get in back of us, and in general a utility man, to keep him busy. If I was working real hard, the fireman would have all he could do to keep the boiler hot.

Q. That is, in the steam machine? A. Yes, sir.

Q. And when you were dumping on the spoil bank, instead of in a wagon or truck, did you customarily open the bottom to dump the load, or did you throw the load out? A. Well, I would say in 90 per cent of the work, the dirt was just thrown out without opening the bucket.

Q. And the dirt came out of the same end of the bucket it went into; is that right? A. Yes.

Q. And when you did not operate that latch, of course, you didn't need a man for operating the latch? A. No.

Q. But when you operated the latch, you did need at least an operator in the cab on the machine, and a man for operating the latch; is that right? A. Well, the conditions would vary. If you had a few trucks to load, I wouldn't ask for an extra man; I would take the fireman. If that was to be a continual performance all day, I would have an extra man.

Q. And if you had a gasoline driven machine, when you didn't have a fireman, would you have to have another man besides yourself to operate the latch? A. Well, we generally have a handy man around to take care of oiling and greasing and loosening up the stones.

Q. I hand you Plaintiff's Exhibit P-18, which is a catalogue of the Keystone Driller Company, and ask you to glance through this catalogue and pick out any pictures which show a man in the machine and a man on the ground or operating the latch in dumping into a truck or wagon. A. Well, you want the skimmer type or the back hoe?

Q. I am referring to the back hoe type of attachment, and please give the pages of any such pictures that you may find.

Mr. Richey: It seems to me the pictures speak for themselves. He hasn't seen the machine being operated.

The Court: That is what I thought. What do you want to show—just what the pictures show in that catalogue?

Mr. Richey: Yes, that is apparently what he is asking for.

Mr. Corbett: Well, one of the points made in this decision in the Cleveland case was that this was a one-man control machine. Now, we want it absolutely clear, what this machine was.

Mr. Richey: It was perfectly clear in that case that we had an extra man to pull the latch. The whole thing was that that one man was operating the power line. That is all we claim.

The Court: That is all you claimed?

Mr. Richey: Yes.

Mr. Corbett: But the decision reads a little different, I believe.

The Court: The decision of Judge Jones, you mean?

Mr. Corbett: Yes.

Mr. Richey: These matters are fairly shown by the machine and appear in the record, and we see no occasion for making them meticulously clear.

Mr. Corbett: No, but we are doing our best to make them meticulously clear, if we can.

Q. I refer you again to Plaintiff's Exhibit P-18, and call your attention to the pictures on pages 28 and 29 of this bulletin, and ask you whether or not there is a man in the cab shown in that picture and a man on the ground for tripping the latch?

Mr. Richey: The same objection.

Mr. Corbett: I want to make this clear to the Court of Appeals, Your Honor.

The Court: Well, of course the picture—does it show it or not?

Mr. Corbett: Yes, it shows it, but we want to make it clear on the record.

The Court: Well, just dictate it to the record, then.

Mr. Richey: Yes, because he don't know what the man is doing.

Mr. Corbett: You will agree, won't you, that it does show a man in the cab?

Mr. Richey: Yes, a man in the cab, and two men on the ground.

Mr. Corbett: It shows one of the men on the ground tripping the latch. Isn't that right?

Mr. Richey: Well, I don't know whether it is or not. No, I think he has tripped the latch; that is my opinion.

Mr. Corbett: You admit it, don't you?

Mr. Richey: No, I will not do that; I don't know.

Mr. Corbett: Well, let the witness testify then.

Mr. Richey: He don't know; he didn't trip it.

Mr. Corbett: He can tell by this.

Mr. Richey: I will agree that the man tripped the latch, yes, if that is what you want me to do.

Mr. Corbett: Do you admit that that is shown on this picture?

Mr. Richey: They often use the man on tripping the latch.

Mr. Corbett: Your briefs, however, were pretty full of one-man control.

Mr. Richey: No, they weren't. One man to control the power line.

The Court: It seems to me that that is what he was there for, to pull that rope.

Mr. Corbett: May I have the answer from the witness?

The Court: Well, yes, I don't see that it can hurt any.

Witness: Yes, sir, two men in that.

Q. And one man is in the cab, and the other man is tripping the latch? A. One man is operating, and one man dumping the bucket.

The Court: That is your interpretation of the picture?

Mr. Richey: What is the other man doing, do you know?

Witness: Nothing; just getting his pay. He got fired.

Q. In this case, there has been quite a lot of discussion about what is called a blind spot in the Keystone back hoe. The substance of it is that when the boom gets to a certain elevation preparatory to dumping, that without the stops or abutments shown upon the sheave links of Plaintiff's Exhibit P-17, that if those abutments are not present, there is a danger that the operator will be unable to position the scoop in proper relation to the wagon or truck to effect accurate dumping.

Mr. Richey: I object to that as leading.

Mr. Corbett: I haven't asked him the question yet.

Mr. Richey: Haven't you got to the question yet? I beg your pardon.

Q. You have operated these shovels both with and without these stops. Have you in operating these shovels without these stops or abutments ever run across that blind spot in the elevated position of the bucket so that you could not get the proper position of the bucket over the wagon or truck?

Mr. Richey: I object to the question as leading.

The Court: I don't think so; I don't think that is leading. Let him answer it. You can cross examine him on that if you wish.

Mr. Richey: Counsel speaks like that, and then it is put in narrative form, and it looks like the witness has said all this.

Mr. Corbett: Well, if this question is going to hurt Mr. Richey, we will mark that in the record.

Q. Do you understand the question? A. Yes, I think I do.

Q. Well, please answer it the best you can. A. It has never made any difference if those blocks was there

or not in the operation of the scoop. It would go in and out just as fast, with or without it.

Q. Will you give your reasons, if any, that you have, why that occurs, so the court can understand what you was doing?

The Court: He said it never did occur.

Witness: It is all in the skill of the operator, how he handles that; if the blocks are there or not, don't make any difference. I have run it with the blocks and without the blocks, and I have never seen any difference in them.

The Court: Your notion is that those blocks are not any good on this machine?

Witness: Well, I never knew them to be any good. I could run them with or without them, just all the same. And I think every other operator could do the same.

Q. I hand you Plaintiff's Exhibit P-19, which is a group of four photographs which were before the court in the Byers suit, and ask you to examine these photographs and state whether or not in your opinion, from your knowledge as an operator, the scoops shown in these photographs are in the usual position for dumping? Please examine each photograph and answer as to each photograph. You will note in these photographs that there is a vertical pole with a representation of feet of elevation, and a horizontal pole with a representation of feet of horizontal distance of the scoop from the boom.

Mr. Corbett: I am correct in understanding those are feet—there is no question about that, is there, Mr. Richey?

Mr. Richey: I don't know.

(Last question read)

A. Where do you get the height of that; is that it right there (indicating)?

Q. These photographs are numbered respectively 15-E, 15-B, 15-C and 16-D, in the order in which they are handed to you. Do I understand you to say that you cannot read the height? A. No, I can't; my eyes are very poor.

Mr. Corbett: Will you agree, Mr. Richey, that the photograph 15-E—

Mr. Richey: Here are some glasses; maybe you can see with them.

Witness: Possibly; I doubt it. (Witness examines exhibit with glasses.) No, sir.

Mr. Richey: What is it you want now? Six feet horizontal and eleven feet vertical, is what I see here.

Mr. Corbett: You mean twelve feet, between twelve and thirteen is the bottom of the scoop, isn't it?

Mr. Richey: Yes, bottom of the scoop.

Q. The bottom of the scoop is between twelve and thirteen feet above the ground level, and the face of the boom is about five feet from the rear end of the scoop. Now, would you say that that was in a proper position? A. I wouldn't say that was in proper working position. It is just a trick photograph.

Mr. Richey: Well, I object to his opinion as to what kind of a photograph it is.

The Court: Yes.

Witness: I have dumped a truck from seven or eight feet possibly away from the machine.

Mr. Richey: Suppose the truck was on a bank or a hill?

Mr. Corbett: Just a moment—you will have a chance to cross examine.

Q. Why do you consider it desirable to have the scoop at a lower position? A. You have a whole lot better control of it, in a lower position of the bucket like that; you have better control of it.

Q. What do you mean by "control"? A. Well, if it is too high above the wagon and you dump it, that load would have to fall that distance, and it wouldn't be far enough away, and it would be apt to do quite a bit of damage.

Q. What do you mean by the matter of it not being far enough away from the boom—that is my understanding of what you said? A. Well, I have seen cases where the bucket—there is no bail on this as far as I can see; the bail was unhooked here—if you have a bail on, she couldn't get in that close.

Q. If you have a bail? A. If the cable was hooked onto the bail, she couldn't get anywhere near that close.

Q. Is it customary in digging with the Keystone device to dig in front of the wagon or at the side of the wagon; I mean in front of the machine, or at the side of the machine?

Mr. Richey: As far as he knows of his own knowledge.

Q. Yes, of your own knowledge, answer the question. A. Why, you always break in front of the machine, and the wagon is on the side.

Q. About where is the wagon ordinarily placed? A. Well, for myself I would place it about five feet outside of the caterpillar, and about six or seven feet ahead of it.

Q. Have you observed other operators placing the wagon; have you observed quite a number of them doing that? A. Yes, sir. If there was no obstruction they would usually place it in about the same position, if there was nothing in the way.

(Narrative continued.) As to whether it would be possible to place the wagon right opposite the tractor so that it would be practically even with the tractor, that is, with the traction member; that is, the front of the wagon being about the front of the traction member, well, that isn't done. It is usually placed out here five or six or seven feet away from the caterpillar, and about four or five out. You couldn't dig in front of the machine and put the truck in front of the machine too, you would either have to dig to the side and put the truck in front, or put the truck to the side and dig in front. I am quite sure that if the bail had been connected, it would have prevented this scoop from going in so closely to the boom. Referring to the scoop shown in the picture designated 15-B which is shown at a vertical elevation of between nine and ten feet from the ground and the rear of the scoop is about ten feet from the boom, I would say that was not the usual position for dumping. It is possibly a little bit lower, and a little bit to the side. I believe this is straight in front now. If you are digging from the center and you would dump off the side, that would be about the height, possibly a foot lower. That would be about the position.

Q. And referring to the photograph 15-C, this photograph shows that the scoop is between nine and ten feet above the ground, and that the rear end of the scoop is about between ten and eleven feet from the face of the boom. Would you say that that was about the usual elevation? A. For dumping the bucket myself, I would have it a little bit lower than this is; possibly a foot or two lower, and off to the side. That is in the center again, I believe.

Q. Going back to the photographs 15-B and 15-C, can you tell from those photographs whether or not the bail is connected in each of these photographs? A. 15-B the bail is not hooked up.

The Court: Well, as a matter of fact, the bail is not connected up in any of these photographs, is it?

Witness: 15-C, it isn't hooked up either.

The Court: Is it, Mr. Richey?

Mr. Richey: I can't tell, Your Honor. Is it, Mr. Downie?

Mr. R. R. Downie: It is disconnected on all of them.

Q. And in photograph 15-D, the bucket or scoop is shown at an elevation from the ground of between thirteen and fourteen feet, and its back end is shown at about eight feet from the face of the boom. Is that a usual position for dumping of the bucket or scoop? A. You refer to this dumping on a truck, not on a pile?

Q. In dumping on a truck or wagon? A. That would be out of position altogether.

Q. There has been something said in this case regarding momentum closure of the bottom of the scoop in the Keystone machine, by which is meant that by a movement of the stick, or possibly the stick and boom, the bottom is flipped shut. You are familiar with that, are you? A. Yes, sure.

Q. Was it your custom to use that? A. Well, when we were using it, very seldom. It was usually a trick of the operator to kick the arm and bucket together and close the door. Sometimes you would miss and try it again, and you would miss, and then you would get mad and dump the bucket down, and it would close itself.

Q. Have you had any experience before you operated the Keystone shovel, experience and knowledge of outstroke shovels? A. Oh, yes.

Q. Did you ever see any such flipping action in the outstroke shovel for closing the door? A. Well, it could be done when the bucket was out straight like that, but the usual operation was to bring the bucket close to the machine and the latch would move for this, and then you would shove it ahead.

Q. Did you ever see it done? A. Well, I have seen it done when there was dirt in the bucket. But you wouldn't close it that way. You would only do it like that when it was swinging it back like this (indicating).

Mr. Richey: He pulled his arm in towards himself, indicating that the bail was pulled in toward the shovel in that way. I simply want the record to show that.

Q. When you pulled the stick of the shovel back toward the boom, did the back of the scoop contact with the boom to effect this closure? A. Oh, no.

Q. Did not? A. No.

Q. The closure was effected, then, by the momentum of the backward movement of the stick; is that right? A. The bucket coming back like that, the latch would be up.

Q. Back towards the boom? A. Yes, and then the latch would slip right in there and lock.

Q. In other words, the backward movement of the shovel towards the boom was sufficient to cause that back to flap shut and be caught by the latch; is that right? A. Yes, sir.

Mr. Richey: Now, that is leading, Your Honor.

The Court: Well, where it is a fair summary of what he testified to, I think it is all right.

(Adjournment to 9:30 A. M., Friday, March 6, 1931.)

(March 6, 1931, 9:30 A. M., Hearing Resumed.)

DIRECT EXAMINATION by Mr. Corbett.

(Narrative continued.) I have used the type of back hoe shown in Plaintiff's Exhibit P-29 which is a photograph of the Osgood machine. Referring to this photograph and judging by the height of the traction members and the shovel in comparison with the height of the bottom of the scoop from the ground, I would say that the scoop in that position of elevation would more than clear any truck or wagon I have ever used. These trucks or wagons usually run from three feet to five and a half feet, possibly six feet. Referring to LeRoy P. Clutter type of Keystone back hoe illustrated by Plaintiff's Exhibit P-15, I have tried to break through solid rock with this machine, while I have taken out rotten rock, I never took out solid rock. I have actually tried to take out solid rock with it, encouraged by taking out a little rotten rock, and would continue on and batter away at that solid rock until something would break, until some part of the machine would break or the contractor would stop me. As to the parts and places where the breakage would occur, on different occasions I have had different parts break for me.

Q. Can you name some of those parts or indicate them on this model P-15?

Mr. Richey: Didn't we go over this yesterday?

The Court: I think so.

Mr. Corbett: I don't think we went over this very clearly, Your Honor.

The Court: Well, what is the use going over the Clutter machine? If you insist on it, go over it, but we are dealing with this later machine anyway, with stronger parts. And the plaintiff here is not claiming that it can quarry with this machine. What I understand they meant, when incidentally they strike hard rock or something, they go through with it. I would like to shorten it up, is all.

Mr. Corbett: I can show you places in the Byers record where the plaintiff said they dug through four or five inches of solid rock.

The Court: Well, they certainly were not trying out this later model machine. Assuming that some parts break in the ordinary use, it is strengthened, of course.

Q. Why is it that you seldom used the dumping action of the LeRoy Clutter pivoted scoop type of the Keystone structure? A. Well, the majority of the times we used the LeRoy Clutter back hoe, we were putting it on the spoil bank, and we would have quite a bit of trouble if we were continually dumping the scoop.

Q. In using the Keystone machine, have you ever had this Keystone machine demonstrated to you, or what is the custom, or what experience have you had in having Keystone excavators demonstrated to you? That is, how long do they do it, or do they do it at all? A. Well, I believe the usual thing is, they send a demonstrator—

The Court: Do you ever buy machines of this kind, or do you just work for somebody that does?

Witness: Working for somebody that did.

The Court: All right, go ahead.

Q. Is the machine demonstrated to you, or to the man who is buying it? A. It is demonstrated to the engineer, and to the contractor.

Q. In other words, the demonstrator shows you how to operate the machine; is that right? A. Shows us about the new features on it.

Q. And were you shown how to operate the Keystone machine that you have testified that you operated? A. The Downie patent I wasn't shown, as I had operated Keystone before, but I was told the new features of it by the demonstrator.

Q. When the demonstrator explained the new features, did he say anything to you about the feature of using that machine for rooting; that is, for permitting the bottom to be unlatched while digging with the side teeth? A. No.

Q. Have you ever attempted this rooting with the Keystone machine, or any other machine? A. Never have.

Q. Have you ever heard of it being done? A. Never have.

Mr. Richey: I object to that.

The Court: It is not very important—whether this witness ever heard about it.

Q. Do you know of any reason why this rooting should not be done with the drop bottom scoop of the type shown in P-17?

The Court: Now, what will the answer to that question mean, in the form you have gotten it—does he know of any reason for it?

Mr. Corbett: I want him to state it as his opinion, and I want him to show his reasons in order for the court to determine whether they are sound.

The Court: Well, if you want to ask what can be done with that machine, ask him that, if that is what you want.

Q. Can this rooting operation be performed in hard ground with this Keystone drop bottom machine of the type shown in P-17? A. Well, I have never seen it done and never heard about it, so I couldn't say.

Q. What was the nature of the soil at the demonstration lot the other day, as to the degree of hardness?

The Court: Well, it was made over soil, Mr. Corbett, probably as loose a kind of soil as you could get. I think everybody concedes that; had old bottles in it and bricks and everything else.

Mr. Corbett: All right.

Q. Will you briefly explain any differences in the matter of outreach of the Osgood machine in depositing upon a spoil bank—any differences between the Osgood machine and the Keystone excavator that you have operated? A. Well, I found that in the Keystone excavator, if you are going to dig in a deep trench, the bank kept caving in; I would have difficulty keeping the dirt far enough away from the edge of the bank, as I could only swing a quarter of the way off center.

The Court: What machine are you talking about now?

Witness: The Keystone.

The Court: Well, which one—the latest model?

Witness: No, these two. I haven't operated the latest model.

Q. Is it possible in the operation of the Keystone excavator that you have operated to throw the stick out over a high spoil bank and maintain it out? A. On the Clutter patent I couldn't. On the Downie patent I was a little more successful, but not all that would be desired.

Q. How about the Osgood device? A. Osgood device would always stay up just as I wanted it to.

Q. Do you know why that is? A. Well, the machine was bigger in proportion, and we had more leverage from the swivel pin to the end of the arm.

Q. Please indicate the swivel pin that you speak of? A. Being this pin right here, where the arm is attached to the boom.

Q. And you had more leverage on what machine? A. From this pin forward to the end of the boom.

Q. On the Keystone, or on the Osgood? A. On the Osgood.

Q. You had more leverage on the Osgood than you had on the Keystone machine? A. Yes, sir.

Q. Was the arm of the Osgood machine, that portion of the arm above the pivot of the Osgood machine, longer or shorter than that same portion of the Keystone machine? A. The arm was longer from the pin to the end of the arm, as I remember, and the A frame where the boom fall cable led back to the engine was much higher.

The Court: Have you finished?

Mr. Corbett: I am just checking up; there may be one or two things more.

The Court: Well, suppose we let Mr. Richey go ahead with his cross examination, and you can ask him later.

Mr. Corbett: All right.

Cross Examination by Mr. Richey.

I am employed at the present time by the Corson Construction Company. The labor unions have a rule in New York that you have to have two men on these machines, but they don't live up to it. It is the rule in a number of cases. On the gas machines of the Keystone, so far as digging in a trench is concerned, dislodging the spoil and scooping it up and getting it out of the trench, you do that with two levers. After you have got the arm swung around to where you want it dumped, you then

control again with the two hands as long as you are dumping by inversion.

Q. Now, all that is done by two power lines, isn't it? A. Well, I have seen three power lines here.

Q. Which three? A. One on the bucket and two on the boom.

Q. Well, these two, of course, are one line bent back. You call them three lines, but in effect this is only one line, just doubled back; that is right, isn't it? A. Yes.

Q. It is quite common to increase the power of the line by doubling it or trebling it or quadrupling it; that is correct, isn't it? A. That is true.

Q. But still you have only two lines controlled by the power? A. Yes, sir.

Q. The thing that trips the latch is, of course, the hand line, isn't it? A. Yes, sir, dump line they call it.

Q. And that is controlled by hand—a man just pulls that with his hand? A. If you are using the latch.

Q. Yes. Now, 90 per cent of the time you don't use that. A. I didn't.

Q. That is right, and when you do use it, you have some fellow around there, some roustabout or somebody of that sort, that pulls the latch when you get it over the wagon? A. That is true.

Q. Approximately how many thousand yards of material have you taken out with this Keystone machine? A. That is a very hard question to answer.

Q. Millions of them, wouldn't you say? A. Well, no, I wouldn't say millions; that is an awful lot of dirt.

Q. A million? A. No, I would say a couple hundred thousand. That is an awful lot, too.

Q. That is the long time you have worked at it? A. Quite a while. You are referring to this type of machine?

Q. Yes, I am referring to the Keystone machine now. Now, the device we used out there at the dumping grounds; of course we used an electric trip, and you didn't have to have a man to pull the trip line, did you? A. As far as I could see, you didn't.

Q. No, that also was done by the operator? A. Yes.

Q. You spoke of mashing in the sides of the ditch yesterday. That is a very inconvenient thing to happen, isn't it? A. Mashing in the side?

Q. Yes. Didn't you say sometimes you get the machine so close to the ditch that it caused the side to cave in? A. Oh, yes, the backfilling operation.

Q. Yes, that is a very inconvenient thing, isn't it? A. That is not a usual thing, but it will happen; something you have to watch out for.

Q. Still you do backfilling with the Keystone machine, don't you, particularly on small ditches? A. I didn't hear you.

Q. I say, you do use the Keystone machine to backfill, don't you? A. Keystone machine to backfill—yes.

Q. And those two photographs I show you here, they illustrate that operation, don't they? A. Yes, they illustrate that operation.

Q. You have used the machine in that manner to backfill, haven't you? A. Not very often, I haven't.

Mr. Richey: I ask that those be marked for identification as Plaintiff's Exhibits P-42 and 43.

Q. Now, when you do mash in, you have to dig it out again, don't you? (No response.)

Q. Could you hear that? A. Yes—you say when I did mash it in I have to dig it out; just what do you mean?

Q. Well, the side of the bank? A. Well, if that fell in when you are backfilling, you just move away.

Q. Well, but ordinarily isn't it true that with the forward arc trouble you sometimes do mash in the sides? A. Not when you are excavating for the trench, because you are on solid ground. You are in back of the trench.

Q. Well, I am talking about the forward arc now; when you have to put it on a mat, you sometimes mash it in? A. The Keystone didn't have that.

Q. I am talking about the forward arc now—any forward arc. A. On a steam shovel?

Q. Yes. A. Would you be backfilling or digging trench?

Q. Digging trench. A. You would run the pontoons over the trench.

Q. Well, but sometimes even then you force them in, don't you? A. Yes, the weight of the machine would force the bank to fall in.

Q. Your work has been done over in New York, hasn't it? A. Most of it.

Q. Where else have you worked with this Keystone machine? A. Bristol, Pennsylvania.

Q. Well, this New York district is very hard rock down there, isn't it? A. Yes.

Q. What is it, do you know; is it granite or sandstone or limestone? A. It is a granite rock.

Q. Granite rock? A. Yes.

Q. Now, that is a good deal harder than shale or slate, isn't it? A. I am not acquainted with either one of the two, so I couldn't say.

Q. But you know that is one of the hardest rocks in the country? A. Possibly.

Q. Manhattan Island is almost one solid rock, isn't it? A. Yes, sir, one hundred feet down about from the surface.

Q. It is the same rock all along the Hudson River on the east side as you go up there on the New York Central, isn't it? A. Not on the east side.

Q. Yes, east side. West side is sandstone, that is where the Palisades are, but the east side— A. Yes, that is right.

Q. Now, these boulders in the hard pan—are the boulders the same kind of rock as the island; that is, is that granite, too? A. No, you wouldn't call it granite, the boulders or hard pan; niggerheads.

Q. But that is a very hard glacial rock, isn't it? A. It is.

Q. How big are they? A. They vary from two inches to five yards.

Q. Where they are small, you can dig them with the ditcher, can't you? A. Well, on two or three inches possibly, you can; six inches sometimes they might stick you.

Q. Well, sometimes when they are quite big you can do it? A. I wouldn't call six inches big.

Q. What is the filler that is in among those rocks? A. It is very hard to dig.

Q. Kind of blue clay? A. No, just a hard dirt, but it is solid.

Q. But you can dig in that as long as the boulders are not too big? A. Yes.

Q. How deep are the strata of the hard pan? A. Well, I have excavated to 22 or 23 feet, and they are still hard pan.

Q. Now, you said you did do some digging in this granite with these ditchers yesterday, but finally the parts broke? A. Yes, sir.

Q. Did you do any execution between the time you started on the granite and the time the parts broke? A. What do you mean, execution?

Q. Well, did you get any rock loose? A. Well, possibly; maybe I might have had a yard out, or half a yard.

Q. So you did do some digging, but the parts were too light? A. If you would call it some digging—I had a hundred yards to dig out, and I could only dig a half yard out.

Q. Well, now, you blast that, don't you? A. That is drilled and blasted.

Q. Do you then get in there with one of these diggers and get out the loose parts? A. Yes, if it blasted small enough.

Q. And sometimes you dislodge that that has just been loosened up, don't you, by digging it loose? A. Not the solid rock.

Q. Now, after you blast it, I mean? A. Oh, yes, then you dig out quite a bit of it; in fact, all of it, if you keep at it long enough.

Q. You spoke yesterday of using this Keystone machine with and without these abutments up here? A. That is true.

Q. Did you ever have occasion to take those abutments off? A. No, I didn't.

Q. Never took any of them off? A. No.

Q. Kept right on, left them on there; for year after year you left the abutments on? A. I wouldn't say year after year, because, two years I run one of that type and later on we had one with the blocks, and I could never see any difference in either one.

Q. But you never took them off? A. No, never did.

Q. You never took one of them off and put the sheave on, did you? A. When you say "took them off," did you mean to chop these blocks off, or just to spread the rod to put the sheave in?

Q. Well, did you ever remove the abutments at all? A. Yes, both of them can be removed.

Q. And then you put them back on again? A. Yes.

Q. Sometimes you do digging off the center line of the machine, don't you? A. On very rare occasions.

Q. Well, now, I show you a photograph here; there the wagon is shown in the center line of the machine, isn't it? A. That is true.

Q. And the machine has been digging to the side? A. It so indicates.

Q. Of course, it is possible to dig that way with this Keystone machine, isn't it? A. Yes, it is.

Q. Just the same as digging in the center line and dumping on the side, except of course as to the position? A. If you were doing that type of work. I never did that type of work.

Mr. Richey: This may be marked for identification Plaintiff's Exhibit No. 44.

Q. Now, in this forward arc machine, that is, the steam shovel type, it is the back of the boom that is pivoted, isn't it? A. The upper back of the bucket, not the lower.

Q. Not the bottom? A. No.

Q. Now, the way of closing that, as you described it yesterday, is that you swing the scoop back towards the machine, don't you? A. To working position.

Q. To working position; and as it passes the bottom of the arc and comes up, the back is closed by gravity; that is right, isn't it? A. Closes itself.

Q. Yes, by gravity? A. Yes.

Q. Did you say you never had done any undercutting with this Keystone machine? A. If you will explain what you mean by undercutting, I might possibly answer.

Q. Well, did you see that demonstration out there the other day when Mr. Elmire cut under on one side of the trench; that is, he made the trench wider at the bottom than at the top; did you see that? A. I noticed the trench was wider at the bottom, but I don't think it was from undercutting.

Q. Well, did you see him doing that? A. No, I don't believe I did.

Q. You didn't see that? A. I was looking; he might have done it, but I didn't see it.

Q. Well, now, if you are laying a pipe line, and you encounter a telephone pole down in the direction of your pipe line, you can either dig your line straight under the pole or bend it around the pole, can't you? A. You can't run a pipe around the pole. It must be right in line.

Q. Must keep in line? A. Exactly.

Q. You either have to move the pole, or put your ditch under it, don't you? A. Exactly.

Q. Now, do you consider it would be an advantage if the machine could dig a trench around the pole and then get under the pole so the pipe line could get under the pole? A. Well, how deep would this pipe be?

Q. Well, any reasonable depth? A. Well, reasonable depth—let's say 15 feet?

Q. Yes. A. No, you couldn't.

Q. Couldn't do that? A. No.

Q. You never tried it? A. I have tried it; I know it can't be done.

Q. Do you say that Mr. Elmire never saw you do that? A. Yes. That would be to a depth of 15 feet.

Q. Well, all right; now let us say 10 feet. Did you ever undercut a pole 10 feet? A.. Undercut a pole at 10 feet?

Q. Yes, or anything of that kind? A. Not that I can remember.

Q. You don't remember? A. I don't.

Q. You do know Mr. Elmire, don't you? A. From the spare part department in New Jersey.

Q. He has been over there and seen you work on this machine, hasn't he? A. He told me he has.

Q. You don't remember seeing him around there? A. I know men of the Keystone Company have watched me, but I don't know who they are; I wasn't interested.

Q. And you wouldn't say that he didn't watch you? A. No, I wouldn't.

Q. And you cannot say that Mr. Downie has not watched you? A. No, I wouldn't, because I don't know.

Q. Now, what is this rotten rock you worked in down there? Is that this granite that has been aged by weather? A. Well, there might be a little seam, or something that has been mixed in, that you could break away.

Q. You don't know how hard that is in comparison with shale? A. No, I don't know anything about what shale is.

Q. Well, sandstone? A. We would always consider that rotten rock, too.

Q. This rotten rock is about like sandstone? A. Right close to it; different in appearance but—

Q. Now, in straight digging in soil with this Keystone machine, you are able to operate that with accuracy both in the digging and in the unloading, aren't you? You are good enough to do that, aren't you? A. I was, yes.

Q. Now, your written testimony shows this—I don't know whether this is what you said or not, or what you intended to say. You said, we had almost the same difficulty with No. 3 as we had with No. 4. Outside of the door, this latch wouldn't stay closed. We put a block of wood to hold it there; every time you hit something hard down at the bottom the door would open. Now, do you mean to say that every time you hit something hard, the door would open? A. No.

Q. You didn't mean to say every time? A. Wherever the pins were worn.

Q. That is when the pins were worn? A. Yes.

Q. After you had been digging in the granite and wore the pins, why then the bottom would fly open? A. Yes.

Q. But normally that wouldn't do that? A. According to the conditions you were digging; if it was blasted rock, it might open once a week; if sand, maybe once in two or three or six months.

Q. Just where did you place that block of wood that you were speaking about? A. Just about there (indicating).

Q. Looking at Fig. 2 of this Clutter drawing, you mean to say you put it right in there between the spring 13 and the ditcher stick; that is right, isn't it? A. There is a block placed the whole length of the slot to keep that catch from jumping out of the lock.

Q. That would be at point 16-A, slot 16-A? A. Yes.

Q. And during what operation was it that you put that block in there? A. Whenever the digging was real hard.

Q. When you would try to dig in the granite? A. No, not necessarily in hard pan, but we hit a boulder in it, and there would be a sudden strain, she would kick out.

Q. That is, you would hit one of these boulders, and she would kick out? A. Yes. And as a usual thing in hard pan you had boulders.

Q. But in ordinary work, you didn't need it? A. Ordinary work—we kept it in all the time.

Q. Just as a matter of precaution? A. Well, to keep you away from trouble.

Q. But when you were digging and dumping in wagons in ordinary work, you didn't need that? A. We done very little, that I can remember of, dumping into wagons with that type.

Q. With the Clutter? A. With the Clutter.

Q. And of course when you were dumping on the spoil bank, you didn't need that slot, and you just left the wood in there? A. Well, the wood was on, yes, the time that I run we kept the block in there so we wouldn't have that delay.

Q. Of course, in your digging you might strike one of these boulders, and if you were not going to dump any way on wagons you wouldn't need the slot, so you just left the block in there; that is right, isn't it? A. I found

the machine and the scoop operated better and with less delay, by keeping that block in there at all times.

Q. You said you used the Osgood machine like shown in one of the Exhibits handed to you here? A. Yes.

Q. How long have you used that? A. Between five and six years.

Q. You have been working with it lately, have you? A. With the crane boom lately.

Mr. Richey: That is all, Your Honor.

Mr. Corbett: That is all, Your Honor.

Pearl Davis, a witness called by defendants, being first duly sworn, testified as follows:

Direct Examination by Mr. Corbett.

My name is Pearl Davis. I am forty years old. I live at Columbus, Ohio. I am engaged in the excavating business for myself. I am a contractor. We do road work, sewer work, cellar—any kind of earth movement. I have had experience in trench digging. I have been a contractor for fifteen years. I have used Keystone back hoe machines. I have used machines of the types shown in models Plaintiff's Exhibits P-15 and P-17.

The Court: How long have you been in the business?

Witness: Fifteen years as a contractor. Of course, I have followed it ever since I was twelve years old; that is, in this kind of work.

(Narrative continued.) I only attempted to use the Keystone machine for undercutting once. And on this occasion, we bent the boom. The boom was bent so badly, that we had to buy another boom.

The Court: What model was that?

Witness: That was a Model 4.

The Court: How long ago?

Witness: In 1921, the machine was bought in 1919.

(Narrative continued.) This happened on the machine of the Model 4—it come out in 1919 with that bucket like is on that furthest model over there (indicating Plaintiff's Exhibit P-15). We operated the machine of the type shown in Plaintiff's Exhibit P-15 from 1919 to 1922. We used it for loading into wagons, but we had a lot of trouble with the bucket in dropping it, and dumping it and hitting the side of the wagon, and tearing the side of the wagon.

The Court: Well, that is the Clutter machine?

Witness: That is the Clutter machine.

The Court: Exhibit P-15?

Witness: Yes, sir. At that time we didn't have the trucks to dump in. Your wagon bed is only three foot and two inches wide, and it is bad to dump in. If you got it up high enough to miss the bed, so the bottom wouldn't hit the bed, then you missed some on this side of the line, or on the other side.

The Court: Ever try to put it in the wagon lengthwise?

Witness: You couldn't get your wagon around to put it in lengthwise, because if you have to put it around there, you have no control over the bucket, or to a certain extent; you have some control, but if you got your bucket out there, and you have a man with his back to you, you are liable to knock him in the head.

The Court: Wouldn't do very much good, would it?

Witness: No, sir.

(Narrative continued.) I have operated this Keystone machine in sand and gravel and in just ordinary loam. I have tried to dig rock with both of these machines, near Columbus in Franklin County. We didn't have so very much success in solid rock, you couldn't dig it; it is out of the question to dig. The only rock you can operate the machine successfully in is in heavy boulders; what I mean, around Columbus there, they have a lot of gravel, it runs anywhere from an inch to four inches in diameter. You could operate in that, but if it got bigger, you couldn't operate in it. We had four machines of the back hoe type. Two of each type. When we bought these machines, the second, third and fourth were demonstrated to us. Each machine was demonstrated for five days. Now, wait a minute, I am wrong. The first and second machines we had demonstrations on, or the second and third, we had demonstrations on, and on the fourth one, they just shipped it in and we done our own demonstrating. On the second and third machines, we had a man demonstrating it five days. The second was a Clutter type machine, the same as is shown in Plaintiff's Exhibit P-15. The third was of a Downie type, such as shown in Plaintiff's Exhibit P-17, except that the third machine we got didn't have the stops on. During the five days' demonstration on each of these machines, nothing was ever said by the demonstrator about operating this shovel for rooting, that is, permitting the bottom to become un-

latched, and digging first with the side teeth, and then closing the bottom and completing the digging. Neither was undercutting explained to us at any time by these demonstrators. I have operated a Keystone machine of the type shown in Plaintiff's Exhibit P-17 without stops and I have operated this type of machine with stops. I could not see any difference in the operation between the device with the stops and the device without the stops. I never had any trouble in loading into wagons with the device without stops due to any blind spot, nor the hanging up of the boom on the stick in the elevated position of the boom.

The Court: Did you ever strike a blind spot?

Witness: I never heard tell about the blind spot until I heard them talking in this court about it.

(Narrative continued.) I operated this machine without stops for about two years. In all that time I never heard tell about the blind spot. I never had any trouble getting the scoop down into position for dumping onto a wagon, but we did have some trouble—we had a sewer and we was putting in a 36 inch pipe, and we was cutting kind of a blue gumbo out, and it was muddy and wet down in there, and when we got that bucket full of that gumbo you couldn't dump it on account it would get out between the teeth and the bail, and you would have to get it over to the wagon or truck, and you would have to jerk it there, and of course you haven't got much control over it when you jerk it up and down. I found the drop bottom scoop satisfactory in dry dirt or gravel. We use the drop bottom scoop all the time, that is, we dump out of the drop bottom scoop practically all the time. In the work that we have, we dump very little on the spoil bank, we dump into wagons.

I have heard the discussion here about undercutting, and about undercutting under a stone, tree or pole. The demonstrators we had never explained that feature of the Keystone back hoe to us. I have tried to do that and I explained what success we had before. In the operation of the latch to trip the bucket on these machines it was customary to use a man on the ground to pull the latch.

The Court: Lot of stone and slate north of Columbus, isn't there?

Witness: Yes, sir.

The Court: Couldn't use this shovel or any of these shovels in there?

Witness: No.

(Narrative continued.) I never attempted to dig concrete with this shovel, this back hoe. I have attempted to strike a hammer blow with the machine, by manipulating the boom and fall line. In striking this blow you would not let go of the hoisting line entirely, you would throw the bucket out as far as you could so it would drop, straight up and down, on the teeth, and just before it struck, you had to catch some of the weight of the boom, because if you didn't the bottom of the support knuckled in, and it would break those pins off there. I am speaking more about that Clutter type over there. If you let go of the line entirely, the hoisting line, and attempted to extend the scoop out with its points down to perform a picking action with it, it would break the joint through, that is, this thing here. And the first one we had had this rigging on it.

Mr. Corbett: Referring to upstanding support for sheaves.

(Narrative continued.) And the next one we had had those taken off, and this sheave set back here, and no support back here at all, but the same kind of bucket. And that up there, this going up there with this knocked off, because this has a chance to drop down in between the two parts there.

Mr. Corbett: Speaking about the sheaves dropping down in between the boom.

(Continuing) And it goes over the center, that is what I mean.

Q. This bucket would go up higher than the line of your boom? A. Yes, sir, drop down in there, and it breaks these pins off here, shears those off here.

The Court: That is in the old Clutter machine?

Witness: Yes, sir.

The Court: Did it do it on the next model?

Witness: No, it didn't do it so bad in this model as it did on that one. This model here, you can get it out—it all depends on the size of the bucket you have, and how far out you can get your bucket. Take a small bucket, and it will extend it further this way than it will with a large bucket. You take a large bucket, and the weight of it holds it in there.

(Narrative continued.) We didn't have much experience with throwing out on the spoil bank with it. We had some experience with picking or hammering with the drop bottom bucket. We found in digging or anything, if you had a very large bucket, you bent those pins, that hit in here, that is, the pivot pins of the drop bottom. Then you had trouble with your buckets staying latched. That is, in any hard pan or boulders or gravel like you have around Columbus. I couldn't say definitely how often we had to renew the pivot pins in this drop bottom, but I would say in real hard stuff, digging in hard stuff, you might have to change the pins maybe once a day and maybe twice a day, and then maybe you wouldn't change them for a month.

The Court: You carried those pins with you right along?

Witness: Yes, carried them right along, because the agent there told us that is where he had the trouble; he kept the pins in stock for that.

(Narrative continued.) These pins cost about a dollar and a quarter apiece. I have operated an outstroke shovel, that is, a regular steam or gas shovel, in which the shovel operates outwardly from the machine. I would say that my actual operation of that type of a shovel would amount in all to about a year's time. The bucket in that type of machine you close by manipulating the stick, either up or down. You can close it in two ways. You can pull her up and drop her down—I am talking about the outstroke machine now. You pull your stick and bucket up pretty fast, that is, get a momentum on it, and stop.

The Court: Crack the whip.

Witness: Yes, and then you can drop it down and stop it real quickly, and put it up there. From there you can manipulate it either way, up or down, and latch the bucket.

Q. How does your repair bill run on these machines?

Mr. Richey: Oh, I think that is immaterial. We do not claim the machines don't wear out.

Mr. Corbett: Well, it shows, Your Honor, what the capability of the machine is.

The Court: Oh, let him answer it. What do your repair bills run? It depends on the kind of job, I suppose?

Witness: Yes, it depends on the kind of work and the job. The first job we did was very tough digging, right out there in the vicinity where you was talking about, and we worked 100 days out there, and our repair bills was $1200; that is, $12 a day.

The Court: You charge that up to the job, I suppose?

Witness: Yes, that is charged to the job. That was on the second machine that we had.

Mr. Corbett: That is all.

Cross Examination by Mr. Richey.

This job I just spoke about, this $12 a day job for repairs, we were working in—part of was just loam, part of it was gravel, that is, gravel from the size of an inch on up anywhere from four to six inches in size, and then part of it was solid stone. The machine we were using was the Model 4 machine, steam wheel, and had the Clutter bucket on it. The machine at that time was two months old, a new machine. This had a Clutter bucket on the No. 4 machine, that is the bucket that came out with it—it didn't have this bucket when we bought that in 1919. I don't remember what the names of the demonstrators of our machines were. They did not come out of the Columbus office, they came directly from the factory. I couldn't just name the time these fellows demonstrated the machine; the first one that we bought from the Keystone Driller Company was in 1919, in the winter. The second machine was demonstrated in the summer of —I wouldn't say whether it was '22 or '23; it was between '22 and '23 in the summer time. I don't know the name of the man who made the demonstration. There was no third demonstration. The first machine that was demonstrated was the Clutter machine No. 4, with the Clutter bucket. The second machine was the No. 4 with the drop bottom scoop. I tried this undercutting once and bent my boom. We were just trying to undercut kind of a hard pan. That boom I would say was, somewhere between nine months and a year old. I was the man who was trying to do the undercutting. I had no experience in undercutting before that.

The Court: Would you say that is a rather difficult operation? You have to learn to do it, don't you?

Witness: Well, I can't see where it is to any advantage, for any undercutting of anything, because you

couldn't undercut to lay a pipe or anything; it has got to be done by hand, and when we have always done any of that work, we just go up to it and then dig around it, and put laborers in there.

The Court: What I am trying to get at, undercutting is rather an expert thing; a fellow would not be able to do it until after a good deal of experience, would he?

Witness: Well, anybody that could operate a Keystone could drop his bucket in to get where he was cutting and leave his line loose—that is, his boom line, and swing it over as far as he could, to pull the top of his boom over. The idea of undercutting is to pull the top of the boom over and throw your bucket into the bank where you want to cut.

The Court: Well, it seems to me it is a rather difficult operation; I don't know.

Witness: Well, it is in a way. It isn't practical; that is the idea about it. It is not practical to do that.

(Narrative continued.) Sometimes only part of a pipe will go under a tree. Under those circumstances it is of some advantage to undercut. You can undercut in soft dirt, where the soil is soft, where you are not going over say five or six feet deep, why you can undercut more then than by going down deeper; but in undercutting, you know a sewer or anything, you have to carry a man along to keep your grade and keep it level so the pipe will be laid anyhow. You have got to have a man like that along, because you couldn't just dig it with a machine and lay the pipe in, because they have to be inspected and put in right to the grade and all that, and so you have to have a man along.

Q. Now, in this demonstration of the machine with the Clutter bucket on it, did that man demonstrate to you how to dump in a wagon? A. Yes.

Q. Was he successful in dumping in the wagon? A. Not any more than I was, or any other operator that I had after that.

Q. And your contention is that as far as the dumping feature of the Clutter is concerned, it was no good because you couldn't dump in a wagon anyway? A. You couldn't get it stopped just right to dump into a wagon.

Q. Did you use it to dump in a wagon? A. Yes.

Q. Notwithstanding that fault? A. Well, we had to use it for dumping into a wagon.

Q. And you did dump in the wagon with it? A. Yes, but it wasn't satisfactory.

Q. It wasn't perfect, you mean? A. No, it wasn't perfect.

Q. You could spot your load, but you couldn't dump it accurately? A. You couldn't dump it accurately.

Q. And that is because when you twist the latch, why the bucket kicks— A. Yes.

Q. Out of the position in which you placed it? A. Yes.

Q. And you couldn't always judge the amount of the kick? A. No, you couldn't do that exactly.

Q. But still you continued to use it—for how long did you continue to use it for dumping in wagons? A. Well, we used it for, I would say—well, off and on, for two years.

Q. Well, now, of course Columbus is a level country, isn't it? A. Well, yes, usually.

Q. And most of your dumping in wagons is when the wagons are on about the same level with the machine; isn't that right? A. Yes.

Q. You don't often have wagons on a hillside or anything of that kind? A. No.

Q. You sometimes dump into trucks, don't you? A. Yes.

Q. And how high are they? A. Well, a truck is—there is different sizes in trucks, but they have got them very near standardized now, and they clear the bed—it clears about, well I would say from five foot and a half to six foot and a half.

Q. You said you never heard of this blind spot. You don't want to be understood as denying that there is such a thing in the operation of this machine, do you? A. Well, I mean that I never found a blind spot in it, and never heard anybody say anything about blind spot until I come here.

Q. But you don't deny that there is such a thing in the machine? A. I have never found it.

Q. That isn't my question. You don't want to be understood as saying that there is no such a thing?

The Court: Well, his position is that he never saw it.

Mr. Richey: All right, I will withdraw the question. That is all.

Mr. Corbett: That is all.

GEORGE E. TURNER, a witness called by defendants, being first duly sworn, testified as follows:

DIRECT EXAMINATION by Mr. Corbett.

My name is George E. Turner. I live at New Lexington, Ohio. I am sixty-three years old. I am an engineer and a manager.

Q. Will you state your education and experience along mechanical lines, particularly with relationship to such experience and education that might qualify you to testify in this suit relating to back hoe attachments. A. I left High School when I was 16 years of age, and for a short term of two or three months was employed with the Norris & Christian Lime Stone Company, producers of lime, and my first duty was to run a hoisting engine which drew the cars from the pit up to the top of the kilns. About that time the Marion Steam Shovel Company was just organized and ready to commence operation, and I was called there and took the same kind of employment for a short time, in operating the old steam plant. This plant had been an old planing mill, and was taken temporarily to start this works, and the same old steam plant was retained to furnish the power for such tools as they had set into this old building in the way of machine shop tools. The old planing mill equipment had been removed. This was a part of the present ground where that plant is located. About six months I operated this old steam plant; this was starting in in 1884. And then I signed up an apprenticeship contract, existing in those days, which later went out, and that was for three years in the works, and that entitled one the privilege to a boy, under that kind of a contract, to use all of the devices and tools that they would have when they started or might secure during any time of that term, and to work on any or all parts of the shovels which they were building. That carried with it also some work in the foundry; in those days apprentices had to shift about on certain days, and some experience in the pattern department, working on patterns. And at the close of the period, after something like three years and six months, about 1888, with other, I organized the Electric Light & Power Company, and constructed that plant.

The Court: At what place—Marion?

The Witness: Marion, Ohio, Marion County.

During the latter portion of that period, which extended for eight years, from 1888 to about 1896, with

some of the same people I organized the Marion Street Railway Company, built that plant and continued with it for two years, as manager of both of those companies. At the close of that period, about 1896, I went with the Engineering Company at Bucyrus, Ohio, there designing one or two boilers in steam plants. About 1900 I was called back to the Marion Steam Shovel Company plant at Marion, Ohio, for a period which was supposed to be rather temporary, or only for one year, but which resulted in a span of four years. At that time this plant was restricted to a somewhat smaller area than it is now, although they owned the land and held it in reserve on which to make enlargements. I was asked to take charge of that work, in laying out the plant construction and handling the enlargements, and it was thought that that might only last a year, but it resulted in the continuation there, a continual building program and enlargement of the work for about four years. That meant, of course, the laying out of the different plants, different drawings and plans, with tracks, and how the work might be routed, and so forth, and so it took considerable time, and finally resulted in a great portion of what is now that company's works. That is, especially in the neighborhood there of the Union Station.

The Court: Right along the tracks?

The Witness: Right along the tracks as you go through town, the first portion, and they had previously to that, right across from the Union Station.

Q. What did you do after that; what was your next period? A. After that, I then went, at the close of this period, about 1904, with the Bellefontaine Foundry & Machine Company at Bellefontaine, Ohio. That was a company that done foundry work, and there I built ditcher dredges. These ditcher dredges were used in the land drainage work in the central western states during the period when there was a great deal of that work done. At the close of that period, and up to about 1914, some four years, I was engaged with three different construction companies in the West, in the construction and use of dredges to dry land, and the actual drawing of those contracts in the land drainage districts at different places.

At the close of that period, 1914, I went to the United Iron Works Company, with offices at that time in Springfield, Missouri, and later in Kansas City, Missouri. At

the close of that period, about 1920, I came to my present position and took charge—with the Kehota Mining Company at Pittsburgh—and took charge of the Three Strip Coal Mining properties in that county. The same people had another works similar to that over in Eastern Ohio, and insofar as the engineering and mechanical work is concerned, I had charge of the equipment there, too. These plants were equipped with seven or eight extremely large stripping shovels, and a similar number of smaller shovels that were used to raise the coal and dump it into cars after delivery from the tipple, after the top soil and rock and dirt had been removed.

The reason I was called there was that these shovels had developed considerable weaknesses—very large—and these were not minor parts, but heavy, extremely large parts, and my work for some time was simply to take these up and develop new or stronger parts, after working in preparation of the manufacture at Marion, Ohio, and endeavoring to get those parts replaced. Of course, whatever happened to one of these machines would happen very soon with all the others if kept in operation, and the plant program was to head that off, in a measure, and get these parts in rapidly enough to save a shutdown when these larger breakdowns occurred. The difference in strip mining and underground mining is that when that sort of thing happens the operation stops, and your mine stops; they have no output and nothing to market, and go off the map so far as that is concerned. So it was necessary to head that off. My work during this period, the first four or five years, was in that kind of work, and during that time I devised some forty or fifty parts. Some of those have been patented and disposed of, some were not; and this resulted later in bringing out a new model of that machine, somewhat larger and stronger, involving a great many of these improvements, so that in the future you wouldn't have that same trouble. The old models, of course, were continued to be used, reconstructed and rebuilt, and parts secured for them.

Q. What knowledge have you of patents, if any, Mr. Turner? A. During my association with these different companies I have at times applied for patents, and secured them, especially during my term with the United Iron Works, where I was in charge of the sales and engineering of both ditching machines and foundry equipment; they brought into my department the patent appli-

cations of which they wished to make a study. This company manufactured a great many different things, and were constantly looking into new machines of various types, and these things I would go over, and also make estimates of the possibilities of the machine, compare them with other machines, make estimates to see whether they might be manufactured with any profit, determining whether there was a market, and that class of work.

Q. Have you read the patent of LeRoy Clutter, No. 1,317,431? A. I have.

Q. And do you understand it? A. Yes.

Q. I direct your attention to claim 4 in this Clutter patent, and ask you to briefly point out the elements of the Clutter device which are literally described by this claim.

Mr. Richey: Has he seen the Clutter device operated?

Mr. Corbett: Are you asking him, or asking me?

Mr. Richey: Well, I thought I would ask you.

Mr. Corbett: You ask him.

Mr. Richey:

Q. Have you seen any of these Clutter machines operate, Mr. Turner? A. I have seen Keystone machines operate; I don't know whether it is a Clutter or not, in the days I was looking at them.

Q. You don't know which type machine it was? A. No, I wouldn't say, I have seen a good many of them, and I just know it was a Keystone machine.

Mr. Richey: Well, now, you brought this question up yesterday on qualification.

Mr. Corbett: No, you brought it up on cross.

Mr. Richey: If Your Honor please, this brings up quite a question, and as I said before, it has been the common practice in these patent cases to have a man testify about the operation of a machine from these drawings, although he has never seen the machine operate. Now that has come about, I think, in this way: They used to file models in the Patent Office, but the men down there got so they could tell the operation of a machine from the drawing better than they could from the model, and so they actually discontinued the filing of the model. And in the Byers case you will find in the record that men testified about these machines and their operations without ever having seen the machines.

Now, I don't want to impose upon any situation by objecting to a man testifying about a machine because

he has not seen it operate, but if that is going to be the ruling, I think it ought to work both ways.

Mr. Corbett: Your witness testified here yesterday when he had not seen it operate, didn't he?

Mr. Richey: Yes.

Mr. Corbett: What is the point you are trying to make then?

Mr. Richey: I am trying to make this point: That you objected yourself to Mr. Sessions testifying when I asked a similar question of him, because he had not seen the machine. You know, as well as I know, that in these patent cases, ever since we have been practicing, experts have testified to machines, how they operate, that never saw them before. And you know that has been done in this court; you know that is true and Mr. Reed knows that is true. Now, we had to get around and set up a hypothetical question to get that evidence in. If that is going to be the rule, let's go through with it, but I am telling the court what the practice is.

Mr. Corbett: Is that all an objection to this witness answering this question?

Mr. Richey: My objection now is that we must follow the rule both ways, or not at all. And here is a man that comes forward to testify to the Keystone machine. He don't know whether he saw one or not.

Mr. Corbett: Did you say, Mr. Turner, whether you ever saw one of these machines?

The Witness: I don't know what the names were of the patents.

Mr. Corbett: Well, you have seen Keystone machines since, haven't you?

The Witness: A lot of them, yes.

Mr. Corbett: What types of machine were they?

The Witness: These various types.

Mr. Richey: Did you ever see a Clutter machine?

The Witness: I have seen a great many of them; I saw them in the early days; I didn't know it was a Clutter or what it was.

Mr. Richey: Of course, if he has seen a Clutter machine operate, that is all right.

The Witness: I don't know whether it was Clutter or what it was.

Mr. Corbett: I think we would get along much faster if Mr. Richey reserves his questions until the regular cross examination time.

The Court: Well, suppose you ask him about that.

Mr. Corbett:

Q. Just state what experience you have had in seeing this Keystone operate, if you have seen the Keystone machine operate? A. Yes, I have, a number of times, on a good many occasions.

Q. Where? A. Well, I used to travel around a great deal in this work where I saw machines and watched them, and I have seen the skimmer machines and Keystone type—it might be Keystone in the early days when I first saw them. Of course, I would stop and watch them work, that is the reason I would see them.

Q. As a matter of fact, haven't you in the past several weeks? A. Yes, in the past three or four weeks I have seen a number of them.

Q. And you observed them carefully? A. Yes, sir.

Mr. Richey: Have you seen a machine like that of the Clutter patent? That is what you were asking him.

Mr. Corbett: No, I didn't ask him to check the claims of the Clutter patent.

Mr. Richey: I object to that for another reason. In the first place that is the function of the court.

Mr. Corbett: I didn't ask him to interpret the claim, but just point out the elements of the claim.

Mr. Richey: That is the function of the court.

The Court: Well, Mr. Corbett, if I haven't gotten that much out of this case up to this time, I have been wasting my time. It tells what it is here.

Mr. Richey: The interpretation of the claim and the application of the claim is the function of the court, just like the interpretation of a contract. Of course, the application of the claim is the interpretation of the language of that claim in connection with that device. Now, there is no better established rule in the patent practice in the courts than that the interpretation of the claim and the application of the claim is the function of the court.

The Court: It would have to be.

Mr. Richey: The function of an expert is to explain to the court what the machine is and how it operates and what it does in his opinion, and anyway, as I said a while ago, that is whether he has seen the machine operate or not. That goes to the weight of the evidence.

The Court: Well, that is what I ruled yesterday, or day before.

Mr. Richey: Well, if that is the understanding, all right. That is the practice, Your Honor, as I under-

stand it and as I have experienced it, and that is what I am willing to abide by. With all due deference to Your Honor, I didn't think the ruling yesterday was correct. But we got around it by asking a hypothetical question. But we are going to save ourselves a lot of time probably if we go ahead and let these experts go ahead and explain them, but not interpret the claims.

Mr. Corbett: All I want to do is to have this witness point out the elements or features of this device which respond to this claim literally interpreted.

The Court: All right, go ahead.

Mr. Richey: Will Your Honor please grant me an exception to the witness reading the claim of the drawing or undertaking to interpret it?

The Court: Certainly.

Mr. Corbett: Your Honor, I want to say that we have got a few charts here for the purpose of facilitating your labor; one of the most difficult things in patent work is to read these patents laboriously. Now, we have here some colored charts, simply to assist the court in that respect, that is all.

The Court: All right.

Mr. Richey: This man doesn't know the rules of equivalency or the rules of interpretation of a claim in connection with the specification, purely legal points, which incapacitates him from applying any claims to the drawing, or explaining what they mean.

Mr. Corbett: You seem to be rather fearful of this.

Mr. Richey: Well, I am fearful of a man that don't know anything about the patent law, to tell the court what the patent law is.

The Court: Well, now, what is your question?

Mr. Corbett:

Q. Please read the claim 4 of this Clutter patent and apply the literal language of it to the elements of the structure of the LeRoy Clutter patent 1,317,431.

The Court: Well, I agree with Mr. Richey about that, but go ahead. I don't see why I can't do that, and save a lot of time.

Q. Just briefly enumerate the elements. A. In this patent No. 1,317,431, LeRoy P. Clutter, there is disclosed a boom marked 15, pivoted to the bottom, to raise and lower, but it doesn't appear here—

Q. Well, just take the claim of the Clutter patent and read each element and point it out in this structure, is all.

The Court: Well, that is first a pivoted boom; you have pointed that out.

The Witness: Yes.

The Court: A scoop carrying member pivotally connected therewith.

The Witness: In orange here.

The Court; A pulling member for elevating and lowering the said boom.

The Witness: In black.

The Court: And a pivotal means carried by the boom connecting the pulling member therewith.

The Witness: That is this construction here.

The Court: And said scoop-carrying member, a scoop connected with the scoop-carrying member and projecting toward the boom.

The Witness: In blue here, marked 3.

The Court: And a pulling member connected with said scoop.

The Witness: 23 here.

Q. Have you read, and are you familiar with, the patents listed in defendant's answer in connection with this Clutter patent No. 1,317,431? A. I have.

Q. Will you point out to the court the structure and operation of some of the prior patents on back hoe devices which are listed in that answer?

Mr. Richey: I am not objecting to his describing the operation of this machine he has not seen, on the theory that our experts can do the same thing, Your Honor.

The Court: All right.

Mr. Mahoney: At this time, Your Honor, I want to offer in evidence Defendants' Exhibit 62.

The Court: That is, the patents pleaded in the answer?

Mr. Mahoney: Yes, sir.

The Witness: Now, the first one here, E. O. Rood, ditching dredge and excavating machine, patented July 17, 1888, disclosed a boom marked 6 in red, pivoted in its lower end to raise and lower, a stick, orange in color, marked 13, pivoted at the outer end of the boom at a point between its ends and scoop, blue, B, attached to the stick in a rigid manner, pulling member 22 attached to the scoop, and the hoisting member 16 attached to the stick, and lower end to sheave 17 in the upper end of the boom.

The Court: Now, was this patent in the Byers litigation in Cleveland?

Mr. Richey: Yes, sir.

The Court: This patent was?

Mr. Richey: This Rood patent?

The Court: Yes.

Mr. Richey: Yes, that was there, and evidence regarding the machine.

The Court: Every time you get to one of those patents, I would like to know whether it was in the Cleveland suit.

Mr. Richey: Yes, this is one of the patents the Court of Appeals referred to.

The Witness: The second one, Your Honor, A. B. Weber, steam shovel excavator, patented October 30, 1894. Here the boom in red, a handle, or stick sometimes called, in orange, pivoted between its ends, bucket in blue, rigidly attached to the lower end, a member, not marked but shown here passing up from sheaves that are marked 18.

Mr. Corbett: That patent, or patent similar to that, was in the Cleveland suit, and in addition, we are offering here some practical testimony, in addition to the machine. But the testimony or depositions about the operation of the machine were not in the Cleveland suit.

The Court: Did Mr. Turner testify in the Cleveland case?

Mr. Corbett: No.

Mr. Richey: There was testimony in the Cleveland case about the operation of that Weber machine, wasn't there?

Mr. Mahoney: No, I don't think so. There was one machine they talked about.

Mr. Corbett: I think you confuse that machine with the Marion machine in the Cleveland case.

The Witness: The third, G. W. King, steam shovel excavator, patented March 30, 1897. Here we have the boom in red marked D, another portion over here extending out, a member across here, all in red; we have a handle in orange pivoted at the upper end of this boom between the ends of the handle, a bucket, blue, in the bottom marked M, rigidly attached to a member. We have here a member, both pulling and hoisting member, marked N.

Mr. Corbett: This patent was not in the Cleveland suit, Your Honor.

The Court: Is that correct, Mr. Richey?

Mr. Richey: I think that is right.

The Witness: This one is a British patent, Jubbs, A. D. 1903, issued May 20, No. 11496. Here the boom is shown marked A in red, a handle in orange pivoted in this boom, points between the ends of the handle, those being marked J, the scoop marked K, blue, with the lower end arranged to adjust here on the handle slightly, a hoisting and pulling member marked 6.

Mr. Corbett: That patent was not in the Cleveland suit, Your Honor.

The Witness: This one, O. J. Olson, deceased, power shovel, No. 826,051, patented July 17, 1906, a boom in red marked 13, pivoted at its lower end to raise and lower, a stick in orange pivoted between its outer ends and the boom, bucket in blue marked 25, a pulling line 28, a hoisting line marked 14.

Mr. Corbett: That patent was in the Cleveland suit, Your Honor.

The Witness: The next one, J. G. Fairbanks, excavator, No. 892,508, patented July 7, 1908; a boom in red marked 15, pivoted at the support of its lower end, but not pivoted to rise and fall; a handle, in orange, pivoted between its ends and outer end of the boom; a scoop in the lower end marked 49 in blue, a pulling line marked 56, attached to the open end of the scoop, a line 22, a hoisting line shown here in black, attached here, and an additional line here attached to the upper end of the handle, the other end attached to the lower end, center of the rod around brake mechanism.

Mr. Corbett: That patent was in the Cleveland suit, and there was a catalog picture of it, but no explanation of people familiar with it, and we have taken depositions of a man or men who operated that machine.

Mr. Richey: Your Honor, of course we dispute the argument. It was in the Cleveland suit.

Mr. Corbett: I have said it was in the Cleveland suit.

The Witness: The next one, C. W. Rood, excavating machine, 1,057,457, patented April 1, 1913. Here is a boom in red, marked C, pivoted at its lower end and held at the top, another boom marked E, pivoted near the lower end of the first boom in red, a construction here, a dipper handle made up of two bars marked G, or two pairs of bars, on the lower end of this a boom, blue, marked F, a hauling line marked H, and hoisting line marked I.

Mr. Corbett: That patent was in the Cleveland suit, Your Honor.

The Witness: J. G. Fairbanks, No. 1,056,268, patented March 18, 1913; boom marked 7, an arm from this boom marked 11, both in red, a triangular shaped handle or stick in orange marked 12, a scoop or bucket in blue marked 16, a hauling or pulling line marked 24, a hoisting line marked 22, and third line marked 23.

Mr. Corbett: If Your Honor please, I made an erroneous statement there. The depositions which we took, that was not in the Cleveland suit, relate to the operation of this Fairbanks machine, by the man who actually operated it, so that it is this Fairbanks, No. 1,056,268.

Mr. Richey: Well, there was testimony in the Cleveland suit about the use of that machine.

Mr. Corbett: There may have been something taken from the catalog. But these depositions are by the men who run the machines.

Mr. Richey: Well, there was testimony of its use and where and how it was used.

Mr. Mahoney: Only in the catalog.

The Witness: This one, S. M. Bishop, power shovel, 1,100,804, patented June 23, 1914. A boom marked F in red, pivoted at the lower end to raise and lower, a handle in orange marked Y, pivoted at the upper end to the boom, a line marked 7 and attached to the outer end of the boom, a hoist line, and another line V attached to one end of the scoop, the scoop in blue marked X.

Mr. Corbett: This patent was in the Cleveland suit, Your Honor.

The Court: Both of the Fairbanks patents were in the Cleveland suit?

Mr. Corbett: Yes.

The Witness: H. L. & W. Sweet, and C. B. F. Hutchins, excavating machine 1,208,230, patented December 12, 1916. Here a triangular boom in red 57, a handle marked 69, orange, pivoted between its ends and the outer end of the boom, a scoop marked 79, and attached to the lower end rigidly through a brace 82, a hauling or pulling member attached to the forward or open end of the scoop, a hoist member 84, shown here, a third member, marked 71, attached to the upper end of the handle above the pivot point.

That completes the eleven.

The Court: Well, that is ten, isn't it?

The Witness: Well, I was not counting Clutter.

The Court: Well, you have gone over ten prior art patents.

The Witness: Yes.

Mr. Edgerton: The last one was in the Cleveland suit, Your Honor.

The Court: Well, then, all of them were in the Cleveland suit except 3 and 4 of your list there.

Mr. Corbett: We are trying to give Your Honor a few of the prior art patents with relation to the back hoe.

The Court: Are there some other prior art back hoes?

Mr. Corbett: Oh, yes.

The Court: How many?

Mr. Corbett: Oh, probably as many as we have looked over here.

The Court: As many more?

Mr. Corbett: Yes. Your Honor, this witness is going to discuss and explain some of the machines, back hoe machines, prior art back hoe machines, that have actually been operated, and about which we wish to offer depositions at this time. We would like to offer the depositions, and if Your Honor is willing, we would like, in the case of probably three or four of these depositions, to read parts of the depositions to the court so as to give the court a clear understanding of the machines about which the expert is going to testify, and which he is going to compare with the patent in suit.

The Court: Well, I prefer you read the whole deposition; then I won't have to go over it again.

Mr. Corbett: All right, Your Honor, if you would rather do that. There are some parts, of course, of every deposition that are not important.

The Court: Well, if it is not important that I should ever read it, just say so. Just as you choose.

Mr. Corbett: Well, it is just a matter of time saving.

The Court: I know; you are quite right about it, every deposition has a lot of things in it that turn out to be unimportant.

Mr. Corbett: I only want to read three or four depositions, and we will go right to them.

The Court: All right.

The Witness: Your Honor, there are eleven in here. There is one that we didn't refer to. There is one here we didn't get in the record there. Some of these charts have one on one side and one on the other, and this is one that I missed.

The Court: Is this the Mahoney?

The Witness: D. H. Mahoney.

Mr. Corbett: The situation in the Cleveland suit about this Mahoney patent was this, Your Honor. The Mahoney patent was cited in the Cleveland suit by the defendant, and the plaintiff thereupon took depositions to carry back the date of the Clutter invention back of the filing date of the Mahoney patent, and the defendant in that suit took no depositions in refutation of that. Now, in this case we have depositions. As a matter of fact, we have some nineteen or twenty depositions, some of which are corroborative as to the amount of ground dug and various things of that kind.

The Court: Dating this back of Clutter?

Mr. Corbett: Dating this patent back of Clutter, yes, sir.

The Court: All right; go ahead.

The Witness: D. H. Mahoney, No. 1,194,204, a ditch machine, patented August 8, 1916. A boom 27 in red, pivoted at the lower end. A ditcher stick marked 40, pivoted between its ends in the outer end of the boom, a scoop, blue, marked 38, at the lower end of the handle, a pulling line 50 attached to the open end of the scoop, a hoist line marked 14, attached to the boom, and in one part to the handle, the lower end, and a line shown here in green, 34.

Mr. Corbett: Your Honor, at this time, if you are willing, we would like to offer this Mahoney deposition and read the deposition to you. Could we withdraw the witness pending that?

The Court: Certainly.

Mr. Mahoney: I hereby offer the deposition of Daniel H. Mahoney in evidence.

The Court: This is the deposition of the inventor, is it?

Mr. Mahoney: Yes, this is the deposition of the inventor, and we have a great many supporting depositions, testifying about the machine.

Mr. Corbett: Your Honor, I want to say in connection with this deposition that there are some photographs in evidence as exhibits in the deposition, and we have enlargements of these devices, and if there is no objection, we will put the enlargements on here, and let you have the original exhibits.

Mr. Mahoney: I am offering in evidence in connection with the deposition Defendants' Exhibits 1 to 9, inclusive, that were offered in evidence during the taking of the deposition.

The Court: Any objection to any of these Exhibits, Mr. Richey?

Mr. Richey: Any statements of fact in the Exhibits we object to as hearsay, unless they are corroborated by the witness. This catalog—I don't know what is in it.

Mr. Mahoney: In the course of the taking of the depositions there are a number of objections made by counsel.

The Court: Well, then I will hold those over.

Mr. Richey: I think I ought to say that our position on the Cleveland case record is that their claim was double-barrelled, with reference to this Mahoney patent. The Court of Appeals didn't mention it.

Mr. Corbett: Their record shows, as we see it, that after the taking of depositions by the plaintiff to carry back the date of Clutter, back of Mahoney, the Mahoney patent was never urged by the defendant against the Clutter patent. It was used in the suit against the Wagner patent, which was a later patent, but was never carried back.

Mr. Richey: Well, his position with respect to Mahoney and Wagner was substantially the same as his position wth respect to Clutter.

Mr. Corbett: We will argue that the Wagner patent is an entirely different patent. The Wagner patent, of course, is not in this suit.

The Court: The Wagner patent is what?

Mr. Richey: Is not in suit here.

Mr. Corbett: It was in Cleveland, but not here.

Mr. Richey: The outstanding difference was that Wagner did not have a link here; (indicating on diagram).

Mr. Corbett: There were other features that were not involved in that case. I might say also in the Cleveland suit, there was much talk about the Mahoney machine not being a commercial machine.

The Court: Not a commercial success?

Mr. Corbett: Not a commercial success, but no information whatever about the operation of that machine was before that court.

DEPOSITIONS FOR THE DEFENDANTS
Taken at Cincinnati, Ohio.

NOTICE OF TAKING TESTIMONY.

MR. PHILIP E. SIGGERS,
918 F Street, N. W.,
Washington, D. C.

MESSRS. RICHEY & WATTS,
1090 Union Trust Building,
Cleveland, Ohio.
Attorneys for Plaintiff:

Please take notice that the defendant herein will take the testimony of Daniel H. Mahoney who resides at North Bend, Ohio, more than one hundred (100) miles from the place of trial herein, for use on behalf of the defendant at the final hearing of this cause, before Helen Williams, a notary public in and for the county of Hamilton, Ohio, who is not of counsel nor interested in this cause, at the office of Helen Williams, Room No. 1107, Union Trust Building, Cincinnati, Ohio, on the 10th day of September, 1929, at ten o'clock a. m., and thereafter from day to day as the taking of the deposition may be adjourned; and such testimony will be so taken in accordance with the provisions of Sections 863, 864 and 865 of the Revised Statutes of the United States and the Federal Equity Rules.

You are invited to attend and cross-examine.

EDWIN P. CORBETT,
Attorney for Defendant.

Dated at Columbus, Ohio, this 5th day of September, 1929.

Service of the foregoing Notice hereby acknowledged.

P. E. SIGGERS,
Attorney for Plaintiff.

PRINTER'S NOTE:

A like Notice was issued on behalf of The General Excavator Company and was signed by Mr. Edward L. Reed.

The following deposition was taken on behalf of both defendants, pursuant to the above notice, at the office of Helen Williams, a notary public, Room 1107, Union Trust Building, Cincinnati, Ohio, commencing at ten o'clock a. m., Tuesday, September 10, 1929. Counsel for all parties being present.

DANIEL H. MAHONEY, a witness called by defendants, being first duly sworn, testified as follows:

DIRECT EXAMINATION by Mr. Mahoney.

My name is Daniel H. Mahoney. I reside at North Bend, Ohio. My age is 75 years. At the present time I have no occupation. Prior to the year 1900 I was railroading, that is, supervisor on the Baltimore and Ohio Railroad. I was in charge of maintenance of way—charge of track men; laboring men on the railroad. I worked for them until 1905, twenty-four years and five months. I left their employ in March, 1905. I am not related to counsel for The Osgood Company conducting this examination. After I left the Baltimore and Ohio Railroad Company, I went with The Mahoney Railway Ditching Machine Company. I was one of the organizers of that company. This company was organized or incorporated in 1903, and was engaged in manufacturing railroad track ditchers—roadbed ditchers. I now produce a catalogue to show the kind of machines this company was manufacturing and selling. This is one of the catalogs that was used to solicit business for The Mahoney Railway Ditching Machine Company.

Mr. Mahoney: Catalog just produced and identified by the witness is hereby offered in evidence as Defendants' Exhibit 1, Mahoney Railroad Ditching Machine Company catalog.

(Narrative continued.) The Mahoney Railroad Ditching Machine Company was a successful company up to 1911. After that it began to play out, the orders didn't come in for it, not fast enough to keep a shop going. The railroad ditcher shown in our catalog, Defendants' Exhibit 1, was a patented machine. I was the inventor of the railroad ditcher shown in this catalog and obtained United States Letters Patent therefor. When the business of The Mahoney Railroad Ditching Machine Company began to fall off, I started on what was called a land ditcher. By land ditcher I mean something other than a

railroad ditcher. This first land ditcher I tried to make on the order of the railroad ditcher, cut and dump on one side. The photograph just handed me is a Mahoney Railroad Ditching Machine Company's circular. It represents the first ditcher that I made after the railway ditcher. This photograph is a true and correct representation of the first other than railroad ditcher designed and manufactured by me. Referring to this photograph, I am able to identify one of the persons shown on the right hand side as Patrick Lanahan. The man to the right of the machine is Mr. Lanahan.

Mr. Corbett: This is the same machine here (referring to enlarged chart).

The Court: You are talking about Exhibit 2?

Mr. Mahoney: Yes.

(Narrative continued.) I have indicated the position of this man by the letter "A" on the photograph. Referring again to the photograph on the left hand side of this circular I identify the man on the machine as my son, Walter Mahoney. He died in 1918.

Mr. Mahoney: The photograph of The Mahoney Railroad Ditching Machine Company circular just identified by the witness is hereby offered in evidence as "Defendants' Exhibit No. 2," and the Notary is requested to mark the same "Photograph of Mahoney Railroad Ditching Machine Circular Side Ditching Machine."

Mr. Edgerton: The Exhibit No. 2 is objected to as being irrelevant, incompetent, insufficiently proven, and as secondary evidence.

(Narrative continued.) I would like to correct my statement about the date of my son's death. I think he died in the fall of 1917. Referring to the machine shown in Defendants' Exhibit No. 2 the scoop on this machine had a hinged door. Referring to the photograph in Defendants' Exhibit 2 on the right hand side I recall that it was taken at Perry D. Green Addition, Vincennes, Indiana, New Road Sewer. This machine was used on the Perry D. Green road in the summer of 1911.

I am the inventor Daniel H. Mahoney referred to in the printed copy of United States Letters Patent 1,194,204, issued August 8, 1916, on an application filed February 10, 1915, which has just been handed to me.

Mr. Mahoney: The printed copy of United States Letters Patent 1,194,204, issued August 8,

1916, is hereby offered in evidence as Defendants' Exhibit No. 3, and the Notary is requested to mark the same: "Printed Copy of United States Letters Patent, 1,194,204, dated August 8, 1916."

(Narrative continued.) I built the machine shown in Mahoney patent 1,194,204, dated August 8, 1916.

Referring back to Defendants' Exhibit No. 2 the machine shown in that exhibit could not be used for dumping in the wagons. It had some other objectionable features. It wouldn't throw the material to both sides.

I commenced to build the machine shown and described in the Mahoney patent 1,194,204, in the year 1912. This machine was tested out several times in the year 1913 and was completed in that year. The completed machine of the type shown in United States Letters Patent 1,194,204 was first used at Gorham, Illinois. Before this machine was taken to Gorham, Illinois, I took it down south of Vincennes on a ditch, and tested it out there. This machine worked all right on this ditch. The only trouble I had was the power attachment. The traction engine leaked and gave me lots of trouble, and I had to bring it in but the machine did the excavating work satisfactory. It done the work well, the machine itself did. My best recollection of the date that this machine was used on the farm south of Vincennes, Indiana, is that it was the summer of 1913.

The photograph which has just been handed to me represents the ditching machine shown in the Letters Patent. This photograph was taken on some ditch work south of Vincennes, Indiana. It was taken on the same ditch work which I have referred to as having taken place on the farm south of Vincennes in the summer of the year 1913. This photograph truly and correctly shows the machine that was used by me in the summer of 1913, on the ditching work on the farm south of Vincennes, Indiana.

Referring to Defendants' Exhibit No. 1 the photographs shown on the last two pages of this catalog is the machine which was used by me in the summer of 1913 on the farm south of Vincennes, Indiana.

Mr. Mahoney: The photograph which the witness has just identified as being photograph of the machine used by him in the summer of 1913 on a farm south of Vincennes, Indiana, is hereby offered in evidence as Defendants' Exhibit No. 4, and the Notary is requested to mark the same: "Photo-

graph of the Mahoney Ditching Machine used on farm south of Vincennes, Indiana."

(Narrative continued.) Referring to Defendants' Exhibit 4 the scoop was moved toward the machine in order to fill. This would be called an in-stroke ditcher. The machine had a pivoted boom, pivoted at the base. The scoop-carrying member was pivotally connected with the boom. The scoop-carrying member or ditcher stick extended above its point of pivotal connection with the boom. The scoop was connected with the scoop-carrying member or ditcher stick, by a bail connected to the dipper, and the dipper stick. The connection of the bail with the scoop was a pivotal connection. The upper end of the scoop-carrying member or ditcher stick had a pivotal link thereon. The location of the pivotal link I will mark on the photograph with the letter "A". This link had a sheave at the other end of it. This machine shown in Exhibit No. 4 had means for raising and lowering the boom. It was capable of loading into wagons or depositing on the ground, either one, or on either side of the ditch.

In operating this machine the dipper was thrown back, to the position back here, from the machine, and then drawn forward by cables toward the machine, in that way, then lifted by drums and swung to either side, whichever side the operator desired. When the scoop was up it was dumped by being tipped from the back to the front with a line to the man on the machine.

This machine was operated on the farm south of Vincennes in the ditching operation heretofore mentioned, by Walter Mahoney. I was present at the operation. I do not remember any other persons present at that time excepting Walter. To remedy the condition caused by connecting the steam line between the tractor and my machine, we brought the machine back to Vincennes and put a steam boiler on it, the machine proper. After that the machine had its own power plant thereon. After we placed the boiler on this machine we took it to Gorham, Illinois, to dig a ditch. The reason we took it to Gorham, Illinois, was that a party had a contract at Gorham for digging ditches, and he had some hard material to cut, and he asked me to go down with him. The man's name was William Volmer. This machine was taken to Gorham, Illinois, for this work in October, 1913. The part of the drainage work at Gorham that this machine worked on was called a lateral ditch. The work on this lateral

ditch began at the main ditch, a ditch to drain into the main ditch. My machine started the work on this lateral ditch at or near the main ditch. They tried with teams first, and it was gumbo; they couldn't cut around. When my machine was brought there for ditching very little had been done, and what was started wasn't completed by the teams. I would estimate that the work done by the teams before I got there, well fifty feet in length wasn't completed. My machine completed the work on this ditch. We cut about eleven or twelve hundred feet. Walter Mahoney operated this machine at Gorham. I was there to start the machine in on the work, and saw it operating there. I was there on two different occasions while the machine was digging this ditch. At the time my machine was brought out there for Mr. Volmer a man accompanied me. He was Mr. Volmer's man, Barekman. There was two other men from Vincennes, Indiana, that went to Gorham, Illinois, to see this machine while it was being used on this particular job, August Bovy, and an engineer there, I don't just recall his name. I remember now that his name was Lind.

(At this point reading of the deposition was stopped for the noon recess.)

(Friday afternoon session, March 6, 1931.)

(Reading of deposition continued.) I cannot tell exactly how long it took to complete this lateral ditch with my machine at Gorham, Illinois. It might have been a couple of weeks' working time, but the machine was down there a couple of months. Mr. Volmer paid for the work and sent the machine back to Vincennes. The ditch was completed by my machine. The soil at this point was gumbo mud, very hard to excavate and hard to discharge from the dipper. My machine done very well under these conditions, done the work.

The next job upon which this machine was used was at Vincennes, Indiana, digging a sewer for the city. J. J. Quinn was the contractor. My machine began the work on this sewer system for J. J. Quinn at Vincennes in 1914, in June, I am satisfied June is right. The photograph just handed me represents the machine that dug the sewers at Vincennes, Indiana. This photograph shows my machine. I recognize the buildings in the photograph there as being on Buntin Street, in Vincennes, Indiana.

This photograph truly and correctly shows the machine that done the work for Quinn at Vincennes, Indiana, in June, 1914. The ditch shown in the photograph was actually dug by this machine, and the photograph was taken while the machine was in the actual digging of this particular sewer system at Vincennes, in June, 1914. The photograph shows the same machine which was used at Gorham, Illinois. In this photograph I recognize my son and myself and John Leahy. I mark my son's position in the photograph by letter "A". My own position in the photograph I mark with the letter "B". Mr. Leahy's position I mark with the letter "C".

Mr. Mahoney: The photograph which has just been identified by the witness as being the photograph of the actual machine used at Gorham, Illinois, and at Vincennes, Indiana, is hereby offered in evidence, and Notary is requested to mark the same: Defendants' Exhibit No. 5, Photograph of Mahoney In-Stroke Ditcher used at Gorham, Illinois, and Vincennes, Indiana.

Mr. Edgerton: The photograph Exhibit No. 5 is obviously a photograph made from another photograph. We, therefore, call for the production of the original photograph and object to Exhibit No. 5 as secondary evidence.

Mr. Reed: The witness has testified that the photograph Exhibit No. 5 correctly illustrates the machine built by him and used at Gorham, Illinois, and at Vincennes, Indiana, and that the photograph was made while the machine was on the job at Vincennes. The photograph is competent for this purpose, regardless of whether it is an original or reproduction.

The Court: That is this Exhibit 5 objected to?

Mr. Mahoney: Yes.

The Court: Are you still objecting to that, Mr. Richey?

Mr. Edgerton: The photograph was objected to only as to secondary evidence; in other words, what they introduced at that time was obviously a photograph made from another photograph. Later, they developed the original photograph.

Mr. Richey: We are not objecting to it any more.

The Court: All right. You are not objecting to any of these exhibits from 1 to 5, then, as I understand it.

Mr. Richey: No, Your Honor.

(Narrative continued.) The photograph now handed me is the same ditching machine working at Vincennes excavating a sewer for large sewer tile, I think they were five feet. My machine excavated the ditch shown in this photograph. I was present nearly every day while my machine was digging the ditches of the sewer system at Vincennes for J. J. Quinn. Walter Mahoney operated this machine while it was being used for Quinn at Vincennes. This photograph was taken while the work was being excavated, and truly and correctly shows the machine used at Vincennes beginning June, 1914, for J. J. Quinn.

Mr. Mahoney: The photograph which has just been identified by the witness as being a photograph of the Mahoney Ditching Machine used at Vincennes, Indiana, in digging sewers for J. J. Quinn, beginning June, 1914, is hereby offered in evidence and the Notary is requested to mark it: "Defendants' Exhibit No. 6, Photograph of Daniel Mahoney Ditching Machine excavating large ditch."

(Narrative continued.) The ditching at Vincennes was on one ditch on different streets, all one ditch. This ditch did not have laterals connecting to the main ditch. My machine worked on the main ditch. I don't know whether I can recall any of the other streets on which this machine operated at Vincennes. I know all the streets well enough. Buntin is one, and Main Street was another and Hart Street. I couldn't recall all the streets now. My machine completed this work for Mr. Quinn and I was paid for the work. I think this work was completed for Quinn in October, 1914. While ditching for Quinn on this particular job my machine was used quite often for dumping the dirt into wagons. I saw very little of Mr. Quinn while working on this job, but his foreman, John Leary, was very enthusiastic over the machine and said he certainly would recommend it. I am pretty positive Leary was his name.

As to the help received from The Mahoney Railroad Ditching Machine Company for the development and building of the machine shown in Defendants' Exhibits 4, 5 and 6, the company had a small amount of money in the bank and after that became exhausted I got no assistance. The money I received from the company was not sufficient to pay for time, labor and material to build this machine. I used my own money. After the com-

pletion of the work on the storm sewer system at Vincennes for J. J. Quinn this machine was taken to Westphalia, Indiana, and put to work in a ditch similar to the one at Gorham. I don't remember the name of the particular ditch on which it was used at Westphalia. It was a lateral ditch from a large ditch. Walter Mahoney operated this machine at Westphalia. The machine completed the ditch at Westphalia. The men were paid for this ditch at Westphalia. I got nothing out of it. The men were paid in accordance with the first contract made with a man named Stein, for team work. The machine used at Westphalia was the same machine shown in Defendants' Exhibit No. 5. As to the date that the machine shown in Defendants' Exhibit 5 was used for digging the ditch at Westphalia, it was taken there in October, put to work in October, 1914. I would say that it finished the work there about December. I left there and took employment with the railroad company at St. Louis before that was finished. I was out of means and had to go to work there on that account. The company I was with didn't furnish me any money. After the machine shown in Defendants' Exhibit 5 completed the work at Westphalia, Indiana, it was sold up in the country. I don't know the party. It was sold by Mr. Watson in our company. I do not know the present location of the machine. I have never been up there.

Q. Did you ever receive any orders or inquiries for a machine like that shown in your United States Letters Patent No. 1,194,204? A. I received an inquiry from the Oliver Brothers, New York.

Q. Can you produce the original letter from Oliver Brothers making this inquiry? A. I'll see. (Witness produces a letter.)

(Mr. Mahoney hands letter to court.)

The Court: It seems to be a carbon copy, Mr. Mahoney. How does that happen?

Mr. Mahoney: I don't know, Your Honor. It will probably appear here about this.

The Court: All right, go ahead.

Q. Is this the letter you refer to as having been received from Oliver Brothers, New York? A. It is.

Q. Will you please refer to this letter and state the date thereof and to whom it was addressed? A. This letter is dated October 31, 1914, and it is addressed to the Mahoney Railroad Ditching Machinery Co., Vincennes, Indiana.

Q. Was that letter actually received by the Mahoney Railroad Ditching Company? A. Yes, we received this letter.

Q. Was an answer ever made to that letter from Oliver Brothers? A. I think I have an answer, yes. Let's see.

(Witness produces answer.)

(Mr. Mahoney hands letter to court.)

Q. Was this letter which you have just produced mailed to Oliver Brothers, if you know? A. Yes. This is a copy of the letter.

Q. Is that a carbon copy, an exact carbon copy made at the time the original letter was made? A. I think it is.

Mr. Mahoney: The letter from Oliver Brothers just produced and identified by the witness is hereby offered in evidence as Defendants' Exhibit No. 7 and the notary is requested to mark the same: Letter from Oliver Brothers, New York, dated October 31, 1914, to the Mahoney Railroad Ditching Machine Company, Vincennes, Indiana. The letter dated December 1, 1914, from the Mahoney Railroad Ditching Machine Co. to the Oliver Brothers Purchasing Company, New York, is hereby offered in evidence as Defendants' Exhibit No. 8, and the notary is requested to mark the same: Answer of Mahoney Railroad Ditching Machine Co. to letter from Oliver Brothers dated October 31, 1914.

The Court: How far do you claim your patents date back?

Mr. Richey: I beg your pardon, Your Honor, the Clutter patents?

The Court: Any one of them.

Mr. Richey: The Clutter patents, I don't remember the date of the filing of the application, but in the Cleveland case we showed it went as far back as April, 1914.

Mr. Corbett: Are you going to show that here?

Mr. Richey: I think you about admitted it.

Mr. Corbett: No, no. You will have to prove it in this case. We will cross examine those witnesses if you are going to prove it.

Mr. Richey: I don't know whether it will be necessary.

The Court: April, 1914?

Mr. Richey: Yes, that is what we showed in that case.

Mr. Corbett: His filing date was February, 1915; that was a day later than the filing date of the Mahoney patent.

The Court: The filing date here is February 11, 1915.

Mr. Richey: I think Your Honor has in mind what our defense is against these things—they do not embody invention.

The Court: That is one of them.

Mr. Richey: I think most of them are back of us. The patents are back of anything that Mr. Clutter did.

Mr. Corbett: Unless you prove it.

Mr. Richey: We agreed to that and have been over it. As far as most of these machines—Clutter had three machines, and then the patented machine.

Mr. Corbett: You mean Mahoney.

Mr. Richey: Mahoney, I mean; and I think the three machines are back of the filing date of Clutter, and two of them are back of the 1914 date.

Mr. Corbett: Of course we maintain they are substantially the same machines, Your Honor.

Mr. Richey: It is a matter of argument. I think that will give Your Honor a notion of the relative dates.

The Court: This Mahoney patent was before the Cleveland Court?

Mr. Richey: Yes.

Mr. Corbett: Not as a reference against Clutter; it was too late for Clutter.

Mr. Richey: We argued both ways.

Mr. Corbett: Under the circumstances it was not urged by the defendant after the introduction of that testimony.

Mr. Richey: I don't know. I think we will have to check that up. We took both grounds: that it did not negative the novelty; and, secondly, that it was too late anyway as far as the Clutter patent was concerned; and we talked about that this morning; and then there was the Wagner patent.

The Court: All right.

(Narrative continued.) On the inquiry of Oliver Brothers dated October 31, 1914, the Mahoney Railroad Ditching Machine Company had a machine manufactured by the Lidgerwood Company of New York with the intention that it be sold to the Oliver Brothers. The photo-

graph just handed me shows the machine we had made at the Lidgerwood factory in New York and is a true representation of that machine. The machine was never sold Oliver Brothers. After I had gone to see them and had this machine made they said that trench digging had to be done by hand on account of exposure to gun fire. The machine was shipped to Vincennes, Indiana, and it was finally sold to Lanahan Contracting Company. I don't think that was all the name. They put a clam shell dipper on this machine and used it at Vincennes for loading gravel in a gravel pit.

Mr. Mahoney: Photograph just identified by the witness as being a photograph of a machine manufactured by the Lidgerwood Co. of New York for the Mahoney Railroad Ditching Machine Co. is hereby offered in evidence as Defendants' Exhibit No. 9 and the notary is requested to mark the same: Photograph of machine built for the Mahoney Railroad Ditching Machine Company by Lidgerwood Co.

(Narrative continued.) I think this machine was sold to Lanahan about 1922. The machine was completed by Lidgerwood in the spring of 1915. Between the year 1915 and the time it was sold to Lanahan the contractor Mr. Watson had it in his barn at Vincennes.

(The hearing before the Notary taking these depositions was adjourned until ten a. m. September 11, 1929.)

(The hearing before the Notary was resumed according to adjournment. The parties present as before.)

(Narrative continued.) The Mr. Watson referred to in my previous testimony was a stockholder of the Railroad Ditching Machine Company. He came in the company in 1913. I think it was in the spring. Mr. Watson is now dead. At the time he came into this company he was in good financial condition. He did not put any money into the company. He bought stock from another party. He did not help me to finance in any way the development of the machine shown in Defendants' Exhibit No. 5. He never gave me any help on this machine. I was an officer of the Mahoney Railroad Ditching Machine Company from the beginning, Vice President and Manager, and hold the same position yet. The machine shown in Defendants' Exhibit No. 9 which was built by the Lidgerwood Co. for the Mahoney Railroad Ditching Machine Company was financed by Mr. Watson and W. L.

Ewing. They sent me to New York after receiving the Oliver letter, and I made arrangements with the Lidgerwood people to build this machine. They gave me expense money to New York, and nothing was paid on the machine until it came to Vincennes. The machine was then paid for by Mr. Watson and Mr. Ewing. Mr. Ewing was a stockholder. He is now living at Vincennes, Indiana. I never had any control over the disposition of the machine shown in Defendants' Exhibit No. 9. Mr. Watson had control of the machine.

Cross Examination by Mr. Siggers.

The machine shown in the first photograph of the catalog Defendants' Exhibit No. 1 was placed on the rear flat car of a string of flats with a cable extending to a hoist on the car next to the locomotive. When the dipper was lowered the dipper was filled by the movement of the train. It was then drawn up the inclined guide rail and dumped behind the machine. It dropped back into the ditch onto the guide rail. The same process was gone over until that portion of the car was filled. The ditcher was then drawn forward by a cable to continue the work. The dipper was hinged to the boom—no, it was attached by bails to the boom and the bails were riveted to the sides of the dipper and pivoted to the boom. That is, the bails were. There was a strap riveted to either side of the boom, making two straps to a bail. There was only one bail. There was no connection between the boom and the guide rail, it rolled over, had a roller under the boom and rolled on the guide rail.

Mr. Corbett: Pardon me a moment. I believe it will facilitate the thing. It will have to be cleared up later. Your Honor realizes that a great deal of this early cross examination relates to that railroad ditcher operating on the side upon which we are not relying. The record may show that. I am not sure.

The Court: All right. I know what you mean.

(Narrative continued.) The lifting cable was attached to the boom at the guide rail. There was no cable or chain or rope of any kind attached to the scoop except a dumping rope attached to the bottom, the dumping bottom. This machine employed a boom which was so mounted as to swing both vertically and horizontally, being guided, however, by a guide rail with which it had contact by means of a roller on its under side. The

guide rail was at right angles to the car on which the machine was mounted. The boom was pivoted on one side of the machine, the other end was attached to the dipper. Referring to the second photograph of the same exhibit the scoop is hung by the bail from the end of the dipper boom. The dipper can swing freely and on the end of the boom except as it was restrained by gravity or the weight of the load it carries. There was a single hoisting cable used for operating the boom and also pulling the machine forward as the loading progressed. The same cable which lifts the load to the top of the guide, then lets the dipper drop back by the operator releasing his line or slacking his line. There was not a cable or rope shown in the left hand foreground of the two pictures, the cable that lifted the load done all that work, drew the machine forward when necessary. There was only one cable employed and that cable served the dual purpose of hoisting the boom and moving the entire machine forward. There was a vertical mast employed at the top of the guide rail. The mast was stationary but the guide rail could be adjusted in or out for different width ditches and in going to sidings to clear trains. The guide rail was stationary after it had been adjusted. The hoist cable at one end was tied to the top of the mast, the other end went down the mast to the base of the machine, straight down the mast to the base of the machine, then extended over the floor of the flat cars to the hoist engine. The hoist engine was just an ordinary double drum hoist engine with a winch on it. Most of them was of the Lidgerwood type. The hoist cable lead to one of the two drums. The other drum was not in use as a general thing. The drums were on different shafts and were operated at different times. The second drum was on most of these machines that we purchased. The hoist engine was a hoist of standard make, a Lidgerwood. The winch was not employed on the machine for any other work. The cable lead to one drum and was wrapped on that drum. The cable was employed for drawing the entire machine along the flat car in this manner. After dumping the load the boom would be pulled up to what we called two blocks, that is pulled up to the mast and that made it rigid there while the cable was doing the pulling. The other end of the cable was dead-ended on the drum.

Q. Now you have said that one end of the cable was attached to the top of the mast and the other end of the cable was attached to the drum, and you have also said

that the same cable was employed for hoisting the boom and swinging the dipper and for moving the entire machine over the flat car. Will you please explain how this was done? A. Why, as I explained before, the boom is pulled up to the post, the mast, and then the machine is pulled by this single cable from the hoist.

Q. But that can be done, Mr. Mahoney, if you have one of the cables attached to the mast and the other end attached to the hoisting drum? A. The one end attached on the hoisting drum wound around the drum. The other end is on the dipper boom and when they engage the drum it pulls the machine forward.

Q. Will you please explain further how the cable moves the entire machine forward? What was the cable pulling against? A. You must understand that this hoisting engine wasn't on the machine, it was up next to the locomotive,—

The Court: Is there very much of that? They do not make any claim for this machine, this box car.

Mr. Edgerton: There is a good deal of this.

The Court: Why not skip it then?

Mr. Richey: As far as I am concerned, we may skip that.

The Court: They do not make any claim for it.

Mr. Edgerton: We will find the part where they take up the next.

The Court: See if you can find it.

(Conference between counsel.)

Mr. Edgerton: I think we are agreed.

Mr. Mahoney: We are not relying on Defendants' Exhibit 2, only to show this man had the development in mind and was proceeding along that line; and are relying on Plaintiff's Exhibit 2 just to show that he was in the business and trying to get a proper ditcher.

The Court: You agree Defendants' Exhibit No. 2 would not negative it?

Mr. Mahoney: We never made any claim for that, only to show the history and development of the Mahoney later machine.

(Narrative continued.) Referring to Defendants' Exhibit No. 2 I did not take out a patent on that machine. I never applied for a patent on that machine.

Q. Then the notice consisting of the word "Patented" which appears below each photograph in Ex-

hibit No. 2 is incorrect, is it? A. Are they in here? Yes, they were not patented.

Q. Did you authorize the issue of the circular of the Mahoney Railroad Ditching Machine Company which is alleged to be reproduced in Defendants' Exhibit No. 2? A. I did.

Q. What was your purpose in advertising the machine as patented when you had not even applied for a patent? A. Well, this was on the principle of the railway ditching machine which we had patented.

Q. Then you think that the two machines, that is the machine of Exhibit 2 and the machine of the first three photographs of Exhibit 1 are identical in principle, do you? A. The principle is about the same, loaded on one side of the carriage, and dumped behind it.

(Narrative continued.) We only made one machine of the type shown in Exhibit 2. After a test I concluded that it was a failure. It didn't work well. It didn't do the very best kind of work and I concluded it wouldn't be a success. The filling of the dipper by cable connection from the boom on the front end gave most of the trouble. It didn't do well. It wouldn't tip over. It seemed not to have power enough to fill and that it was hard to draw forward. We filled the dipper by the boom and dipper being pulled forward from a beam at the front end. The beam appears in the left hand photograph of Exhibit 2. I have marked it with the letter "A" on the photograph.

The Court: Which photograph is that now?

Mr. Edgerton: Exhibit No. 2, Your Honor.

The Court: You are not claiming anything for that. Go ahead.

(Narrative continued.) There was a cable which was wound around the drum driven by a gasoline engine and which was guided to the dipper or scoop by means of sheaves or pulleys. The beam "A" carried several guiding sheaves for the cable, possibly three. The cable was attached at one end of the dipper and extended to the sheaves on the beam "A" and back again to the drum on the end. Looking at the machine in the left hand photograph of Exhibit 2 the beam "A" was located at the far end of the machine and the dipper is at the near end of the machine ready to begin excavating. The dipper was mounted to the boom from beam "A", connected with the boom from beam "A". The dipper was on the

end of a short beam which was pivoted to the outer end of beam "A". The dipper beam, I couldn't just say now what the length was, but twelve or fourteen feet. From testing this machine I found that the machine would cut a ditch six feet deep and transfer tile to a depth of seven feet. The dipper stick I don't see it in the photograph. It isn't in the trench, it's behind the men I think. I have marked the dipper stick or dipper beam with the letter "B" on the left hand photograph. I can't find it on the right hand photograph. I marked the left hand photograph with the letter "S" to identify the dipper. The dipper was pivoted to the dipper stick. The purpose of the upright frame and the downward slanting I-beam on the machine was that when the dipper was filled it was pulled up to the slanting I-beam and continued on up by the pulley or traveller sufficient distance to dump behind the machine. The slanting I-beam was movable at the horizontal and was pulled with the filling of the dipper and when the load was raised why the beam came backwards sufficient to dump behind the machine. There were rollers provided for the slanting I-beams so that it traveled freely along the horizontal beam. The slanting beam moved back and forth as the dipper moved back and forth lengthwise of the machine. There was a chain or cable attached to the dipper and extending up to the slanting beam and along underneath the slanting beam to the top of the frame and thence downwardly to the engine. The cable referred to was employed for hoisting the dipper when loaded. The dipper traveled upwardly along the slanting beam when loaded. I abandoned the manufacture of the machine of the type shown in Exhibit 2 after experimenting with it. I didn't think it would do the work satisfactorily so I abandoned it. My recollection is that it was abandoned in 1911. I have not the original leaflet or advertisement of which Defendants' Exhibit 2 is a reproduction. I may have some at home in North Bend.

Q. Did you give the original leaflet to Mr. J. J. Mahoney?

Mr. Mahoney: Objected to as immaterial and irrelevant.

A. I am not right sure where it was. I suppose I did.

Q. When did you do this? A. Been some time now, I expect about four months.

Mr. Siggers: Counsel for plaintiff hereby gives notice of their intention to apply for an order from the court for the production of the original booklet from which Defendants' Exhibit No. 2 is reproduced, inasmuch as Exhibit No. 2 is not the best evidence.

Mr. Mahoney: It appears from the record that there was never any claim that the circular offered was the original and the photograph was properly identified by the witness as being a true and accurate representation of the machine to which it relates and is therefore properly best evidence under the rules of evidence.

Mr. Siggers: It is elementary that when an original exists a reproduction is not the best evidence.

Q. Referring to Exhibit No. 4 will you please describe how this machine is operated? A. Is operated by a dipper, dipper stick and boom and mast.

The Court: Is that still Exhibit 2? They do not claim anything for Exhibit 2?

Mr. Richey: It is kind of mixed up.

The Court: Of course if it is mixed up you have to read it.

Mr. Mahoney: It is not mixed up.

The Court: See if you can find where he refers to something else.

Mr. Richey: I meant to say, in cross examination you dodge back and forth.

The Court: Sometimes you do; sometimes a logical cross examiner, like this man, would not do that.

Mr. Richey: We shall do the best we can to separate the chaff from the wheat.

Q. Referring to Exhibit No. 4—I think I have the place, Your Honor.

The Court: All right.

(Narrative continued.) Referring to Exhibit 4 this machine is operated by a dipper, dipper stick and boom and mast. In operating, the ropes or cables used were a cable for dumping the dipper, that's one. And there is one for filling the dipper, is two. And there is one for hoisting the boom, is three. And one for swinging the boom, is four. There were two cables for swinging the boom sidewise in opposite directions, on two small drums. When one of these drums is moved by power the cable which wound on that drum swung the two booms in one direction and when the other small drum was rotated by power the booms were swung in the opposite direction. In addition to the lines which I have enumerated

there was a dump line, attached to the back end of the dipper. The scoop was pivoted on the lower end of a dipper stick by means of a bail. The scoop was free to oscillate or swing on the bail.

To identify the line which was used for dumping the scoop I have marked it with the letter "K" on Exhibit 4. In order to dump the spoil the lower end of that line is attached to the scoop—now sometimes we use a small sheave in there. In this case I think we had a small sheave and a line went up and was made fast to the boom. To mark the spot on the boom where the dumping line was made fast I have marked the photograph Defendants' Exhibit 4 with the letter "X". There was a winch employed for winding the rope "K" which dumps the scoop. I will identify this winch in Exhibit 4 by marking it with the letter "W". The winch was driven by the engine, and was slacked by the operator when not in use, and when he wanted it dumped he pulled on the line about three turns on the winch. The winch "W" rotated continuously with one of the drums and when the operator desired to invert the scoop to dump the spoil he pulled on the loose end of the rope "K", several turns of which were made about the winch "W". The rope "K" was used for throwing the dipper back for filling purposes. That is, the rope "K" moved the dipper out of position to start an excavating stroke. The scoop swung on the bail of the dump.

Q. What was the purpose of the line shown extending from the mast in the direction of the dipper and below the boom, referring to Exhibit No. 4?

Mr. Mahoney: Objected to as being indefinite.

Q. I will amend the question by adding that I am referring to the line which crosses the face of the left hand traction wheel at about its midheight, as Exhibit 4 is viewed. A. I can't just recall where that line goes at this time.

(Record shows that the taking of the deposition was adjourned at this time.)

(September 12, 1929, taking of the deposition pursuant to adjournment. Same parties present.)

(Narrative continued.) I had charge of the advertising of the Mahoney Railroad Ditching Machine Company while I was connected with it. I prepared the advertising copy. We did not advertise in trade magazines or publications. Our advertising was done by means of

leaflets and catalogs. I don't recall the name now of our printer; he's a Vincennes printer. He was an old man at that time, I don't know but that the firm is still there in existence. I have got his name now, Crotts Printing Company. I dealt with Mr. Crotts. Referring to Exhibit 4 the line "K" only assisted in throwing the scoop outwardly, when empty it assisted in backing the scoop up.

The parts or falls of the hoisting line I have identified on Exhibit 4 by the letter "H". Referring to the pulley "A" previously identified the hoist line "H" is passed around that pulley. One end of the hoist line "H" is dead-ended or fastened to a movable boom near the outer end. I have marked the point where the hoist line "H" is dead-ended to the boom on the photograph by the letter "Y" The sheave "A" was between two straps, iron straps connected to the dipper stick. These straps extended above the boom. I am referring now to the straps which connected the sheave "A" to the dipper stick. I have identified the boom on Exhibit 4 by means of the letter "B", and the dipper stick or ditcher stick by means of the letter "S". The pivot axis of the ditcher stick "S" is indistinct. I can't see it. I can't find it. The dipper stick did not extend above the pivot axis or above the boom except the straps attached to it. I have identified the straps which were attached to the dipper stick by the letter "Z" on Exhibit 4.

I marked the straps on which the sheave "A" is mounted. I can see the straps which extend from the upper end of the dipper stick "S". These straps were secured by a pivot bolt to the boom. I am marking the straps which connect the dipper stick "S" to the boom "B" on Exhibit 4 with the letter "R". I think the straps "Z" on which the sheave "A" was mounted were connected to the straps "R". I can't see it yet, I am uncertain.

With reference to the line "K" assisting in throwing the scoop outwardly, when the scoop is lifted it was in a vertical position with sheave "A" and boom, and when the dipper is used farther back it was drawn by line "K". When I say farther back I mean farther back to commence digging the trench. There was no other line. It was hung from the boom above and dropped down vertically when lifted out of the trench; when placed in position to refill the line "K" pulled the

dipper farther back. You are correct in summarizing my answers to preceding questions by stating that the scoop or dipper moved out to a plumb position solely under the action of gravity and that it was moved out beyond a plumb position solely by power imparted by the line "K" by means of a winch "W" and the operator standing at that point.

Q. You have testified that the line "K" dumped the scoop or dipper and you have also testified that the line "K" was employed to move the scoop out beyond the plumb position? Or you have further stated that the scoop was free to swing on the lower end of the ditcher stick. Now if the line "K" pulls the scoop upwardly and is on its pivotal axis, the scoop would be in dumping position when it had been moved out beyond plumb. In other words if the line "K" pulled the scoop outwardly wouldn't it hold the scoop in dumping position? A. It would providing there was no means of holding it down.

Q. Was there any means for holding the scoop down, as you have expressed it; and if so, describe that means? A. There was a strut in the dipper stick to the top rear end of the dipper, which held the dipper down until released from that strut.

Q. Will you identify the strut on Exhibit No. 4, employing the letter "T"?

(Witness marks photograph.)

Q. Was the upper end of the strut "T" rigidly secured to the dipper stick "S"? Or was it pivoted? A. It was pivoted.

Q. Does the pivotal part appear in Exhibit No. 4? A. It does.

Q. How was the lower end of the strut "T" secured to the dipper or scoop? A. It dropped over in position without being held by any thing.

Q. Then the strut "T" did not prevent the swinging of the scoop in a counter clockwise direction as the scoop is viewed in Exhibit No. 4, to put the matter differently, the strut "T" did not prevent the open end of the scoop from swinging upwardly freely on the scoop pivots? A. The filling cable covers that. The strut ditcher didn't cause anything of that kind. The filling cable attached to the bail would govern the dipper from turning over, upwardly.

(Narrative continued.) The strut "T" would allow the dipper to swing away from the lower end of the strut

after the dipper was lifted by the boom. The rope "K" held the back of the scoop up against the lower end of the strut "T". The strut "T" was a freely hanging member but there was some appliances on there that I don't just get now that carried it to a certain position to engage the dipper. The action of gravity was depended upon to effect the engagement of the lower end of the strut "T" with the dipper at certain times during the operation of the machine. There was a small piece of angle iron in a semi-circle to receive the lower end of the strut "T". This piece of angle iron was on the scoop. This piece of angle iron provided a shoulder. When the boom was raised the strut was released below at the angle iron. It was the lifting of the boom which raised the front end of the dipper, permitting the strut to release. As far as I now know there was no element for kicking or pushing the strut "T" off the angle iron except as I stated.

Q. I call your attention to a rope or cable which leads from the machine downwardly and thence across the face of the left hand traction wheel of the machine of Exhibit No. 4 as viewed in the photograph, and thence apparently to a member passing through the dipper stick "S" and apparently engaging the strut "T" and will ask you to explain the function of the rope and member. A. Why, I think that line was used by the operator to pull the strut back over dipper when being loaded, before being filled.

Q. After the strut "T" had been placed in engagement with the shoulder on the scoop how was the scoop inverted to dump its load? A. The lifting of the scoop released that strut and it dropped on the back side of the dipper. The line "K" was then drawn for tipping the dipper.

Q. How could the lifting of the scoop release the strut? A. When the front end was lifted by the bail and boom the dipper came up on the front end and that released the strut.

Q. Did the line "K" move the scoop out beyond plumb for dumping? A. No, only when empty, moved it back for filling.

(Narrative continued.) Sometimes the scoop would be pulled beyond plumb by the line "K". The line "K" didn't exert any force until it was sufficiently high and the boom turned around far enough to dump. Then the

operator pulled on the line "K", well, I guess that would be right, it was on the winch, sometimes the material was sticky and in pulling we would get the dipper out beyond the vertical position or the plumb position. In dumping line "L" had a tendency to pull it back of plumb position. When you started to dump beyond the plumb position the line "K" would immediately dump the contents of the scoop. We would never dump beyond plumb position except when the material was pretty stiff and sticky, the dipper would be pulled until it was turned over on its nose or mouth whichever you call it. The usual operation except when working in very unreliable or sticky material was to dump the scoop held approximately in plumb position. The strut "T" played no part in dumping the scoop. The machine of Exhibit No. 4 employed a vertical mast and a fixed inclined boom. The mast of the machine on Exhibit No. 4 I am marking on that exhibit with the letter "M" and similarly marking the fixed boom with the letter "F". The fixed boom "F" was always maintained at an angle of about sixty degrees, I judge that would be about it. The line which the operator pulls in order to engage the strut "T" with the angle piece on the scoop I am marking on Exhibit 4 with the letter "L". When you start an excavation with the machine of Exhibit No. 4 the bottom of the scoop always engaged with the ground. The weight of the boom pressed the scoop bottom against the bottom of the ditch if desired. Otherwise the operator could hold the boom in position just as it hit the ground. The operator had a friction drum. The operator held the boom in position by holding his drum, releasing the drum and holding it by brake that is, the hoisting drum. The weight of the boom was taken off the scoop whenever it was desired to keep the scoop from lying flat on the bottom of the ditch, as when seeking to make it penetrate more deeply. The operators on this machine were three. One of them was the runner or engineer operating the booms, swings; and the other, handline man operated the lines for dumping and adjusting the dipper struts; the other one was the fireman. The engineer controlled the hoist line "H" and the hauling line which pulled the scoop toward the machine and also the two drums controlling the two lines for the sidewise swinging. The hand rope man had charge of the ropes "K" and "L". His position was near the winch "W" so that he could tighten the rope "K" upon the revolving winch whenever that was neces-

sary. Exhibit 4 shows the traction engine that was used with this machine in our first test. I did not dig in rocky ground with any of our land ditching machines. Gumbo ground was the hardest that we ever dug in. Very tough material. At the time this photograph which is reproduced in Exhibit 4 was taken we were not digging in gumbo, it was very loose dirt, loose sandy soil. The location of the tests which is illustrated in Exhibit No. 4 as near as I can tell was about a mile and a half south of Vincennes, Indiana. At this first test south of Vincennes about a hundred feet of trench was dug. We did not continue with this ditch becaust we had a leaky traction, couldn't keep up steam, water in it and had to be pulled back to Vincennes. I don't recall at this time for whom this ditching was done. We never went back to complete the ditch.

The Court: What year did he say that was?

Mr. Mahoney: The summer of 1913.

Mr. Edgerton: Yes, this is 1913.

(Narrative continued.) We were never paid for this work. It was a test run on a farm. The location of this farm was south of Vincennes, close to the Wabash River. I requested the privilege of testing this machine from the owner of the farm. I never paid him anything for the use of his land. The ditch was laid out and staked for a drainage ditch. I couldn't say whether the ditch was ever used. We never filled up the ditch. I left the ditch open, what I done of it.

Q. The digging of that 100 foot ditch was merely an experiment with the machine, was it not?

Mr. Mahoney: I object to the word "experiment".

A. It was.

Q. Will you please put in the record a statement of the way in which that farm can be reached proceeding south from Vincennes, Indiana. A. It's south of Vincennes, I would think about a mile and a half, as near as I can judge it is about half a mile from the Wabash River.

Q. In what direction relative to the river? A. South.

Q. Did you have to cross the river over a bridge or ferry before reaching this farm? A. No, sir, it was on the Indiana side, I think it's called the River Road.

Q. Did the farm extend all the way to the river bank? A. Couldn't say exactly. I went in a lane from the River Road.

(Narrative continued.) I am not able to describe more definitely the way in which the farm can be reached than to say that it is a mile and a half down the River Road in Vincennes, then turn in a lane to where the work was done. I did know the name of those people but I never went back, and have forgotten it. The land which you turn into led off from the left of the road. I didn't get hold of a new traction engine or have the first traction engine repaired, because I stayed at the stop at Vincennes putting a boiler on a machine and didn't go back. It was some time before I got the boiler. My recollection is that it was a couple of months. I purchased the boiler at Dayton, Ohio, the name of the firm I can't recall just now. It was a new boiler. I can't say how long it took to install the boiler on the machine. We done some other work on railroad business. The machine was in the shop for several months. We were doing work on other ditchers and I didn't expect to go back there any more. So we didn't rush the work of putting the boiler on, installing the boiler. From the time this first traction engine was used with the machine on the farm a mile and a half south of Vincennes, Indiana, until the time when I reconstructed the machine in condition for use in the field I would say it was about six or seven months. It might have been as long as nine or ten months. At that time we had in our shop about four men. I couldn't say how long they were engaged on the work of the railroad ditchers. Our shop was closed for a while, because of lack of funds. As near as I can think it was about six weeks. It was closed off and on in winter and in the fall of the year, principally winter. Looking at photograph Exhibit No. 4 I think the time that photograph was taken was July, maybe August. July at any rate. You have called my attention to the man standing adjacent the corn in the cornfield which appears in Exhibit No. 4 and you state that you are particularly calling my attention to the fact that the corn is several feet over that man's head and ask me whether it was July, August or September when that picture was taken. I will say that it was not as late as September. It must have been in August. It was in the year 1913. I know it was in the summer time, the weather was very hot, and I would say, looking at the picture I would say it was in August. Corn gets very tall out in that country, it has a rich soil. I don't think it was as late as September. I haven't anything except my recollection

at this time as to when the picture of Exhibit No. 4 was taken, nothing only my recollection, the hot weather and the high corn. It was in the summer. I know it wasn't as late as September.

In 1913 and 1914 the men in our shop were paid by cash. We drew a check for the payroll money every week, weekly, except when we were closed down. I have not under my possession or under my control at this time any books of the Mahoney Railroad Ditching Machine Company. Mr. Watson got some of them, and someone stole the others in addition to my blue prints. Mr. Watson got possession of some of the records of the company in 1914. This was the Mr. Watson who was a stockholder of the company. He subsequently died. His death occurred between three and four years ago. I think he retained some of the records of the company up until the time of his death. I haven't seen any of the records while they were in Mr. Watson's possession. My relations with Mr. Watson were always cordial so far as I know. I talked to him about the matter and asked him what could be done to revive it. As to why the records were turned over to Mr. Watson I couldn't say just why. I was away from there. He wanted to take care of the records, I guess. He took them.

Q. Did you move away from Vincennes about that time?

Mr. Mahoney: Objected to as being indefinite.

Mr. Siggers: I am referring of course to the period when Mr. Watson obtained some of the records or books of the Mahoney Railroad Ditcher Machine Company.

Mr. Mahoney: The question still remains indefinite.

A. No, I didn't.

Q. Did your company go out of business so far as selling and manufacturing was concerned about the time that Mr. Watson obtained possession of some of the company's records? A. The company really never went out of existence, but couldn't operate without means.

Q. Wasn't the last land ditcher made by your company completed in 1914?

Mr. Mahoney: The question is objected to as being indefinite as it does not specify what is meant by land ditcher, as this company was in the business of manufacturing several types of ditchers.

Q. I will amend the previous question by adding that the term land ditcher is used in precisely the same sense

that it was used in Defendants' Exhibit No. 1, the catalog, and in the direct examination of this witness.

Mr. Mahoney: As amended the question is still objected to, as the catalog and direct examination of this witness specified the various types of land ditchers to which the witness' testimony referred.

A. The land ditcher was completed in '13, and put on the sewer work in Vincennes in '14.

Q. That wasn't the same machine, was it? That is to say, the machine which you have testified was employed in 1914 at Vincennes is not the same machine as the one which you have testified was tested out on the farm one and a half miles south of Vincennes, Indiana, about August of 1913? A. It's the same machine excepting it had a boiler, and some small changes made.

Q. Will you describe what changes were made in the machine tested out on the farm south of Vincennes before the sewer work was done in Vincennes in 1914? A. Why, not much of any, some alignment of the sheaves to work or direct. Well, that's about all that I can remember.

Q. Refresh your recollection by referring to Exhibits Nos. 4 and 5 and state whether or not the machine of Exhibit No. 5 was substantially a reconstruction of the machine of Exhibit No. 4? A. Why, it was substantially as far as I can see.

Q. Then there were quite a number of changes made in the machine of Exhibit No. 4 in order to get the machine of Exhibit No. 5, is that correct?

Mr. Reed: The question is objected to as misleading and not based on the witness' answers.

Mr. Siggers: The witness' answer to cross interrogatory 463 was that the machine of Exhibit No. 5 was substantially a reconstruction of the machine of Exhibit No. 4.

Mr. Mahoney: The witness' answer stands for itself.

A. There was some changes.

(Narrative continued.) Besides the alignment of the sheave and placing the boiler on the machine there were no changes as far as I can see except dispensing with the struts. The hoist line of Exhibit 4 as compared to the hoist line of Exhibit 5 are so far as I can see practically the same. The end part of the hoist line in the machine of Exhibit 4 is dead-ended directly upon the

boom. In the machine of Exhibit 5 the end part of the hoist line extends over a boom extension to a point near the lower end of the stick where it is attached or dead-ended. In the machine of Exhibit 4 the sheave "A" is connected by straps or links "Z" to the straps at the upper end of the ditcher stick. The corresponding sheave of Exhibit 5 is mounted directly upon the upper end of the dipper stick. It went around a sheave at the upper end of the dipper stick. That is there was a cable passing around the sheave mounted directly on the upper end of the dipper stick and not connected to the dipper stick by links as in the machine of Exhibit No. 4. There was no hand line in the machine of Exhibit No. 5 corresponding to the strut operating line "L" designated in Exhibit No. 4. Referring to Exhibit No. 5 I will mark the line or cable which was employed to invert the scoop for dumping by the letter "P". The line "P" in Exhibit 5 was fastened or dead-ended to the outer end of the boom. The line "P" could be used to assist in moving the ditcher stick outwardly and it could be used for inverting the scoop to discharge the spoil. The line "P" extended from the outer end of the boom down to the scoop and around a sheave, which, as seen in Exhibit 5, was mounted on the back of the scoop and thence upwardly to a sheave on the boom located near the point where the ditcher stick is pivoted to the boom and around a sheave and back to the machine where it was wound upon a link or drum driven by the engine. I will mark the sheave adjacent the ditcher stick pivot around which the line "P" passes with the letter "N". I will mark the point where the line "P" is made fast to the end of the boom with the letter "O". I will mark on Exhibit 5 the point where the hoist line is dead-ended to the ditcher stick by the letter "R". I will mark the sheave at the outer end of the boom which the hoist line passes around on Exhibit 5 with the letter "S". I will mark the sheave on the fixed boom by which the hoist line is passed by the letter "T" on Exhibit 5. I will mark all the parts of the hoist line which appear in the space between the fixed boom and the movable boom of the machine of Exhibit 5 with the letter "V". I will also use the same letter to designate that part of the hoist line which extends down to the connection "R" of the ditcher stick. I will mark all parts of the hauling line which appear in Exhibit No. 5 with the letter "L". One end of the line "L" is dead-ended to the boom. The

point where the line "L" was dead-ended to the boom I will mark with the letter "M". The scoop of the machine of Exhibit 5 was freely swingable on the bail by which it is attached to the scoop stick except as the filling bail held it in position. I mean the hauling line bail. I have marked the hauling line bail in the machine of Exhibit 5 with the letter "H". I think the traction wheels of the two machines of Exhibits 4 and 5 are the same. As to the mast of Exhibit 5 compared with the mast of Exhibit 4, it is the same mast, except that wood carried the sheave and wood is hinged to the mast. That permits the lines to bend at that point and following the boom to a swinging position. I made this change in the construction of the mast because continuous swinging of the boom broke the cables at that point, broke them off. I am referring of course with my experience to the machine shown in Exhibit No. 4. As to the link or stay connecting the upper end of the mast with the fixed boom in the machine of Exhibit No. 4, when the machine of Exhibit No. 5 was prepared for use in the field, I think there was a change made there, possibly to pull it closer to the mast. Comparing Exhibits Nos. 4 and 5 the two stays are different. My recollection is that this change was made by putting in a longer stay to permit that boom to lean forward. As far as the canopy over the engine is concerned, the men might have put a cover of tin over them but I didn't build a canopy. Referring to the machine of Exhibit No. 5 beside the steam boiler which was mounted on the frame, the frame carried drums, hoist engine and winch. The drums and winch were driven by a double cylinder engine. The engine which was mounted on the machine of Exhibit No. 5 was employed to drive five drums if you call the winch as one of the drums. I would hardly call that a drum because it only runs with the engines. The drums were driven by friction and were held and released in the engine with a brake. In that way it was independent. By friction I mean friction clutches. The machine of Exhibit 4 had a separate traction engine, which could travel over the road like any ordinary threshing machine of the present day. Each of the lines "V", "P", and "L" of the machine of Exhibit 5 was wrapped around one of these engine driven drums. There were two lines wrapped around two drums for swinging the booms on opposite sides of the machine for dumping the spoil. There was no latch to keep the scoop from swinging on the bail, that

is turning over. Referring to Exhibit No. 5 the open mouth of the scoop is pointing upwardly. As to the purpose of the members shown at the back of the scoop, and apparently made fast to one side of the scoop which is in the foreground of photograph Exhibit No. 5 I don't know what that is on there for. There was no such member on the scoop of Exhibit No. 4, not that I now know of. When it was desired to swing the dipper stick of Exhibit No. 5 out of plumb position the line "P" was used. It was also used for inverting the scoop to discharge its spoil. In that case the filling line had the dipper load and scoop while this was turning over, while the dumping line was tipping the load.

The Court: That machine did not have any drop bottom on it?

Mr. Siggers: No, Your Honor.

The Court: All right. Go ahead.

(Narrative continued.) The hoisting line "V" pulled the dipper stick out beyond the plumb position to some extent. The line "P" assisted the line "V" as in the previous machine, that is the machine of Exhibit No. 4. We never dug any rocky soil with the machine of Exhibit No. 5. There were four teeth on the front end of the dipper of the machine of Exhibit No. 5.

Q. If one or more of these teeth was engaged under an obstruction and considerable power was applied to the hauling line "L" what would happen?

Mr. Reed: The question is objected to as calling for an opinion. The witness has stated that he never operated the machine in rocky soil and any answer to the question must necessarily be theory.

A. Why it would tear something loose, something down if the operator did not check it in time to prevent it, it would certainly tear something loose.

The Court: Is that common with this machine?

Mr. Reed: No, Your Honor. That is common with any machine; if you put enough power upon it, it will pull anything loose.

(Narrative continued.) The hauling bail "H" or filling bail was connected to the front of the scoop at a point or points above the teeth which I have mentioned. The scoop would not cant or turn over when a deep bite was taken because the bail connection on the scoop was so far in front that the back part of the dipper always

remained down, and it wouldn't turn over because the filling bail was too low down and too far in front, and it is attached to the cutter teeth on the side. If a root of a tree was engaged by the teeth of the scoop of the machine in Exhibit 5, while both the hoisting line and the hauling line were power actuated I think the scoop would be torn loose from the pulling bail. If a root of a tree were engaged you couldn't continue to excavate without grubbing and chopping the base of the tree and the root out of the way. Referring to Exhibits Nos. 5 and 6 the two men with picks were not grubbing and digging out tree roots. This ditch is being made now for the street. There were no tree roots in the way. It may have been that the men shown were picking around a water line. They had a good deal of that to do to keep from cutting the pipes. You have asked why the ditch shown in Exhibit No. 6 is apparently so shallow that it will not receive the five foot storm sewer pipe sections appearing at the right side of the photograph of Exhibit No. 6. I think the machine is just starting at the point where the heavy pipe or large pipe is to be put in on this street. As to the machine of Exhibit 6 digging the entire ditch, the machine dug down to a depth of eight or nine feet, and there was very little sewer work cut below that at any point in town on this particular job. There might have been six or eight blocks of this sewer commenced by hand labor before the machine started to work. I couldn't say whether the machine dug the ground shown in the foreground of Exhibit No. 6 and extending from the foreground up to the machine. As to whether the machine had dug that point in the foreground of Exhibit No. 5, I don't—yes, we must have dug that street all the way through except at the car lines and the railroads.

It is hereby stipulated by Counsel for the several parties that the depositions to be taken at Vincennes, Indiana, in accordance with the notices heretofore served, on Counsel for Plaintiff, shall be postponed from Friday, September 13th, 1929, at two o'clock, to Monday, September 16th, 1929, at two P. M., without further notice, and the time within which defendants may complete their depositions is extended for three days from the present limit.

(The deposition session was adjourned until ten A. M. September 13, 1929.)

(The taking of the deposition was resumed pursuant to adjournment, on September 13, 1929.)

(Narrative continued.) Comparing the booms of Exhibits Nos. 4 and 5, the booms are the same except in length at the top. Exhibit No. 5 shows the boom extended, and the straps to the end of the boom on Exhibit No. 4 were discarded. I am referring to the straps which supported the sheave for the line "K" on Exhibit 4. The booms of Exhibits 4 and 5 are pivoted at the base about the same place. The base connection of the boom in the machine of Exhibit No. 5 has been altered some as compared with the machine of Exhibit No. 4. The two dipper sticks were changed in addition to leaving off the strut "T" of Exhibit No. 4. Referring to the boom in Exhibit No. 4 I think there was two truss rods extending longitudinally with the boom for bracing the same. I have marked Exhibit No. 4 with the letter "D" to designate the two truss rods which extended underneath the boom "B". There were no truss rods on the boom of Exhibit No. 5. I did make the entire boom stronger. The dipper stick of Exhibit No. 5 does not differ much from the dipper stick of machine No. 4. It is a heavier stick. A new timber was used to replace the old dipper stick. The proportion of the dipper of Exhibit 5 is about the same as the scoop of Exhibit No. 4. I think the dipper was reconstructed. The function of the member shown at the back of the scoop that is the face of the scoop which is presented towards the observer as the machine of Exhibit 4 is viewed the member referred to is that which apparently straddles the back of the scoop and which is apparently made out of round rod and which seems to be connected with the lower part of the line "K" is the rod where the line "K" was hooked on to the dipper or pulley wheel, that line "K" runs through at that point. That member served as a yoke or bail for the line "K". I will identify this yoke by reference letter "J" on Exhibit 4.

Q. Referring to the last photograph in Exhibit No. 1, you have testified that the machine of that photograph is the same machine as the machine illustrated in Exhibit No. 4. Please mark on the photograph of Exhibit No. 1 which I have referred to indicating the location of the strut "T" using the same letter "T"?

(Witness marks photograph.)

Q. Please also mark the stick "S", the boom "B", the line "K" and the fixed boom "F" in the same page of Exhibit No. 1.

(Witness marks photograph.)

Q. Please explain the operation of the machine of Exhibit No. 5 by explaining how the three lines were pulled and slacked off to cause the scoop to excavate? A. The operator pulled them when necessary for certain movements.

Q. Pardon me, Mr. Mahoney, you haven't answered my question. A. The pulling line was wound on the drum and when the dipper was full the hoisting line would lift the dipper and when swung to the side for dumping the line "P" was drawn by the operator on the winch to tip the dipper.

Q. In order to get the scoop in position for digging, was the hauling line or filling line "L" slacked off? A. It was slacked off and the operator would pull on line "P", the dumping line, pulled it according to what was necessary to put the nose of the dipper in the ground.

Q. At the same time that the rope "P" had power imparted to it through the winch to turn the scoop to the proper angle it was necessary for the other operator to lower the boom and the scoop by releasing the hoist line "V", was it not? A. Not in all cases, he could do whatever was necessary in that.

Q. Starting with the machine in the position shown in Exhibit No. 5, after swinging the scoop sidewise until it was directly over the trench, it was necessary to lower the scoop into the trench by slacking off on the hoist line "V", and if necessary by slacking off the hauling line "L", was it not? A. It was.

Q. When the scoop had descended in the trench until it was about in contact with the bottom of the trench, it was necessary to adjust the scoop by power imparted by line "P" so as to cause the nose of the scoop to take the proper position with respect to the dirt to be excavated, was it not? A. It was.

Q. If the line "P" pulled the back end of the dipper up it was necessary to slack off on the line so as to get the dipper in proper position, was it not? A. It was, and also probably slack line "V".

Q. Did the line "P" during the operation of the machine of Exhibit No. 5 regulate the depth of the cut made by the scoop in each stroke? A. In some instances it did, where the cut wasn't deep enough why the dipper would drop down to a filling position and was drawn by the filling line. The line "P" would

sometimes be slacked in that case, all owing to the way it was pulled in the material.

Q. Referring to the machine of Exhibit No. 5, you could not strike a gravity blow with the teeth of the scoop, could you? A. The dipper would—you would strike gravity blow by tipping rear end up and dropping the hoist line. In that case the teeth would cut into the ground. That's all a matter of knowledge of the operator.

Q. When the line "P" in the machine of Exhibit No. 5 was operated so as to cant the scoop over with the teeth pointing downwardly to the ground, the scoop held up the stick, did it not? A. No, the stick and scoop went down together in the ditch. It was all a matter of holding certain line on the winch.

Q. In order to strike a gravity blow, was it not necessary to release the line "P" and also the hoist line "V" with the hauling line "L" slacked? A. It was necessary to release "P" and hoist line "V", but that was governed entirely by the operator, entirely so.

Q. When the line "V" was slacked off, the boom and stick would descend, would they not? A. They would.

Q. If the line "P" was slacked off, the scoop would immediately cant or turn with its nose pointing upwardly as shown in Exhibit No. 5, would it not? A. Yes. It would providing the operator would permit it. He's in control of that part of it, and dipper can be carried into the ditch in a horizontal position by his handling of that line.

Q. Was not the scoop so balanced on the bail that when hanging freely its nose would point upwardly as clearly illustrated in Exhibit No. 5? A. It would.

Q. So that unless there was tension on the line "P" the scoop would remain in about in the position of Exhibit No. 5? A. That's right.

Q. Now in striking a gravity blow to deliver an effective blow from the teeth, it is necessary, is it not, for the teeth to be presented downwardly in the direction of of the material which is to be dislodged? A. If the gravity blow is to be directed downward why line "P" will have to be tightened by the operator to such an extent that the dipper and boom will go down together in the trench.

Q. You have testified previously that the line "P", when tightened, will cant the scoop so that the back turns

upwardly and that the line "P" assists the line "V" moving the stick outwardly or away from the machine. Is that not a correct statement of your previous testimony?

Mr. Mahoney: Form of question objected to as there is no reference to any particular part of the previous testimony.

A. It is.

Q. If the line "P" aids in moving the stick outwardly or away from the machine and if that same line must be tightened by means of the winch in order to hold the scoop in such a position that its teeth are directed downwardly, how is it possible to strike an effective gravity blow, that is with the scoop and stick falling to a distance of several feet, with the teeth directed downwardly at the moment of impact with the material being excavated? A. The line "P" holds the rear end of the dipper up to such an extent that when the stroke is made the dipper hits on the rear end and drops forward on its teeth for cutting.

Q. You have not explained how, if the line "P" pulls the stick outwardly against the action of gravity when tightened, it is possible to strike a gravity blow with the line "P" actuated by power? A. I tried to explain that in the other question. The rear end of the dipper is held up by "P" hoist lines "V" is lowered, they both go down together in the ditch until the back end hits the bottom of the ditch, then the front end tips over and comes in contact with the bottom of the ditch.

Q. After the back end of the dipper hits the bottom of the ditch the toothed end of the dipper would strike the bottom of the ditch with the flat under portions of the teeth, would it not? A. It would.

Q. So that the gravity blow struck by the machine was not the sort of a blow delivered with the weight of the stick and the weight of the scoop back of the points of the teeth, the points of the teeth vertically downward?

Mr. Mahoney: Objected to on the ground that the question is not very clear.

A. The weight of the boom and the weight of the dipper and tightening of filling line to a position for that blow and the operator holding line "P" to hold the dipper in a horizontal position, it will drop down into a gravity blow.

Q. You have not answered my question cross interrogatory 599—I asked you whether in your machine the points of the teeth were vertically downward at the time the blow was delivered. A. Not entirely so. To some extent for the purpose of taking hold of the material, the ditch material.

Q. In your answer to cross interrogatory 596 and also in your answer to cross interrogatory 597, you stated that the back end of the scoop or dipper hits the bottom of the trench, first, and then drops forward on its teeth for cutting. At the moment when the dipper hits on its rear end, the teeth are necessarily pointing somewhat upwardly, are they not, or at least they are extending horizontally and not vertically downwardly? A. They are not vertically downward at no time. They are horizontal or sloping downward for the purpose of engaging the material in the ditch.

Q. Am I correct in stating that the only blow struck was in the nature of a forward lurch of the dipper after the back end had hit the bottom of the ditch?

Mr. Mahoney: This question is objected to on the ground that witness' previous answer is perfectly clear and stands for itself.

A. That's right.

Q. Now referring to your patent, Exhibit No. 3—

Mr. Siggers: Exhibit 3 was skipped, was it not, Your Honor?

The Court: No.

Mr. Mahoney: No, No. 3 is the patent.

Mr. Siggers: Oh, pardon me.

Q. Now referring to your patent, Exhibit No. 3, please state whether or not you ever built a machine exactly like the one illustrated in the drawing forming a part of that patent? A. I confined myself as near as possible to this patent 1,194,204.

(Narrative continued.) Referring to line 34 in the machine of patent 1,194,204 this corresponds to line "P" of Exhibit 5. Line 34 corresponds to line "K" of Exhibit 4. All three lines 34 of the patent, line "P" of Exhibit No. 5, and line "K" of Exhibit No. 4 are identical in function, and all three were to be operated by a winch, drum or the like. Comparing the machine of the patent with the machine of Exhibit No. 5, particularly the bail "H" of Exhibit No. 5, with the bail 48 of

the patent both of them are connected in the same manner except that the pulling bail on Exhibit No. 5 has three links of chain in there. It is a fact that in the machine of the patent bail 48 is connected with both the dipper stick 40 and with the scoop 38 by being secured at the pivot axis of the scoop 38 on the stick 40, whereas in the machine of Exhibit 5 the bail "H" is not connected at the pivot axis of the scoop, but is connected both forward and below said pivot axis. With the bail 48 of the patent of the machine connected as shown and described in the patent it would swing the scoop on the lower end of the swing 40 if it was independently connected to the boom as in Exhibit No. 5. I mean the stick. Walter Mahoney operated our land ditching machine. No one else operated it. So far as I know he was the only one that could operate it. I judge it would take a new man quite a little while to become accustomed to it. Mr. Leary identified by the letter "C" in Exhibit No. 5 resides at Bedford, Indiana. I think his first name was Patrick. I am not quite sure about that but I think it was Patrick. I haven't seen Mr. Leary since he was on that Vincennes work. The last I heard of him he was still living at Bedford about a month or two ago. Mr. J. J. Mahoney gave me this information.

In 1913 I can't recall any railroad ditchers being built by our company. There was one or two repaired. In the year 1914 one railroad ditcher was built for the Chicago and Alton Railroad. I can't recall now how many, if any, were built in the year 1912.

Referring to Exhibit No. 9 the photograph of the Lidgerwood machine there were four power lines employed. The hoisting line raised and lowered the boom; the dipper line tipped the dipper; the swinging line swung the boom. This machine was never put in operation, I can't find any lines but the three, I said four. I can only recall three now. I omitted the hauling line for pulling the dipper toward the machine. The four lines I have mentioned were wound upon four engine driven drums. The scoop stick was attached to a bail and the bail was pivoted to the scoop. I am not quite clear the way the lines worked on this machine. It was never put in use, but think it was drawn back by extension of the dipper stick above the boom. I saw the Lidgerwood machine of Exhibit No. 9 rigged for operation at Jersey City, New Jersey, at the Lidgerwood Manufacturing Company. This was shortly after it

was manufactured. I am not positive about the date of this visit to the plant, but it was in the winter of 1914-1915. I think it was after New Year's. The records and books of the company that were turned over to Mr. Watson in 1914 are probably in the possession of the administrators. I don't know what particular books or records that were taken by Mr. Watson in 1914. He took the minute book and the record books. I wasn't really there when they were taken. I think the family of the late Mr. Watson retained possession of these papers or records after his death. I think they have them now. Either the family or the administrator. The records that were stolen, the most that was taken that I knew of was blue prints. I couldn't say as to the books. This occurred in the latter part of 1914. The blue prints were of the land ditcher and the tracings from which these blue prints were made were stolen at the same time. I think all of them were stolen, I don't know where any of them are. I think they are all gone. Referring back to Exhibits 4 and 5 concerning the presence of the strut "T" on the machine of Exhibit 4 and the absence of a similar strut on the machine of Exhibit No. 5, the reason for the absence of this strut on the machine of Exhibit No. 5 is that there was no need of it. The filling bail was hooked so far in front that it held the front end down and no need of the strut. I think the strut "T" on the machine of Exhibit 4 gave the operator trouble at times in getting the strut abuttal against the angle piece on the back of the scoop. I never personally operated any of the machines.

Mr. Edgerton: The plaintiff at this time calls for the production of the original photograph from which Exhibits No. 4, No. 5, No. 6 and No. 9 were made, and the original cut or leaflet of Exhibit No. 2. Furthermore, notice is given to the defendants that if they fail to comply with this request application will be made to the Court for production of the same.

Mr. Mahoney: The originals of the exhibits referred to in the demand by Mr. Edgerton are not within the possession or control of counsel for defendants. The originals from which Exhibits No. 4 and No. 5 were made were obtained from the witness Daniel H. Mahoney and counsel for plaintiff is free to obtain inspection of these originals if the witness can produce them. The originals from which Exhibits No. 2, No. 9, and No. 6 were made are in the possession and under the control

of the legal representatives and heirs of the Watson Estate at Vincennes, Indiana. Counsel for defendants will endeavor to produce the originals of the last named exhibits for inspection when the session is held at Vincennes, Indiana, for which notice has been served on counsel for plaintiff.

(Narrative continued.) Referring to Exhibit No. 7 I answered that letter about the day it was received or a few days later. The carbon copy of the letter which was introduced as Exhibit 8 was written for me by the Lidgerwood people. It was written in the office of the Lidgerwood Company. I know the man who dictated the letter. I think I know his name. It was Backthold. I think the initials CAB that appear at the bottom of Exhibit 8 are his initials. As to the men who were employed in our shop, my son Walter Mahoney was one, a man named Stafford, a blacksmith. I can't think of his name, we called him Smoky Stafford. And two other men—I can't remember their names now. One was a blacksmith's helper and the other fellow worked at different jobs in the shop. I couldn't say where Smoky Stafford is now. He may be at Washington, Indiana. He came to me from the B. and O. Railroad shops. I can't remember what his Christian name was. I never called him anything except Smoky. He went by that name altogether but that wasn't his Christian name. The location of our shop in Vincennes was at the B. & O. Railroad and Harrison Street. I think part of it is still there. The ground we leased from the B. & O. and they wanted it back after we got down in business, they wanted it back for some other industry. What part of it there remains I don't know. The machine of Exhibit 4 was not left on the farm south of Vincennes. It was pulled into the shop at Vincennes the next day after the test. I think it was the next day, not more than two days. The boiler was received from Dayton about two months, six weeks at any rate, after the machine got back to the shop. The machine did not remain in the shop after it was closed down that winter, it was taken to Gorham, Illinois, about the first of October in the fall of 1913.

Q. In some of your answers in the direct examination you have referred to testing the machine. What do you consider a test? A. I consider the test in the corn field.

The Court: We will stop here now. We have come to a good stopping place.

Mr. Mahoney: There is only one more page, re-direct examination, which will finish the whole examination.

The Court: All right finish it.

Thereupon, re-direct examination was read by Mr. Mahoney.

RE-DIRECT EXAMINATION by Mr. Mahoney.

(Narrative continued.) Referring to the photograph on the last page of Defendants' Exhibit No. 1 the machine shown in the photograph is shown discharging the spoil with the ditcher stick extended out beyond the plumb. The machine shown in Defendants' Exhibits No. 4 and No. 5 could be discharged with the dipper stick extended out beyond the plumb whenever the operater wished to discharge the spoil in that position.

The changes which I have testified were made in the machine shown in Defendants' Exhibit No. 4, in addition to placing the boiler thereon were made before this machine went to Gorham.

RE-CROSS EXAMINATION by Mr. Siggers.

Q. Referring to the last photograph in Exhibit No. 1 which you have stated illustrates the machine in a dumping position, the stick is then approximately at right angles to the boom, is it not, with the scoop almost directly underneath the end of the boom or boom extension? A. It is.

Q. Were you able to move the scoop out further away from the machine and still retain the load in the scoop? A. Not farther than it is now, than it is shown now.

Q. That is the extreme position of the scoop, is it? A. About.

Deposition closed.

(Certificate of Notary omitted.)

(The Court adjourned at this point until March 9, 1931, at 1:30 P.M.)

(Trial resumed on March 9, 1931, 1:30 P.M.)

The Court: Is there another deposition?

Mr. Mahoney: Yes; these are depositions taken to corroborate Mahoney's testimony.

DEPOSITIONS FOR THE DEFENDANTS
Taken at Vincennes, Indiana.

NOTICE OF TAKING TESTIMONY.

Mr. Philip E. Siggers,
918 F Street, N. W.,
Washington, D. C.

Messrs. Richey & Watts,
1090 Union Trust Building,
Cleveland, Ohio.
Attorneys for Plaintiff:

Please take notice that the defendant herein will take the testimony of the following people:

Frank J. Kapps, 303 N. 3rd St., Vincennes, Indiana,
Frank A. Lang, 916 Busseron St., Vincennes, Indiana,
Edgar J. Julian, 29 South 7th St., Vincennes, Indiana,
L. B. Read, 508 Main Street, Vincennes, Indiana,
Harry T. Watts, 5th and Main St., Vincennes, Indiana,
Winn Reel, 5th and Main St., Vincennes, Indiana,
D. H. Bond, 1658 Fairground Ave., Vincennes, Indiana,
William Lenahan, c/o Lenahan and Konen, Vincennes, Indiana,
Ernest Vollmer, c/o North Side Building Loan Co., Vincennes, Indiana,
Lyman Barekman, Route 7, Vincennes, Indiana,
William Stein, Westphalia, Indiana,
Mrs. Harry L. Chaney, c/o Union Depot Hotel, Vincennes, Indiana,
Robert E. Lind, 1340 Broadway, Vincennes, Indiana,
Charles B. Hartigan, Apt. No. 2, Alice Manor, Vincennes, Indiana,

all of whom reside more than one hundred (100) miles from the place of trial herein, for use on behalf of the defendant at the final hearing of this cause, before Beatrice K. Miller, a notary public in and for the county of Knox, Indiana, who is not of counsel nor interested in this cause, at the office of Beatrice K. Miller, 213 LaPlante Building, Vincennes, Indiana, on the 16th day of September, 1929, at two o'clock p.m., and thereafter from day to day as the taking of the depositions may be adjourned; and such testimony will be so taken in accordance with the provisions of Sections 863, 864 and 865

of the Revised Statutes of the United States and the Federal Equity Rules.

You are invited to attend and cross-examine.

EDWIN P. CORBETT,
Attorney for Defendant.

Dated September 13, 1929.

Service of the foregoing notice is hereby acknowledged this 13th day of September, 1929.

PHILIP E. SIGGERS,
Counsel for Plaintiff.

PRINTER'S NOTE:

A like Notice was issued on behalf of The General Excavator Company and was signed by Mr. Edward L. Reed.

Mr. Williams: I understand that all these depositions are going in; the deposition as a whole goes in, and if counsel have any objection, they will probably want to make them.

Mr. Richey: Whatever Your Honor wants about them.

The Court: Well, we will follow that procedure on both sides.

The following depositions were taken on behalf of both defendants, pursuant to the above notice, at the office of Beatrice J. Miller, a notary public, Room 213 LaPlante Building, Vincennes, Indiana, commencing at two o'clock P. M., Monday, September 16, 1929. Counsel for all parties being present.

L. B. READ, a witness called by defendants, being first duly sworn, testified as follows:

DIRECT EXAMINATION by Mr. Mahoney.

My name is L. B. Read. I reside at 1217 Busseron St., Vincennes, Indiana. I am thirty-eight years of age. My occupation is that of photographer. I have been employed at this occupation for twenty years. I have examined these photographs just handed me and will state that I took them. There are two different photographs here.

Mr. Mahoney: For the purpose of identification I will ask the Notary to mark these photographs numbers ten and eleven.

(Narrative continued.) The photographs which have been marked for identification as numbers ten and eleven were taken on Buntin Street, between Third and Fourth on August 13, 1929. I personally took these photographs myself. I developed the negatives from which the prints were made. These negatives are now in my possession. I developed the prints from the original negatives. These photographs marked for identification as numbers ten and eleven correctly and accurately represent what they purport to show.

Mr. Mahoney: That's all.

Mr. Edgerton: No cross examination.

Deposition closed.

FRANK J. KAPPS, a witness called by defendants, being first duly sworn, testified as follows:

DIRECT EXAMINATION by Mr. Mahoney.

My name is Frank J. Kapps. I reside at 303 North Third Street, Vincennes, Indiana. My occupation is running a retail shoe store. I have lived in Vincennes all my life. I am sixty years old. I lived at my present address thirty years. The Defendants' Exhibit No. 5 is a ditching machine, the photograph of which was taken at the side of my residence, on Buntin Street. My house is on the corner of Third and Buntin, and that photograph was taken on the Buntin Street side between Third and Fourth. The excavation shown in the photograph was a trench for a sewer. The machine shown in photograph Defendants' Exhibit No. 5 excavated the sewer shown therein. The sewer was a branch of the City storm water sewers—one of the main lines. The machine shown in Defendants' Exhibit No. 5 is Dan Mahoney's machine. I can identify the persons shown in this photograph who are marked "A" and "B". The party marked "A" is Walter Mahoney and the party marked "B" is Dan Mahoney. The party shown in the photograph who I am marking with the letter "D" is my son Marion Kapps. I was personally acquainted with Daniel H. Mahoney and his son Walter Mahoney.

The building which you have indicated on this photograph with the letter "E" is my barn. It is still standing but is now used for a garage. The residence shown in this photograph Defendants' Exhibit No. 5 is William Lagow's. At the time the photograph was taken if I remember correctly that residence belonged to Mr. Yates. The photograph handed me marked for identification as No. 10 is the same view as shown in Exhibit 5, that is it was taken on the same location as that of Defendants' Exhibit No. 5.

Mr. Mahoney: The photograph marked for identification as No. 10 and identified by the witness is hereby offered in evidence as Defendants' Exhibit No. 10. The notary is requested to mark the same Defendants' Exhibit No. 10, photograph of buildings on Buntin Street between Third and Fourth, Vincennes, Indiana.

Mr. Edgerton: The Exhibit 10 is objected to as irrelevant.

(Narrative continued.) The photograph Defendants' Exhibit No. 10 shows the location as it now exists. I have marked on Defendants' Exhibit No. 10 the building shown in Defendants' Exhibit No. 5 with the letter "E". Comparing Defendants' Exhibit No. 5 with Defendants' Exhibit No. 2 the only change that I note on the building marked with the letter "E" is that sliding doors have been changed to swinging doors. Referring to the large brick house shown in both photographs Defendants' Exhibit No. 5 and Defendants' Exhibit No. 10 the changes which I note since photograph Defendants' Exhibit No. 5 was taken is that new porches have replaced the old porches. The fences shown in Exhibit No. 5 have been removed and hedges planted as shown in Defendants' Exhibit No. 10. The photograph just handed me marked for identification with the numeral 11 shows a view of the large house which is shown in Defendants' Exhibits 5 and 10. The photograph marked for identification as No. 11 correctly and truly represents the present condition of the building shown there. This building shown in this photograph faces Fourth Street, but the photograph has been taken from the Buntin Street side.

Mr. Mahoney: The photograph which has previously been marked for identification with the

numeral 11 is hereby offered in evidence as Defendants' Exhibit No. 11 and the Notary is requested to mark the same as "Defendants' Exhibit No. 11, photograph of house on Fourth and Buntin Sts."

Mr. Edgerton: The exhibit is objected to as being immaterial and irrelevant.

(Narrative continued.) As near as I can remember the storm sewer shown in Defendants' Exhibit No. 5 was excavated on Buntin Street in the spring of 1914. Buntin Street was paved after this storm sewer was put in. The paving of this street was completed about November, 1914. I fix that date by the fact that we had been camping, coming back I couldn't get in my barn. I actually saw the machine shown in Defendants' Exhibit No. 5 excavating the sewer shown in the exhibit. The thing about the machine that helped keep it in my mind was that the dipper drew the dirt toward the machine. Prior to seeing this machine I had never seen a machine operate in this manner. I remember that Mr. Quinn had the contract for this particular sewer shown being excavated in Defendants' Exhibit 5. Daniel H. Mahoney discussed this machine with me before it was operated on this particular job. The machine shown in Defendants' Exhibit No. 5 is a correct and true representation of the actual machine which I saw in operation at the location shown in this exhibit. The machine shown in Defendants' Exhibit 5 I know excavated this sewer on Buntin Street the entire length of the square. I have lived at 303 North Third Street where the photograph Defendants' Exhibit 5 was taken some thirty years and so far as I know of no other sewer was put in on Buntin Street between Third and Fourth Streets during that period. The only place I saw this machine in operation was in this block. The machine operated by digging towards the machine.

Q. Did the machine appear to operate satisfactorily or not?

Mr. Edgerton: The question is objected to as the witness has not been qualified as an expert and it is not believed that his opinion is competent.

A. It did.

(Narrative continued.) The photograph Defendants' Exhibit 6 which has just been handed me, shows a sewer trench, and this trench was excavated on Buntin Street between Third and Fourth. The machine shown in the

photograph Defendants' Exhibit 6 excavated all of the trench shown in the photograph. This is the same machine as that of Defendants' Exhibit 5. Referring to Defendants' Exhibit 6 this shows part of my property in this photograph which is the rear part of my lot. I have marked this part of my property with the letter "F". The letter "F" is placed on the part of my property that is the fence on the rear of the lot. The tile shown to the right in the photograph were laid in this trench. I remember that Daniel H. Mahoney discussed the machine shown in Defendants' Exhibit 5 with me before it was operated on Buntin Street stating that the machine had been used before, digging a ditch on a farm. He stated where the farm was but I don't remember now. The operation he referred to was prior to the use of this machine on the storm sewer shown in Defendants' Exhibit 5.

Direct Examination closed.

No Cross Examination.

Deposition closed.

(Taking of deposition adjourned until 10 a.m. September 17, 1929.)

Mr. Mahoney: The Exhibits 10 and 11 that were offered in evidence at the time this deposition was taken, we now offer in evidence here.

(Taking of depositions resumed September 17, 1929.)

Frank A. Lang, a witness called by defendants, being first duly sworn, testified as follows:

Direct Examination by Mr. Mahoney.

My name is Frank A. Lang. I am forty-five years of age. I reside at 916 Busseron Street, Vincennes, Indiana. I am a machinist by occupation and am employed by Lenahan & Konen. I have been employed by this firm for about twenty years, I guess. This firm is engaged in contracting and road building.

I am familiar with various types of machines, used for digging trenches and various kinds of excavating work. I have operated a steam shovel for several years, I don't recall just how long.

I have been handed a photograph of the Mahoney Railroad Ditching Machine circular Defendants' Exhibit

2. I saw the machine shown in the photograph of this exhibit about a mile south of town, on the Perry D. Green Road. The photograph to the right shows this machine on the Perry D. Green road site. Dan Mahoney manufactured the machine shown in Exhibit 2. He is the same Dan Mahoney that was connected with the Mahoney Railroad Ditching Machine Company formerly of Vincennes, Indiana. I am enabled to identify the location of this machine by the oak tree shown in the photograph, by both of these trees for that matter. I recognize J. W. Lenahan in the photograph on the right. We generally call him Will. The man on the right with the cap who has been marked with the letter "A" is Will Lenahan. Referring to the photograph shown on the left of this exhibit the man shown on the machine is Walter Mahoney. I don't believe I know this other fellow. This machine was used on the Perry D. Green Road in 1911. I fix that date because that was the year I was married. Lenahan & Sons as the company was then known had the contract for building the Perry D. Green Road. I was employed by Lenahan & Sons at that time. The Perry D. Green Road began on Willow Street, crossed over the ditch, over the top of the hill, and I don't remember now —I believe that it went straight through to Mosquito Bend. I believe that our company did some grading and clearing, on this road before the machine shown in Defendants' Exhibit 2 was used, but as to the length of time the road had been worked on I don't remember, several months I presume. But the machine shown in the photograph was used in the summer of 1911. The machine shown in the photograph Defendants' Exhibit 2 was used approximately several weeks on this road job. Mr. Mahoney wasn't so well satisfied with it and decided to take it back to the shop and make some changes on it. After it was taken back to the shop it was never used on the Perry D. Green Road again. After the machine shown in Defendants' Exhibit 2 was returned to the Mahoney shops I think it was a couple of months later before I heard again from Dan Mahoney. As to how I came to hear from him again, I think I just happened along there by his shop and he called me in. He might of called me at home, I don't remember just which way it was. He wanted to show me a sketch that he had made as to the changes in his machine. The sketch he showed me showed a machine different from Exhibit No. 2. In the sketch he changed the machine and put the boom behind the machine, on the back so that you could swing it either way you wanted it to. He pulled the bucket

toward him, and he could swing either way he wanted to dump it. He could throw the dirt on either side whereas with the machine of Exhibit 2 he had to dump the dirt behind the machine. The machine shown in Defendants' Exhibit 4 I think was the same machine which Dan Mahoney disclosed to me in the sketch that I had previously testified about. I saw the machine of Defendants' Exhibit 4. It was built by Daniel Mahoney. As to the date when this machine was completed by Daniel Mahoney, it must have been in the latter part of 1912 or the beginning of 1913. After Dan Mahoney completed this machine he took it out in the country somewhere where this picture was taken. He got a tractor engine to hook on it. I think I saw the machine before it was taken to the country. Referring to the operation of the machine shown in Defendants' Exhibit 4, I think the operation might be described as follows. The dipper was let down in the hole, there was a line on the front end of it that pulled it in the dirt to load the bucket—toward them. Then the line here pulled it up, and he had what he called the friction swing that enabled him to swing it either way, then he had another line here that tipped the bucket to dump the load, as near as I can explain it. The sheave which is marked with the letter "A" on Defendants' Exhibit 4 was hinged on the top of a stick. The stick stuck through the boom a little piece, I don't remember just how far it was now. The sheave "A" shown on Defendants' Exhibit 4 was pivotally connected to the ditcher stick in the same manner as the sheave 43 is shown pivotally connected to the top of the ditcher stick in Mahoney patent 1,914,204, Defendants' Exhibit No. 3. The machine shown in Defendants' Exhibit 4 was the first in-stroke ditcher I ever saw.

The machine shown in Defendants' Exhibit 4 was brought back from the country by Dan Mahoney. I think I saw the machine after he brought it back. The machine shown in Defendants' Exhibit 5 is that machine of Exhibit 4 after he had mounted a boiler on the chassis, and used it here in town digging a sewer trench. I don't know whether that job that the machine of Exhibit 5 was used on in Vincennes had any particular name, it was a sewer job that was going on here at that time. I don't recall the name of the contractor, but I know that Mahoney dug the biggest part of that ditch with this machine shown in Defendants' Exhibit No. 5. It was

quite a big job. I saw the machine shown in Defendants' Exhibit 5 excavating on this sewer on Main Street, between Eighth and Ninth, and, oh, I saw it in fifty different places, I don't just recall where it was at. The machine of Defendants' Exhibit 5 was operated the same as the one on Defendants' Exhibit 4 there. I would say that the trench shown in Defendants' Exhibit 5 would dig well, I saw it dig eight or nine feet, I expect it would dig deeper than that, I don't see why it couldn't. Defendants' Exhibit 5 looks like the same machine I saw operating in Vincennes on the sewer job. I recognize in Defendants' Exhibit 5 the picture of Dan Mahoney marked "B" here. I don't recall the other fellows. I recognize the man on the machine as Walter Mahoney. His position is marked by the letter "A". The machine shown in Defendants' Exhibit 5 we all thought worked good on this sewer job. It seemed to me like it was better than that trenching machine they had here. I believe it was a Buckeye. This thing dug more ditch and faster than the Buckeye machine. The machine shown in Defendants' Exhibit 5 had side fins or cutter teeth which I have marked with the letter "X" on the photograph. I think after the sewer job in Vincennes this machine was used in southern Illinois or Missouri, something like that. I don't remember whether it was used in any other work in this part of the state of Indiana, I can't remember exactly. I think the machine shown in Defendants' Exhibit 5 must have been used on the storm sewer in Vincennes in the latter part of 1912, or 1913. But it wasn't very long after we made the changes in the original machine. I am certain that the machine shown in Defendants' Exhibit 5 was used on the big storm sewer job in Vincennes.

Mr. Mahoney: At this point I wish to offer in evidence certified copies of proceedings had before the Commissioners' Court of Knox County, Indiana, showing when the Perry D. Green road contract was let and when the work was completed, and the Notary is requested to mark it "Defendants' Exhibit No. 12, certified copies of proceedings had before the Commissioners' Court of Knox County, Indiana, with reference to the construction of the Perry D. Green road near Vincennes, Indiana, in Knox County."

I am also offering in evidence at this point certified copies of proceedings had before the Board

of Public Works of the City of Vincennes, Indiana, with reference to Sewer Improvement Resolution Number One for the construction of storm water sewer system for the City of Vincennes, Indiana, showing to whom said storm sewer contract was awarded, and the date of beginning and completion of the work, and the Notary is requested to mark the same "Defendants' Exhibit Number 13, certified copy of proceedings with relation to the construction of storm sewer system number one in the City of Vincennes, Indiana, during the year 1914."

Mr. Edgerton: Exhibits twelve and thirteen are objected to as immaterial.

Direct examination closed.

No cross examination.

Deposition closed.

Mr. Mahoney: Defendants' Exhibits 12 and 13 that were offered in evidence at the time the deposition of Frank A. Lang was taken are hereby offered in evidence here as Defendants' Exhibits 12 and 13.

The Court: What do these two exhibits show?

Mr. Mahoney: Why, the first Exhibit, No. 12, shows when the work was started on the Perry D. Green road.

The Court: When was that?

Mr. Mahoney: I haven't looked at them recently, but I think I could tel' –

The Court: When does it show that that job was completed?

Mr. Mahoney: The resolution for the carrying on of this work was adopted on the 23rd day of February, 1914.

The Court: When was the job completed?

Mr. Mahoney: On the 7th day of April the Board of Public Works,—the contract of construction was let to J. J. Quinn, contractor. Apparently it was accepted on this 7th day of April, 1914.

The Court: Well, that is the letting of the contract. Does that show when the city accepted the job?

Mr. Mahoney: Well, here is the estimate. The first estimate shows it was paid for during the month of May, 1914.

The Court: So some of the work was done before that date.

Mr. Mahoney: Yes, sir. And then here is an entry or notation from the record of the Board of Public Works, which is dated November 23, 1914, which states that the city engineer reports to the Board of Public Works the completion of this storm sewer No. 1, and submits final estimate.

The Court: Well, you would be entitled to the date of the first estimate.

Mr. Mahoney: Yes, first estimate.

WINN H. REEL, a witness called by defendants, being first duly sworn, testified as follows:

DIRECT EXAMINATION by Mr. Mahoney.

My name is Winn H. Reel. I reside at 17 N. Ninth Street, Vincennes, Indiana. I am forty-six years of age. I am a civil engineer. I have been county surveyor of Knox County from the year 1913 to the year 1918. The photograph Defendants' Exhibit 5 handed to me is a photograph of a machine I saw in operation on the Linneweber ditch east of Westphalia, Knox County, Indiana. It was Mr. Mahoney's machine. This blue print which has been handed to me shows the alignment of the Linneweber ditch. I made the location blue print for this Linneweber ditch map. I am the Winn Reel mentioned as engineer on this map dated March, 1914. The map shows a ditch called Gottlieb-Linneweber Ditch. This is the ditch I have previously referred to as the Linneweber Ditch. This was the ditch that I saw the Mahoney machine Defendants' Exhibit 5 excavating. The Mahoney machine finished this ditch. The machine operated satisfactorily in the digging of this Gottlieb-Linneweber Ditch. I don't believe that I can tell the exact date that I saw the Mahoney machine operating on this ditch, I think it was in 1915. The dipper on this Defendants' Exhibit 5 machine pulled the dirt toward the machine. This was the first machine I ever saw in which the dipper was pulled toward the machine in excavating. I do not recognize any of the persons shown on Defendants' Exhibit 5 unless the party marked "B" was Mr. Mahoney. I don't know who had the contract for the Gottlieb-Linneweber Ditch near Westphalia. I do not remember the nature of the soil on which this machine operated at this point.

Mr. Mahoney: The blue print which has just been identified by the witness as being a location map of the Linneweber Ditch, Knox County, Indiana, dated March, 1914, is hereby offered in evidence and the Notary is requested to mark the same "Defendants' Exhibit No. 14, Map of Linneweber Ditch, Knox County, Indiana, dated March, 1914."

Direct examination closed.

No cross examination.

Deposition closed.

Mr. Mahoney: The location map which was offered in evidence during the taking of the above deposition is hereby offered in evidence as Defendants' Exhibit No. 14, map of Linneweber Ditch, Knox County, Indiana, dated March, 1914.

Mr. Mahoney: We next offer the deposition of Robert E. Lind.

The Court: These two patents were in the Patent Office at the same time, weren't they?—Mahoney and Clutter?

Mr. Mahoney: Yes; one filed a day after the other.

Mr. Corbett: Well, I want to say, Your Honor, that the Mahoney patent was not cited against the Clutter application, however, although it issued before.

Mr. Richey: Neither was any interference declared between the two, which is the practice in the Patent Office when two patents are pending which claim the same invention.

Mr. Corbett: The point about that is that they must claim the same subject matter. Some question whether they were or not. Of course, there is always a possibility of a slip-up, and the law provides that in case there is no interference, it is possible to declare an interference between the issued patent and the pending application. In case one patent comes out, and one man wants to get an interference with that patent, he can do that. I don't want to confuse the issue, but just to make the matter clear.

The Court: I am glad to have those statements from counsel.

ROBERT E. LIND, a witness called by defendants, being first duly sworn, testified as follows:

DIRECT EXAMINATION by Mr. Mahoney.

My name is Robert E. Lind. I am forty-six years of age. I reside at 340 Broadway, Vincennes, Indiana. I am a civil engineer. I have held various county offices in Knox County, Indiana. I was county surveyor and engineer in 1911 and 1912; city engineer of Bicknell, Indiana, in the years 1920, 1921, 1922, 1923, 1924 and 1925. The machine shown in Defendants' Exhibit 5 I have seen, or one very similar to it, near Gorham, Illinois. I can't fix the exact date I saw this machine but to the best of my recollection it was some time in the early fall of 1912, or the spring of 1913. The machine I saw at Gorham, Illinois was represented to me as belonging to Daniel Mahoney. I don't know whether Daniel Mahoney accompanied me to Gorham or met me there but he was with me when we looked at the machine. Mr. August Bouvy accompanied me to see this machine at Gorham, Illinois. Mr. Bouvy is now dead. When we got to Gorham we found the machine at the site of a small drainage ditch, possibly one or two miles from Gorham. The machine was not in operation when we saw it at Gorham. From the machine's location it was my opinion that it had been in operation at that particular point. We examined the machine and the ditch. After we examined it I formed an express opinion that the machine was very suitable for excavating small ditches, and observed that the work which had previously been performed was very satisfactory.

CROSS EXAMINATION by Mr. Edgerton.

I did not at any time see the machine illustrated in Defendants' Exhibit No. 5 in operation. My conclusions as to the operability of the machine were partly based upon my opinion, and on the premise that the ditch shown to me at Gorham had been dug by this machine. I do not know of my own knowledge that the ditch adjacent to the machine at Gorham had been excavated by the machine. Mr. Daniel Mahoney explained the mode of operation of this machine to me.

Deposition closed.

(At this point the deposition session was adjourned until ten a.m. September 18, 1929.)

(Deposition session resumed pursuant to adjournment September 18, 1929.)

(Recess taken until two p. m. September 18, 1929.)

(After recess deposition session was resumed.)

WILLIAM F. STEIN, a witness called by defendants, being first duly sworn, testified as follows:

DIRECT EXAMINATION by Mr. Mahoney.

My name is William F. Stein. I am fifty-three years old. I reside at Westphalia, Indiana, Knox County. My occupation is that of farmer. The blue print which has been handed me is a blue print of a ditch in Westphalia that my neighbor and I contracted for re-cleaning and enlarging. The name of the ditch shown on the blue print is Gottlieb-Linneweber. Mr. Ed. Sillwault was the name of the other man that had the contract with me for this ditch. I think this contract was let August 1, 1916. It was either 1915 or 1916, we completed it in April the next spring. The ditch was contracted to be dug with teams. But we made such slow headway, we sublet to Uncle Dan Mahoney, or Daniel Mahoney along about September 15, that is the year the contract was let. Before Mahoney took over the sub-contract about eighty rods of the ditch had been dug by teams. In digging this ditch with teams the condition of the soil was so tough—gumbo. Mahoney dug the ditch by machine. The total length of this ditch which Mr. Sillwault contracted for was practically two miles with tile. The machine shown in Defendants' Exhibit 5 shows the machine before it was taken—dismantled, from the trucks, when we hooked the teams up to it and transported it from the railroad switch at Westphalia to the place where we proceeded to put skids under it, straddle the ditch and put it to work. The machine shown in Defendants' Exhibit 5 completed the ditch shown in the blue print Defendants' Exhibit No. 14. I actually saw the machine shown in Defendants' Exhibit 5 excavating the ditch of Exhibit No. 14. Referring to the photograph Defendants' Exhibit 5 the gentleman marked with the letter "B" looks to me to be Uncle Dan Mahoney. The gentleman with the derby is Walter Mahoney, his position is indicated by the letter "A". The dipper of this machine dug to the machine. It was the first machine I ever saw in which the dipper dug towards the machine. Walter Mahoney operated the machine

shown in Defendants' Exhibit 5 on the Linneweber ditch at Westphalia, Indiana. This machine performed good work, done its duty without kick and didn't have any trouble getting it received. The commissioner in charge made the remark that it did better work than we did with the teams. The machine operated very fast. Referring to Defendants' Exhibit 14 the ditch started on section line 29, the north line of Mr. Fred Armouth and the south line of Mr. Charles Neidringhaus. That is, it started on the north side of Armouth farm, that was on the east side of the ditch on Nora Hildebrand's—pardon me, let me explain—It ended near the Rock Road running east and west, being the section line between sections seventeen and twenty; and sixteen and twenty-one. I have taken a pen and traced on the map Defendants' Exhibit 14 the point where the Mahoney machine began the excavation of this ditch and have stopped where the Mahoney machine stopped or where it completed this ditch. After the machine shown in Defendants' Exhibit 5 completed the Linneweber ditch, it was left on my ground at the head of the ditch—well, for about two years, as near as I can tell. After that it was taken to Edwardsport, there the Indiana Light and Power Company used it and part of it to excavate some dirt for the plant. Referring to the Linneweber map Defendants' Exhibit 14 the point where the Mahoney machine stopped this ditch was a tile ditch from there on. That is, a ten inch tile that tapered to an eight. Before the Mahoney machine shown in Defendants' Exhibit 5 was used on the Linneweber ditch I saw it operate on South Main Street, Vincennes, Knox County, Indiana. At the time I saw it it was digging a trench for a sewer.

Mr. Mahoney: I hereby offer in evidence as "Defendants' Exhibit Number 15, a Certified Copy of certain portions of the records appearing on Order Books One and Two of the Record of Ditches and Levees of the Knox County Circuit Court, Indiana," and the Notary is requested to mark the same, "Defendants' Exhibit No. 15, Certified Copy of proceedings had with relation to the construction of the Linneweber ditch at Westphalia, Indiana."

Cross Examination by Mr. Edgerton.

(Narrative continued.) Referring to Defendants' Exhibit 14 the tile extension that is the portion of the drain beyond which the Mahoney machine was employed

averaged probably ten feet in depth. The ditch that the Mahoney machine dug had a four foot bottom two to one slope, from eight foot deep at the outlet, five foot at the head, probably twenty foot wide at the head and twenty-eight at the outlet. The tile ditch at the point where it emptied into the open ditch was three feet deep on the level. By "on the level" I mean this tile was laid in an old open ditch probably a foot and a half to two feet deep. This being with the level of the soil would run the tile probably three or three and a half feet. In my previous testimony when I stated that the Indiana Power and Light Co. used it and part of it to excavate some dirt, I meant that I saw the machine torn apart, some of the machinery was used, the boiler being an upright was standing on a frame, the hoisting engine was, and the boom, the swing apparatus was used and was at work without this boiler, this boiler being exposed to the outdoor atmosphere for practically two years hadn't been used made it become scaly and discarded. The rest of the machine was used at the time when I was at the plant. When I stated that the rest of the machine was used except the boiler I meant that the source of power was derived from a new boiler which replaced the old boiler. The Mahoney machine stood idle while the three and a half foot tile extension was cut for a period of two years after it had completed the excavation.

Cross examination closed.

Deposition closed.

DAVID H. BOND, a witness called by defendants, being first duly sworn, testified as follows:

DIRECT EXAMINATION by Mr. Mahoney.

My name is David H. Bond. I am sixty-five years old. I reside at 1658 Fairground Avenue, Vincennes, Indiana. My occupation is sewer contractor. I was superintendent of sewers of the City of Vincennes, Indiana, from 1913 to 1919. I was superintendent of sewers at Vincennes when Storm Sewer System No. 1 was installed. The contract for that work was held by Mr. Quinn and Thornberry—I don't remember whether that was Mr. J. B. Quinn. I think it was J. B. Quinn, I am not positive. This photograph Defendants' Exhibit 5 looks by the picture that it was on Broadway. May I reverse that answer, I am wrong there? Buntin Street, I

got the two streets mixed. That was Mr. Mahoney's machine in Exhibit 5, I don't remember his first name. I can positively identify Jack Lahay on that photograph Defendants' Exhibit 5. (Witness indicates party marked C.) The machine shown in Defendants' Exhibit 5 worked on Storm Sewer No. 1 in the City of Vincennes. I saw it digging trenches on this job. This Storm Sewer No. 1 was a large piece of work. The machine operated so as to dig toward the machine. To the best of my remembrance this machine in depth had taken out eight feet. As to how this machine worked I heard no complaint. I remember this machine dug quite a bit of the deep work on Buntin Street.

No cross examination.

Deposition closed.

(At this point the deposition session was adjourned until ten a. m. September 19, 1929.)

(Deposition session resumed at ten a. m. September 19, 1929.)

JOHN W. LENAHAN, a witness called by defendants, being first duly sworn, testified as follows:

DIRECT EXAMINATION by Mr. Mahoney.

My name is John W. Lenahan. I am usually called William Lenahan here in town. I am forty-six years of age. I reside at 902 Buntin Street, Vincennes. My occupation is contractor. I am a member of the firm of Lenahan and Konen. Defendants' Exhibit No. 2 on the right hand side the picture of this machine was taken on the Perry D. Green Road which was built by my father in 1911. In the photograph to the right on this exhibit I can identify the picture of myself and Mr. Mahoney. My picture is at the right rear wheel of the machine indicated by the letter "A" on the photograph. Mr. Mahoney is standing across the trench from the machine with a derby hat. Mr. Mahoney's first name shown in that photograph was Dan. I do not remember how long the machine shown in that photograph was used on that road by our company. Photograph Defendants' Exhibit 5 shows a design of a machine as I saw it in operation on the storm sewer in Main Street. This was Daniel H. Mahoney's machine formerly of Vincennes. On this photograph I recognize Dan Mahoney who is indicated

here with the letter "B" and his son Walter Mahoney, he's on the machine, indicated by the letter "A". The dipper on the machine shown in Defendants' Exhibit No. 5 dug to the machine.

No cross examination.

Deposition closed.

LYMAN H. BAREKMAN, a witness called by defendants, being first duly sworn, testified as follows:

DIRECT EXAMINATION by Mr. Mahoney.

My name is Lyman H. Barekman. I live in Vincennes Township, Route 7, Woodland, a subdivision of Vincennes, I don't live in the city. I will be seventy-eight years old the fifteenth of November. My occupation most of the time has been that of carpenter. Defendants' Exhibit 5 shows Dan Mahoney there. Well, yes, that there, to the best of my knowledge is his machine. I saw that machine operating down in southern Illinois. The name of the town was Gorham, Illinois. I was connected with the work on which this machine was operating at the time I saw it at Gorham, Illinois. I was working for William H. Vollmer. This machine was working on a small lateral ditch at Gorham. The ditch was started with teams and when the Mahoney machine was put on there to work I might say between one and two hundred feet had been dug. There wasn't very much of it dug. As to the width and depth of this ditch, it was kind of a curious ditch. Where it ran five feet deep it was three feet at the bottom and twenty-two feet at the top, and where it was shallower it did not need to be so wide. As to the reason we stopped work on this ditch with teams, well there was two or three reasons. Why it was gumbo and sticky. When we plowed through it the teams would go in it, and all ball up and you couldn't make any headway. I actually saw the machine shown in Defendants' Exhibit 5 digging a ditch at Gorham. I had charge of digging the ditch. I do not remember the exact year that I saw this machine operating at Gorham, but to the best of my recollection, it was about 1913, and it was along about the fall of the year, it must have been in October. I fix the date as in the year 1913 that I saw this machine operating in Gorham because of several things. I was in the hospital in 1913, and I think it was that fall I went down there. Then I

got a folder I got at East St. Louis that year. I have the folder with me and hereby produce it. This St. Louis and Southwestern time table, dated September, 1913, has been in my possession since I made my trip out there with the Mahoney machine at Gorham, Illinois. I had no other chance to get that. That was the only time I had ever been over the route. I had other records that related to this Gorham, Illinois, job but I have had them destroyed, I guess. I didn't think anything would ever come up. I destroyed my old papers last spring but I couldn't say about those records. That was before anybody said anything to me about this case. I made a search for these records but the St. Louis and Southwestern time table was all that I was able to find.

Q. Have you got any receipt, or anything, to show the year you were in the hospital.

Mr. Edgerton: Question objected to as leading.

A. I have a receipt from the Doctor when I paid him.

Q. What is the date of the receipt? A. If I remember right it was July, 1913.

Q. Have you got the receipt with you? A. No, I haven't it with me.

Q. Can you produce the receipt? A. Why I could if I was at home.

(Narrative continued.) I was at Gorham twice, the first time I don't just remember the date. I went before we had taken the ditcher down there, but I don't just remember how long may be two or three weeks. Mr. Mahoney and I brought the ditcher down there for Mr. Vollmer. This was Dan Mahoney. The instructions I received about getting the ditcher down there from Mr. Vollmer were that when I got to St. Louis I was to hunt the machine up and have them ship it at once, because it might lay there a week or two before it was shipped out. When I got to St. Louis I went to the freight depot —he told me he would have it shipped out after dinner; it was right noon then. The machine had been shipped from Vincennes to Gorham. I don't remember just exactly how long it was from the time the machine left St. Louis until it reached Gorham. It was a few days. I was at Gorham when the machine arrived there, and so was Dan Mahoney. When the machine arrived at Gorham it was unloaded and taken to where we were going to operate it. As soon as the machine was ready we put it

right to work. I don't just remember how long the machine was operating while I was at Gorham. I suppose —I'd say something like four weeks. By that time I'd say something like eight hundred or a thousand feet had been dug with this Mahoney machine. The machine did good work on this job. The reason I left Gorham is I didn't like the place, and I didn't think I was getting money enough to be aggravated with the crew I had. While I was there we had several men operating the machine, but I don't remember any of their names.

(Recess.)

Q. Mr. Barekman, during recess you made a trip to your home for the receipt for hospital expenses mentioned in your previous testimony, did you locate the receipt? A. Yes, sir.

Q. Will you kindly produce it?

Witness produces receipt.

(Narrative continued.) The machine shown in Defendants' Exhibit 5 dug to the machine. My best recollection of the time I quit my job at Gorham, Illinois, I just couldn't say, I know it was getting cold weather. It must have been some time along November, 1913. I never went back there after November, 1913.

Mr. Mahoney: The St. Louis & Southwestern Railway Co. time table or folder dated September, 1913, which the witness has produced is hereby offered in evidence as Defendants' Exhibit 16, and the Notary is requested to mark the same "Defendants' Exhibit 16. St. Louis & Southwestern Railway Co. time table dated September, 1913."

The receipt which the witness has produced for hospital expenses, dated July 24, 1913, is hereby offered in evidence as Defendants' Exhibit No. 17, and the Notary is requested to mark the same "Receipt for hospital expenses of L. Barekman, dated July 24, 1913, at Vincennes, Indiana, signed J. P. Ramsey, Defendants' Exhibit No. 17."

Mr. Edgerton: Exhibits 16 and 17 objected to as insufficiently proven.

It is stipulated by and between the counsel that in as much as the St. Louis and Southwestern Railway time table dated September, 1913, has quite a large number of pages therein, for the second deposition a photostat of the outside cover and the page containing time table num-

ber one, may be substituted for the original. The original time table, however, to be filed with the original deposition.

Direct examination closed.

No cross examination.

Deposition closed.

Mr. Mahoney: During the taking of the deposition of Daniel H. Mahoney, page 86, a request was made by counsel for plaintiff for the production of the original photographs from which Exhibits Four, Five, Six, and Nine were made and the orignal cut or leaflet of Exhibit Two. Counsel for Defendants hereby submit the originals from which said exhibits were made to counsel for plaintiff for inspection.

Ernest Vollmer, a witness called by defendants, being first duly sworn, testified as follows:

Direct Examination by Mr. Mahoney.

My name is Ernest H. Vollmer. I am fifty-seven years of age. I reside at 516 North Tenth Street, Vincennes, Ind. My occupation is with the North Side Building and Loan Association. I had a brother named William Vollmer who is now dead. My brother William Vollmer was interested in drainage contract work, in the State of Illinois. He was associated in this Illinois drainage work with Mr. Spiker, I think his name was Jacob. Mr. Spiker lived in the City of Vincennes. My brother was also a resident of Vincennes. The place where the drainage work was located that my brother was interested in was at Gorham, Illinois. I don't remember to whom the contract for this drainage work was let. I think though it was Mr. Joe Harding. One of the Hardings, Hugh Harding. Mr. Spiker is dead. I went down to Gorham, Ill. several times with relation to this drainage work. I was sent down there by brother Will. The first time I went down there was on the 7th day of June, 1913. I was sent down there to look after the ditch, the dredge boat ditch, hiring men. I took Lyman Barekman down there with me. He was taken down there to superintend the work down there on a lateral ditch. What we called the team ditch. The work on this ditch was started with teams. I don't remember how much work the teams did on this ditch, but they couldn't get along with the teams there so they quit the job. The way they

completed the ditch is that they got a ditcher down there to dig it out with. The machine was Dan Mahoney's machine of this city. The machine shown in Defendants' Exhibit 5 is the ditcher that was used at Gorham. Mr. Mahoney and Mr. Barekman went down with the machine from Vincennes. As to whether the machine shown in Defendants' Exhibit 5 completed the lateral ditch at Gorham, I couldn't say only they told me it finished it. I was never there after that. I took Mr. Barekman out there to take charge of this lateral ditch on the 30th day of September, 1913. I came back from there on the 2nd of October, 1913. I fix the dates that I have just given from my books where I have it down the time that I made the trips. I cannot tell you exactly to the day the date the machine shown in Defendants' Exhibit 5 was sent to Gorham. It might be the first or along about the second week in October, 1913. Barekman came back to Vincennes and was in Vincennes when the machine was shipped to Gorham. The reason he came back to Vincennes is that he could not do anything down there with the teams. Then the machine was sent out there. Barekman went with the machine. I do not know how long Barekman stayed there after he brought the machine back to Gorham, because I had nothing further to do with the matter after that time.

Cross Examination by Mr. Edgerton.

Q. You have testified that you went to Gorham on September 30, and returned on October 2, 1913, and that you made book entries of these dates, how recently have you referred to the book to which you refer? A. Well, it might be in the last three or four weeks.

Q. Is this an account book of the negotiations on this contract at Gorham? A. I don't understand the question.

Q. Did the book in which you made these entries pertain to the Gorham ditching contract? A. Not the ditching contract, no, sir.

Q. Well, any other matter relating to this ditching enterprise? A. Yes, sir, my time, that's the only thing.

Q. You still have that book in your possession? A. Yes, sir.

Cross examination closed.

Deposition closed.

(At this point the deposition session was adjourned subject to notice.)

Certificate of Notary omitted.

Mr. Mahoney: We offer in evidence depositions of L. B. Read, Frank J. Kapps, Frank A. Lang, Winn H. Reel, Robert E. Lind, William Stein, David H. Bond, John W. Lenahan, Lyman Barekman, Ernest Vollmer and Defendants' Exhibits 16 and 17 offered in evidence at time of the taking of said depositions.

DEPOSITIONS FOR THE DEFENDANTS

Taken at Murphysboro, Illinois.

NOTICE OF TAKING TESTIMONY.

Mr. Philip E. Siggers,
918 F Street, N. W.,
Washington, D. C.

Messrs. Richey & Watts,
1090 Union Trust Building,
Cleveland, Ohio.
Attorneys for Plaintiff:

Please take notice that the defendant herein will take the testimony of the following people:

Thomas G. Dunn,	Gorham, Illinois,
Joseph Moschenrose,	Gorham, Illinois,
William Bradshaw,	Gorham, Illinois,
Henry Stone,	Grand Tower, Illinois,
George Stone,	Gorham, Illinois,
George DeRemo,	Carbondale, Illinois,
Joseph Glenn,	Gorham, Illinois,
C. Crane,	Gorham, Illinois,

all of whom reside more than one hundred (100) miles from the place of trial herein, for use on behalf of the defendant at the final hearing of this cause, before Madoline Johnson, a notary public in and for the County of Jackson, Illinois, who is not of counsel nor interested in this cause, at the Court House, Murphysboro, Illinois, in the County Court Room on the second floor of the building on Thursday, the 17th day of October, 1929, at two o'clock p. m., and thereafter from day to day as the tak-

ing of the depositions may be adjourned; and such testimony will be so taken in accordance with the provisions of Sections 863, 864 and 865 of the Revised Statutes of the United States and the Federal Equity Rules.

You are invited to attend and cross examine.

EDWIN P. CORBETT,
Attorney for Defendant.

Dated October 14, 1929.

Service acknowledged October 15, 1929.

RICHEY & WATTS.

PRINTER'S NOTE:

A like Notice was issued on behalf of The General Excavator Company and was signed by Mr. Edward L. Reed.

The following depositions were taken on behalf of both defendants, pursuant to the above notice, at the Court House, Murphysboro, Illinois, in the County Court Room, before Madoline Johnson, a Notary Public, in and for the County of Jackson, Illinois, commencing at two o'clock P. M., Thursday, the 17th day of October, 1929. Counsel for all parties being present.

WILLIAM BRADSHAW, a witness called by defendants, being first duly sworn, testified as follows:

DIRECT EXAMINATION by Mr. Mahoney.

My name is William Bradshaw. I am thirty-eight years of age. I reside at Gorham, Illinois. I am a rural mail carrier. I have lived at Gorham, Illinois, since 1891.

The photograph, Defendants' Exhibit 5, I declare I thought this machine run on skids. It was an upright boiler that make of a drag line. That's what we call it, I don't know what other people call it. I seen a machine like that in the photograph, except that I thought that it run on skids instead of on wheels. Otherwise, it is the same machine in looks. I saw this machine in Brushy Arm near Gorham, Illinois. The machine was in operation when I saw it. The machine was doing what I call good work at the time I saw it. It was working smoothly. It was working on a ditch excavation. I can't recall the date exactly that I saw this machine operating near Gor-

ham, Illinois. I think it was about the year 1913. As to the direction the dipper dug on this machine, the best I can remember, it threw out and drawed the dirt to the machine. I believe that was the first shovel I ever saw that dug towards the machine.

The ditch on which this machine worked at Gorham ran along the Henry Arbeiter Farm, and I believe that other land was owned by Madden or Mayden. I would judge it to be about three quarters of a mile from the city limits of Gorham.

CROSS EXAMINATION by Mr. Edgerton.

Q. You have testified as having seen the Defendants' Exhibit 5 in operation. I now hand you a photograph, formerly introduced in this suit and identified as Defendants' Exhibit 4. Will you please state whether this photograph illustrates the machine you have previously referred to? A. The machine that worked there didn't have a top cab over engine and I believe it had skids under it, the best I can remember.

Q. Please compare the structure of the scoop and state which exhibit illustrates the machine, according to your recollections? A. Number five, because the best I can remember, the scoop pulled towards the machine in loading.

Q. Were you employed as one of the crew working on this machine? A. No, sir.

Cross examination closed.

Deposition closed.

JOSEPH MOSCHENROSE, a witness called by defendants, being first duly sworn, testified as follows:

DIRECT EXAMINATION by Mr. Mahoney.

My name is Joseph Moschenrose. I am fifty-two years old. I reside at Gorham, Illinois. I am a meat cutter at the present time. I was raised at Gorham, Illinois, I have been there fifty-two years. I saw the machine shown in the photograph Defendants' Exhibit 5 in operation at Gorham, Illinois. They was digging a ditch with it, drainage ditch, I guess you would call it. As to the location of this drainage ditch with reference to Gorham, it would be in the southeast part of Gorham, I believe, now let me get this right. It's in the south part of Gorham running west. This drainage ditch ran

through the Moschenrose and Arbeiter farms. I think that is as far as it reached. The Moschenrose farm I have mentioned was my father's. The drainage ditch near Gorham was dug either the latter part of 1912 or in 1913, if I remember right. As I remember it, it was in the winter when I saw it, along kind of cool weather. When I saw it operating a fellow by the name of George DeRemo was running it. The machine was started at the mouth of the other ditch, at the mouth of the old original ditch. When I seen it the ditch was being excavated by machine. I didn't see the first dipper full taken out. When I saw the machine operating the first time it was about a hundred feet from the main ditch which it emptied into. The machine when I saw it operating, the dipper was throwed out that way and dug to the machine. The machine in Defendants' Exhibit 5 finished the lateral ditch which I saw it operating on. At the time this lateral ditch was dug by the machine there was no road alongside of it. There is a road there now which was built about six years ago to my best remembrance or knowledge. The soil at the point where this ditch was excavated by the machine shown in Defendants' Exhibit 5, was black, sticky land, gumbo I call it. The machine was working nicely in this soil when I saw it.

No cross examination.

Deposition closed.

C. Crain, a witness called by defendants, being first duly sworn, testified as follows:

Direct Examination by Mr. Mahoney.

My name is C. Crain.

Mr. Mahoney: In the notice for taking these depositions, this man's name was given as C. C-r-a-n-e. Does Counsel for Plaintiff waive the misspelling of this name in the notice.

Mr. Edgerton: Yes.

(Narrative continued.) I am fifty-nine years of age. I reside at Gorham, Illinois. I am a lumber dealer. I have lived in Gorham, Illinois, since 1903. I saw a machine like that shown in the photograph Defendants' Exhibit 5 working on a ditch about a half mile due south from Gorham, Illinois. At the time I saw the machine it was digging this ditch near the Moschenrose farm. It

was operating when I saw it. I think the machine was Mahoney's. The year I saw this machine operating near Gorham was around 1912 or 1913. At that time I was engaged in the general merchandise business. I sold the men running this machine groceries. I haven't got any records to show this because these records all got destroyed in the cyclone. At the time I saw this machine operating near Gorham, Illinois, it was being operated by a fellow by the name of DeRemo. The soil at that point I would call gumbo. When I saw the machine operating I thought it was doing mighty nice work. The scoop or dipper on this machine dug towards the machine. That was the first machine I ever saw in which the scoop or dipper dug towards the machine. I think this machine finished the ditch at Gorham.

No cross examination.

Deposition closed.

(At this point the deposition session was adjourned until ten o'clock October 18, 1929.)

(Deposition session resumed October 18, 1929.)

Henry Stone, a witness called by defendants, being first duly sworn, testified as follows:

Direct Examination by Mr. Mahoney.

My name is Henry Stone. I am sixty years old. I reside at Grand Tower, Illinois. I am a farmer. I do not live in Grand Tower but live in Grand Tower Township, and have lived there for forty years. Where I live is three miles from Gorham, Illinois. I don't know whether I ever saw the machine shown in Defendants' Exhibit 5 or not, saw one something like it. The machine I saw was something like it, I don't know whether this is the machine or not. It was in a ditch running west on the Moschenrose place. It was about the line of the Moschenrose place and Henry Arbeiter place. The machine was operating when I saw it. I think the ditch it was operating on would be about a mile from Gorham. When I saw this machine operating near Gorham the dipper was pulled to the machine, that is it dug towards the machine. At one time I saw the machine operating, the man operating it was DeRemo. The first time I saw it operating I didn't know that man. The soil where this ditch was excavated was gumbo. As to the year I saw this machine operating the best I remember is, it was 1913. I

do not remember the time of the year. When I saw this machine on this job, it was operating all right, as well as any of them.

CROSS EXAMINATION by Mr. Edgerton.

Q. In your last answer you stated as well as any of them, were any other machines working on this ditch? A. No, sir.

Q. Had you observed the operation of other machines about that time, that is, in the excavation of ditches? A. No.

Q. Then why did you say this machine worked as good as any of them? A. I'll say this much that I'd saw other machines work.

Q. Do you mean that you saw other machines work in the years 1912, 1913, 1914? A. I don't remember.

Cross examination closed.

Deposition closed.

JOSEPH T. GLENN, a witness called by defendants, being first duly sworn, testified as follows:

DIRECT EXAMINATION by Mr. Mahoney.

My name is Joseph T. Glenn. I am sixty years old. I reside at Gorham, Illinois. I am a farmer. I have lived at Gorham, Illinois, since January, 1901. I have seen the machine shown in Defendants' Exhibit 5 just outside of Gorham—just outside the corporation on the Arbeiter farm. When I saw it the machine was cutting a ditch. It was just a little open ditch.—Mr. Mahoney owned this machine, claimed he was the inventor of it. I got fairly well acquainted with Mr. Mahoney. Mr. Mahoney's picture is shown in photograph Defendants' Exhibit 5, the person marked with the letter "B". My team hauled water for this machine for a short time while it was digging this ditch near Gorham, Illinois. As to the year this machine excavated this ditch, the best I can figure out, it was in 1913, that's the best I can figure, I haven't got nothing to refer to. I kept records at the time my team did the hauling for this machine but these records went off in the cyclone that occurred on March 18, 1925. My home was completely demolished in that cyclone. Everything I had was destroyed, I had nothing left only what I had on.

I saw Mr. Mahoney the old gentlemen operate this machine at Gorham, and there was another one or two, then his son, I believe his name was Walter, and George DeRemo, that's all I knowed that operated it. I remember why Walter stopped operating the machine. He got into a fight with a man up in a saloon, tried to cut him with a knife, the Marshal told him he better leave—get out of there. After that I don't just exactly know whether Paddy took it next or not. By Paddy I refer to George DeRemo. The soil where this machine excavated was gumbo. This is hard soil to work in. The Mahoney machine under these conditions cut the ditch—it done the work. The Mahoney machine finished this ditch near Gorham. The scoop on this Mahoney machine when I saw it operating near Gorham dug to the machine.

No cross examination.

Deposition closed.

GEORGE STONE, a witness called by defendants, being first duly sworn, testified as follows:

DIRECT EXAMINATION by Mr. Mahoney.

My name is George Stone. I am thirty-six years of age. I reside at Gorham, Illinois, and have lived there all my life. I am in the oil business, run a Standard Oil Filling Station. I am the son of Henry Stone that lives in Grand Tower Township. I have seen a machine like that shown in Defendants' Exhibit 5, the machine I worked on there looked like that machine. The machine I worked on was located south of Gorham near the Moschenrose farm, or was at that time I believe. When I worked on this machine they were digging a small ditch. I was just a helper around the machine. I worked on this machine at Gorham, Illinois, something like a week or ten days. I don't remember the exact days. The man running the machine was Paddy DeRemo, I believe it was. Tommy Bush and Ollie Smith worked on this machine at that time. Tommy Bush is dead, and Ollie Smith I haven't heard from him—I don't know where he is. George DeRemo is now at the State Farm near Carbondale. I mean the County Farm I believe it is. He had a spell of sickness of some kind that disabled him from his regular line of work. The dipper on the ma-

chine shown in Defendants' Exhibit 5 when I worked on it near Gorham dug to the machine. As to the date the machine excavated the ditch near Gorham, it was in 1913, might have been part of 1914, I don't know about that. I think it was in the latter part of the year 1913. The soil where this machine operated near Gorham was gumbo. The machine worked all right what time I was there.

No cross examination.

Deposition closed.

GEORGE DEREMO, a witness called by defendants, being first duly sworn, testified as follows:

DIRECT EXAMINATION by Mr. Mahoney.

My name is George DeRemo. I am forty-nine years old. I reside at the County Farm near Carbondale, Illinois. Before I became disabled I was working for the Iron Mountain. At that time I was living at Sand Ridge, Illinois. Before I became disabled my occupation was hoisting engineer and also painter and carpenter. I have had experience in operating excavating machinery, I have operated all the way from steam shovels to dredge boats, and from a dredge boat down to a lateral ditcher. The machine shown in Defendants' Exhibit 5 I saw at Gorham, Illinois, close to Leo Rock. I would judge Leo Rock is a mile or a little better from Gorham. I operated this machine and put it to work. I came there after they had unloaded it and brought it down. It was used on a lateral ditch. Dan Mahoney owned the machine. I became acquainted with Dan Mahoney after he came on the job. Dan Mahoney is shown in the photograph, Defendants' Exhibit 5, the person indicated by the letter "B". The farms which the ditch was located on that this machine excavated, Phillip Moschenrose farm was on the north side where we started, and if I ain't sadly mistaken the nearest I can remember Ardell Wells farm was on the other side. When we come to the end of the ditch we ran across some of the Arbeiter farm. We ran in this farm before we got to the end. The machine commenced on the end of the ditch, because there wasn't anything dug there, but with horses, they dug a little out with horses. The machine started to excavate near the mouth of the ditch where it emptied

into the main ditch. The soil at the place where the machine excavated this ditch was gumbo. Gumbo is a black soil, sticky and waxy. It is hard to excavate. I operated this machine on this ditch near Gorham and finished the ditch with the machine. Some of the men that worked with me on running this machine near Gorham were Tommy Bush and Dan Neace. Bush and Neace are both dead now. Bush craned for me. By that I mean he dumped the dirt out of the dipper when they swing out. This was done by a line. Dan Neace fired the boiler on the engine, and I operated the machine. The machine is operated with levers. One lever to load the dipper and another one to hoist the boom. To load the dipper, you pull in with a loading line run from the dipper back through the sheaves, and through the boom and back on the drum of the engine. The loading line is here. (Witness indicates the line marked "L" on Defendants' Exhibit 5.) Chain bar here on the dipper and there is a sheave in the middle of it, and one end of the line goes through the sheave and the other end anchors on the boom. After the dipper was loaded it was dumped with a tail line, that was anchored on the end of the boom and came down through a sheave on the back end of the dipper, then it ran up on the boom through another sheave "N" on the boom, then it run across to the mast pole through another sheave, then it run down to the niggerhead. The niggerhead is a spool on the end of the drum. The dipper on this machine dug towards the machine. You could dump your dirt on either side, it didn't make any difference. To swing the boom to unload they would swing one way just as easy as they could the other way. It didn't make any difference in the swinging. To operate the machine so as to swing the boom to the side to unload, you do it with a lever—with a friction lever. You could throw your lever one way and the boom would travel that way, throw your lever the other way and it would travel the other way. It's a friction feed. See, you throwed your lever over there and it would press against a friction on one drum, then you throw your lever the other way and it would press upon the other drum. The year the Mahoney machine shown in Defendants' Exhibit 5 excavated the ditch near Gorham, Illinois, to the best of my knowledge was 1913. The time of the year the machine was operating there was about the middle of August or

around the first of September, to the best of my recollection. It took me about three weeks' working time to finish that ditch near Gorham with the Mahoney machine. As near as I can recollect the name of the party who had the contract for excavating the ditch that the Mahoney machine dug was a man by the name of Spiker. Before the Mahoney machine was brought to Gorham, Illinois, I was working on the dredge boat that was used on the big ditches. When the Mahoney machine came to Gorham I was taken off the dredge boat and put to operating the Mahoney machine. The ditch that the Mahoney machine excavated at Gorham was somewhere around a half a mile. The ditch at the mouth at the top of the ground was nine feet wide. The ditch at the bottom near the mouth was five feet wide. The ditch was six foot deep at the mouth. At the head of the ditch at the top it was carried nine foot wide all the way through. It was also five feet wide at the bottom of the ditch at the head. The upper end or head of the ditch was four feet deep.

The Mahoney machine shown in Defendants' Exhibit 5 had cutter teeth on both sides of the dipper. The purpose of having these side teeth was for sloping the ditch, and banks, you know. I indicate the location of the cutters or side teeth on the photograph Defendants' Exhibit 5 with the letter "X". The purpose of the other member marked "X" at the rear of the dipper was another knife or lug or whatever you call it, for trimming banks. This Mahoney machine did good work on this ditching job near Gorham, Illinois. The size of the dipper that was used on this machine at Gorham, Illinois, was a half yard. As to speed of operation we could throw forty yards an hour with this machine. I do not know what became of the machine after I completed the ditch. I never saw it any more after I got done. Besides myself I know that Walter Mahoney came and operated the machine shown in Defendants' Exhibit 5 at Gorham, a little while, while I was gone. But I practically excavated all of the ditch with this machine.

Cross Examination by Mr. Edgerton.

The dredge boat that I referred to in my previous testimony, was located west of Sand Ridge, north of Gorham. It came right down between Sand Ridge and Gorham. It was not operating in a river, it was operated in the land, coming from the lakes on down and emptied

in the Big Muddy River. This was a county improvement project. It was formed into a drainage district. I was on the dredging boat and went immediately upon the Mahoney excavating machine. I couldn't give you the names of any of the fellows that worked on the dredge boat now. The reason why—they all go under different names. They all had nicknames, just like I got. After I completed the work on the Mahoney ditching machine I went back to this dredge boat. The length of time it took to finish the dredge boat enterprise I couldn't say because I was called off before I finished the job. I got a message to come and run an American Ditcher this side of Vincennes. I was on the dredge boat a week I guess when I got the message. I took the job of running the American Ditcher. I can't think who my employer was on this job—well the American Ditcher Co. I suppose, it's been so long. Then my memory is not as good as it used to be. I was on this American Ditcher job until we finished the work. I think it was two months after I got there—about two months. On this American Ditcher job I was shoveling back the loose dirt from the track, they dumped it there from cars. This American Ditcher job was located about fifteen miles, twenty miles I guess, this side of Vincennes. It was on this side of the river about fifteen miles through an oil field. There was a big oil field all through there, and they were putting in a railroad through there. I have never been there before or since. I was paid for the work by the company I was working for—I can't recall the name.

Cross examination closed.

Deposition closed.

THOMAS G. DUNN, a witness called by defendants, being first duly sworn, testified as follows:

DIRECT EXAMINATION by Mr. Mahoney.

My name is Thomas G. Dunn. I am forty-three years old. I reside at Gorham, Illinois, and have lived there since 1905. I have been a civil engineer for about twenty-one years. At the present time I am county superintendent of highways. I have seen the machine shown in Defendants' Exhibit No. 5 working close to Gorham. It was digging a ditch. It was a small ditch.

I guess it would average four feet in depth and about a six foot bottom. It was a drainage ditch. The name of the party that owned this machine was Mahoney. I saw this machine in actual operation on this ditch. The dipper of this machine dug towards the machine. The ditch that this Mahoney machine worked on was not an isolated ditching job, but it was part of a drainage system. The name of the drainage system of which this ditch was a part, was called Big Lake Special Drainage District. I have been the district engineer for this district since 1911.

Mr. Mahoney: I hereby offer in evidence a certified copy of the minutes of the Commissioners of Big Lake Special Drainage District, Jackson County, Illinois, and the Notary is requested to mark the same "Defendants' Exhibit 18, certified copy of minutes of the Commissioners of the Big Lake Special Drainage District, Jackson County, Illinois."

(Narrative continued.) Referring to Defendants' Exhibit 18 the map appended thereto shows the drainage system of the Big Lake Special Drainage District. I am the Thomas G. Dunn whose name appears on this map as district engineer. The map from which the photograph Defendants' Exhibit No. 18 was made was prepared under my supervision. The date on this map is August 30, 1910. In my previous testimony I stated I was district engineer for the Big Lake Special Drainage District since 1911. According to this map I must have been mistaken in my previous testimony, because the map shows that I have been district engineer for this Drainage District since August, 1910. The photograph shown in Defendants' Exhibit No. 18 has been greatly reduced in the photographic process from the size of the original map. On the original map each of the large squares represents one mile, that is one square mile. I can locate on this map Defendants' Exhibit 18 the ditch which the Mahoney machine shown in Defendants' Exhibit 5 excavated. The location of this ditch I have indicated by a line between two green crosses on the map. The name of the ditch which I have just marked which the Mahoney machine excavated is called "Extension of Tributary number Three of Eastern branch."

Referring to Defendants' Exhibit No. 18 particularly that paper dated October 22, 1913, shows that I in-

spected the ditch, and made an estimate due the contractor from the District, and certified the same for payment. The paper dated October 22, 1913, in Exhibit No. 18 referred to Extension of Tributary number Three of Eastern branch. This paper shows that on October 22, 1913, about forty-five percent of that ditch was completed on that date. The paper shows that thirteen stations were completed on this particular ditch. A station is about one hundred lineal feet. I have indicated on the photographic copy of the map appended to Defendants' Exhibit 18 with the letter "A" where station zero was located. Station zero which I have marked with the letter "A" is at a point where the lateral ditch emptied into the main ditch. The Mahoney machine began the excavation of this Extension of Tributary number Three of Eastern branch at station zero. I don't remember of any teams being used to start the ditch. The soil at the place where this ditch was excavated was very tight and sticky soil, what is commonly called gumbo. It is about the worst soil there is to excavate. The Mahoney machine handled it very well. The Mahoney machine completed the lateral ditch which I have marked on the photographic copy of the map, Defendants' Exhibit 18.

I remember the name of one of the men that operated the Mahoney machine on this particular ditch. His name was Pat DeRemo. I believe I remember the names of the commissioners who had charge of the Big Lake Special Drainage District when this work was being done, they were H. L. Brickey, Henry Arbeiter, Sr., and I believe my father was a commissioner at that time, Joel Dunn, I am not positive of that. I remember that in this ditch that the Mahoney machine excavated at Gorham there were in all twenty-seven stations. The Big Lake Special Drainage District was a large job. J. S. Spiker had the contract for this work referred to in Defendants' Exhibit No. 18.

The big ditches in this drainage system were excavated with dredge boats. Referring to the map in Defendants' Exhibit 18 it shows the names of farms along which the ditch ran that the Mahoney machine excavated. These were the Henry Arbeiter and F. B. Madden farms, it also touched the farm of P. J. Moschenrose.

It is stipulated that copies of the documents and certificates, included in Defendants' Exhibit No. 18, may be substituted for the certified copy in the record of one of the defendants herein and may be used with the same force and effect as the original certified copy could have been used.

It is noted that in the uncertified copy, above provided for, on the second page following the map, the date has been changed in ink to 1913 to agree with the original certified copy.

No cross examination.

Deposition closed.

(Certificate of Notary is omitted.)

Mr. Mahoney: We offer in evidence depositions of William Bradshaw, Joseph Moschenrose, C. Crain, Henry Stone, Joseph T. Glenn, George Stone, George DeRemo and Thomas G. Dunn.

Mr. Mahoney: Now, we have one more deposition about Mahoney, and that is by his attorney, that took out his patent.

The Court: His patent attorney?

Mr. Mahoney: Yes.

DEPOSITION FOR THE DEFENDANTS

Taken at Washington, D. C.

NOTICE OF TAKING TESTIMONY.

MR. PHILIP E. SIGGERS,
918 F Street, N. W.,
Washington, D. C.

MESSRS. RICHEY & WATTS,
1090 Union Trust Building,
Cleveland, Ohio.

Attorneys for Plaintiff:

Please take notice that the defendant herein will take the testimony of Eugene W. Johnson, of 9th & F Streets, N. W., Washington, D. C., who resides more than one hundred miles from the place of trial herein, for use on behalf of the defendant at the final hearing of this cause, before Paul J. Robertson, a Notary Public in and for the District of Columbia, who is not of Counsel nor inter-

ested in this cause, at the office of Paul J. Robertson, Union Trust Building, Washington, D. C., on the 22nd day of November, 1929, at ten o'clock, A. M., and thereafter from day to day as the taking of the deposition may be adjourned; and such testimony will be so taken in accordance with the provisions of Sections 863, 864 and 865 of the Revised Statutes of the United States and the Federal Equity Rules.

You are invited to attend and cross-examine.

EDWIN P. CORBETT,
Attorney for Defendant.

Dated at Columbus, Ohio, November 18, 1929.

Service of a copy of the above Notice is hereby acknowledged, this 19th day of November, 1929.

RICHEY & WATTS.

PRINTER'S NOTE:—

A like Notice was issued in behalf of The General Excavator Company and was signed by Mr. Edward L. Reed.

The following deposition was taken on behalf of both defendants, pursuant to the above notice, at the office of Paul J. Robertson, a notary public, Union Trust Building, Washington, D. C., commencing at ten o'clock a. m., Friday, November 22, 1929. Counsel for all parties being present.

EUGENE W. JOHNSON, a witness called by defendants, being first duly sworn, testified as follows:

DIRECT EXAMINATION by Mr. Mahoney.

My name is Eugene W. Johnson. I am seventy-three years of age. I reside at 2033 H Street, N. W., Washington, D. C. I am a patent attorney. I have been a patent attorney for over half a century. All of that time I have been engaged in the patent practice in Washington, D. C., except about four years when I had an office in Baltimore. For part of the above period I had entire charge of the patent practice of George E. Lemon and remained with him until his death, and I purchased

his patent practice and equipment for a nominal consideration from his executors. Mr. Lemon maintained an office in Washington, D. C., and I had charge of his patent practice in Washington.

I think I continued the business in Baltimore for about four years and accepted an offer made by Captain George E. Lemon to take charge of his patent practice and, except for my first experience with the firm of Chipman, Hosmer & Company and upon the dissolution of that company started in business for myself with an office and was associated with the firm of Hylum & Kane, maintaining an office with them and an office in Baltimore, where I then resided. At the present time I maintain my office in the Atlas Building, corner of Ninth and F Streets, in Washington, D. C.

I am the patent attorney Eugene W. Johnson whose name appears on the drawings of Daniel H. Mahoney patent 1,194,204, dated August 8, 1916. That is my signature as patent attorney on the drawings. I prepared and filed the application on which said Mahoney patent 1,194,204 was issued. I was Daniel H. Mahoney's attorney in this case from the time the application was filed until United States Letters Patent 1,194,204 was issued. I believe I personally prepared this application for patent. The paper which has just been handed to me is a file wrapper such as I used in applications for patent at that time. This file wrapper is obviously the one that was used in the Mahoney case which was submitted to him, January 17, 1913, and Serial Number 7348 corresponds with patent 1,194,204. This was the file wrapper that was used by me to contain papers relating to Mahoney patent 1,194,204 dated August 8, 1916. This is the original file in this particular case. The written entries appearing on the back of this file as well as on the interior of the left hand flap are in my own handwriting. These entries were made at different times. They were obviously made at the time of or contemporaneously with the events to which they relate. They were made by me in the regular course of business.

I found this file among papers of a similar nature which I stored in the basement of my home, 2033 H Street, Washington, D. C., when I gave up an office in the Warder Building and went to 918 F Street. At that period I stripped my files in patent cases of the major portion of their contents. To the best of my recollection, the Official letter of March 31, 1916, paper No. 10,

was the sole content of the file wrapper when I found the file in response to an inquiry by Mr. Hoffman. I did not make a search for other records relating to this Mahoney patent No. 1,194,204, because the file referred to would have contained all the correspondence which led up to the making of the file, except probably a small file in cases where fees were for a preliminary or initial examination. Referring to the back of this file wrapper of Mahoney patent 1,194,204 the notation "App'n submitted Jan. 17th, 1913" on the face of the file is obviously the date that the application was submitted to the applicant, either personally or by mail. I suppose the application was in complete form at that time. Referring to the face of the file the word "Tracings" after "Sketches" refers to a delineation made probably on tracing paper or tracing linen; and "Photo" in the same line indicates that the inventor submitted a photograph of some kind of his invention; and the word "Model" with "none" after it indicates that no model was submitted to me. The abbreviation of "received" after the word "Photo" indicates that the applicant inventor left a photograph with me. The tracings and the photograph which the file indicates that I received from the inventor in this case, were probably put in the file of waste papers and destroyed, the patent having been issued. These papers were destroyed at the time I stated that I moved my office. To my best recollection someone inquired about the Mahoney case, which was long after the files were stripped of their contents. That is somebody besides Mr. Hoffman. Mr. Hoffman's inquiry about the files in this case was made after the file had been stripped of its contents, long after that, and as previously stated these files of patented cases were stripped and removed to the basement of my residence long before any request was made upon me to search for this file.

On the inside of the file appears in pencil that I received five dollars on April the 14th, 1912, for a preliminary examination, indicated by the abbreviation "Pre. Ex."; that on April the 26th, 1912, I received $25 from Mr. Mahoney; and that on January 24th of the same year I received $25 indicated by abbreviation "Govt & Dwgs"; that on March 19th, 1915, there was a charge for drawings of $6.00. Further notations indicate that on April the 12th, 1916, I received $20.00 sent as final Government fee, but that such fee was applied as attorney's fee. This last $20.00 appears to me as appertaining to

another case of Mr. Mahoney's or for other services rendered in another matter in no wise relating to the case upon which patent 1,194,204 was issued. The pencil notation "Due $5.00 for assignment" may or may not have related to the patent issued August the 8th, 1916. The line under the date "March 19, 1915" indicates the above explanation to me. I do not know the reason why Mr. Mahoney delayed filing his application between the date I submitted the application to him on January 17, 1913, and the time the application was filed on September 10, 1915, except my impression was that he was financially embarrassed.

Referring to the first notation on the interior of the left hand flap reading "Recd. 5.00 Apr. 14, 1912-Pre Ex.", this indicates that I received $5.00 for making a preliminary examination of the invention. Consequently I must have had data from Mr. Mahoney which would disclose his invention to me. My name as witness to the official specification in application Serial No. 7348 indicates that Mr. Mahoney was at my office at the time the papers were prepared and executed. The file wrapper as it now appears is with the exception of the absence of papers and sketches which I said were taken out and destroyed in the same condition as it was at the time that I prosecuted said application for patent, to the best of my knowledge and belief, as all data written thereon is in my handwriting.

Mr. Mahoney: The original file wrapper and office letter previously identified by the witness as being the original file which contained his papers with reference to the Mahoney patent 1,194,204 during the filing and prosecution of this case to a patent and having thereon written and printed records of the witness relating to said patent 1,194,204, is hereby offered in evidence and the notary is requested to mark the same "Defendants' Exhibit No. 19. Attorney Eugene W. Johnson's original file wrapper and office letter of Mahoney application 7348 which issued as United States Letters Patent 1,194,204, August 8, 1916."

Mr. Reed: It is stipulated by counsel that the original file wrapper and office letter of Defendants' Exhibit No. 19 may be filed in the record of one of the above entitled causes and that photostat copies of the file wrapper and the office letter contained therein may be filed

in the record of the other of said cases and shall have the same force and effect as the originals would have had if filed in said other case.

CROSS EXAMINATION by Mr. Edgerton.

Q. Referring to Defendants' Exhibit No. 3, is the Eugene W. Johnson at the bottom of the drawing a copy of your autograph? A. Yes.

Q. And did you write the "D. H. Mahoney"? A. I did.

Q. Referring now to Defendants' Exhibit No. 19, the Daniel H. Mahoney file wrapper, did you write the name "Daniel H. Mahoney" on this? A. I did, as well as all the other writings on the file.

Q. Now compare the "M" in "Mahoney" in Exhibit No. 3 with the "M" in the line reading "Assignments Mahoney Railroad Ditching Machine Co." on Defendants' Exhibit No. 19, and also with the letter "M" in the same exhibit appearing on the second line after "Inventor." Are you in the habit of forming the character capital "M" in various manners? A. The different styles of penmanship depend a great deal on the character of pen points and pen holder which I used, often varying not only with the pen but the inclination of the desk from a flat top to an inclined top and though the formation of letters may be different, I would call attention to "ah" in "Mahoney" and "ah" in the same word after the printed word "Assignments."

Q. You are sure that some clerk or other individual in your office did not make some of the entries on this file wrapper? A. I am sure that all the entries were made by myself.

Q. Did you prosecute other applications for Mr. Daniel H. Mahoney? A. I did.

Q. Now, as a practical matter, this file wrapper would be made out or filled in during the early negotiations with your client, would it not? A. The writing approaching Spencerian was evidently written at a different time from the other portions of the file.

Q. And that date, January 17, 1913, appearing after "Application submitted," would be placed on the jacket before the serial number "7348," would it not? A. The serial number undoubtedly was placed on the file after the application was filed, because the serial number is furnished or taken from the official receipt of filing issued by the Patent Office.

Q. And the memorandum on the inside of the jacket which relates to the preliminary examination, fee, and so forth, would be placed in the file jacket before the serial number? A. The inside notations it has been my custom to make prior to entry on my cash book, which for that period is now non-existent.

Q. Then how do you know that the entry of April the 14th, 1912, and the entry of January 17th, 1913, relate to application serial number 7348? A. Because it has been my custom to keep files of each separate application distinct from others.

Q. Have you the file jackets in the other Daniel H. Mahoney cases you prosecuted?

Mr. Mahoney: Objected to as immaterial and irrelevant.

A. I have not looked up the matter of the other file jacket, of patent number 1,057,162, issued March the 25th, 1913; and I have no recollection of prosecuting for Mr. Mahoney other than the two cases.

(Narrative continued.) As to the nature of the information sent Mr. Mahoney with regard to the search of April 14, 1912, generally speaking, I would not have filed the case if my preliminary examination had not disclosed to me that the invention submitted contained patentable subject matter, and that the prospect for securing a patent was favorable. As to Mr. Mahoney's disclosure to me, the file appears to indicate on its face that the disclosure was in the nature of a tracing, drawing and a photograph. The photograph would have been received, very likely, in 1912, according to my records. When I sent the application to Mr. Mahoney on January 17, 1913, a copy of a drawing was probably submitted with the application as I have been accustomed to do in every case; and at that date the copy would have been a blue print taken from the drawings prepared prior to writing the specifications. From the witness' name I would say that the drawing was made by Clarence Walker or his brother J. T. Walker. I do not know whether J. T. Walker is living now, but the other Walker, the first witness, is now employed at the United States Navy Yard. I suppose he made the drawings from the tracing or photograph forwarded to me about April 14, 1912, as he did most of my drafting at that period, but the figures on the drawing I recognize as having been made by myself. I do not think I could recognize a photograph that

was submitted to me at that time unless it was marked in my handwriting. I cannot positively identify Defendants' Exhibit No. 4 as having been submitted to me. This photograph appears to be familiar. I have a faint recollection of asking Mr. Mahoney what was the meaning or purpose of a connection between the vehicle and the dredging machine and the answer was that it was a hose to supply water to the boiler. This I connect up with the statement made in the first column near the bottom of the type of engine and boiler used on the machine. I also have a faint recollection that one of the two figures of a man,—Mr. Mahoney stated that he was one of them, but this recollection is quite faint and I would not have thought of it except upon presentation of the exhibit above mentioned.

Q. Mr. Mahoney has testified that this is one of the first photographs made of this type of machine. Is it not probable that your draftsman and you too developed your patent application with a copy of this photograph before you?

Mr. Reed: The witness has stated that he can not definitely identify this photograph and has only a faint recollection thereof.

Further, to the best of counsel's recollection, the witness Mahoney did not state that this was one of the first photographs made of this type of machine, and the question is therefore objected to, as calling for speculation.

Mr. Mahoney: Mr. Reed's objection is concurred in by me.

A. This is highly probable, as the inventor was present when the case was prepared and there was a tracing which, with the photograph, would enable any draftsman to make the side view forming the drawings for the patent. Owing to the fact that the drawings do not show a link as shown on a member connected with the scoop, nor does the scoop show a bail in the drawings at the rear or closed end of the scoop, I would surmise that the tracing was followed rather than the photograph.

Q. When did you receive the tracing? A. The tracing or photograph or some equivalent disclosure must have been received about April the 14th, 1912, in accord with my file.

Q. To the best of your recollection, did this tracing illustrate the members 47 and 48 pivoted to the bucket

as illustrated in the Patent Office drawing? A. My recollection fails me as to this point.

Q. Did I understand you to state that Mr. Mahoney was with you when this application was signed in its final form? A. He must have been because I witnessed the specification and it was also witnessed by Mr. Blackwood. If it had been otherwise, the application would have been returned to Mr. Mahoney.

Q. Was the application signed here in Washington? A. I would say yes, on account of the witnesses to Mr. Mahoney's signature.

Q. Who is Mr. Blackwood? A. I believe Mr. Blackwood was a notary public.

Q. Does he live here or did he at the time of the execution of this application? A. The witness Blackwood evidently was in Washington at the time of the execution of the application.

Q. Do you remember whether or not you made any drawing corrections or changed your specification after you submitted the application to Mr. Mahoney on January the 17th, 1913? A. I do not believe that there were any changes made in the application prior to the execution.

Q. Was Mr. Mahoney in Washington when you submitted the application to him on January the 17th, 1913? A. He must have been, but I would refer to—(question read) I do not recollect of any changes having been made between the date it was submitted to Mr. Mahoney and the date of filing of the application, because the file indicates that in August and November, 1915, information was called for, the nature of which I do not now call to mind.

Q. I do not believe you have answered my question, XQ. 67 (XQ. 67 read by Notary). A. To the best of my knowledge and recollection he was.

Q. Referring now to the notation "Information written for Aug 26 1915 Nov 5 1915", do you recall the nature of the requests made at that time? A. It would appear to be that this was relating to the references cited by the Office during the prosecution of the case.

Q. You have testified that the drawings were prepared by your patent draftsman when you submitted the application to Mr. Mahoney on January the 17th, 1913; but on the inner fold of the file jacket you entered your charge for the same on March the 19th, 1915. Will you please explain the delay? A. The entry of March the

19th, 1915, was the sum received for the preparation of the drawings, as Mr. Mahoney had paid me fifty dollars and a preliminary examination fee, and Mr. Mahoney was in poor circumstances financially and I did not urge him for a balance until a later date. This reply is predicated upon my usual practice of receiving a certain amount in advance before taking up the preparation of a case; but it looks like in this case that the fifty dollars included the fifteen dollars as first Government fee.

Q. You have testified that it was your practice to segregate all the papers relating to each particular case and to maintain separate file wrappers for the same. You have also testified that the notation "received $20 sent as final fee" does not pertain to this case. Did you make an exception to your rule in handling Mahoney's applications? A. As to fees in the Mahoney case, I consider the Mahoney case an exception, as Mr. Mahoney probably came to me through another attorney, now secretary of the Society for the Prevention of Cruelty to Animals, who issued a circular with very close low fees. To the best of my recollection I have only had this case and another one heretofore mentioned from Mr. Mahoney. The notation "April 12th 1916 Recd $20.00 sent as final but applied as Attys" covered charges for several amendments in the case and it is followed by a remark "Due 5.00 for assignment". Whether I insisted on this or eventually applied it as final Government fee I do not recollect and at the present time have no way of ascertaining data relating to such entry.

Q. In your answer to Q. 35, you stated "This last $20 appears to me as appertaining to another case of Mr. Mahoney's or for other services rendered in another matter in no wise relating to the case upon which patent 1,194,204 was issued." Do you still maintain that answer? A. The answer was made to the best of my knowledge and recollection and it is not my usual practice to apply money in one case to another, nor do I recollect the particular services rendered. Why the entry was made I do not know.

Q. Do you still feel that this entry pertains to this case? A. I do.

Mr. Edgerton: Cross examination closed.

Mr. Mahoney: No re-direct examination.

Deposition closed.

(Certificate of Notary omitted.)

Mr. Mahoney: We offer in evidence the deposition of Eugene W. Johnson and Defendants' Exhibit 19 which was offered in evidence during the taking of said deposition.

Mr. Mahoney: Coming to the public use here in Toledo now, Your Honor, this is the case of the old Vulcan Iron Works here in Toledo that manufactured steam shovels.

The Court: This is the Vulcan that sold out to the Bucyrus?

Mr. Mahoney: Yes.

DEPOSITIONS FOR THE DEFENDANTS

Taken at Toledo, Ohio.

NOTICE OF TAKING TESTIMONY.

MR. PHILIP E. SIGGERS,
918 F Street, N. W.,
Washington, D. C.

MESSRS. RICHEY & WATTS,
1090 Union Trust Building,
Cleveland, Ohio.

Attorneys for Plaintiff:

Please take notice that the defendant herein will take the testimony of John B. Webber, who is approximately seventy years of age, and who resides at 6343 Edgewater Drive, Toledo, Ohio, and of Walter S. Culver, who is approximately sixty-five years of age, and who resides at 546 East Broadway, Toledo, Ohio, both of whom are ancient and infirm, for use on behalf of the defendant at the final hearing of this cause, before John C. Budd, a notary public in and for the County of Lucas, Ohio, who is not of counsel nor interested in this cause, at the office of said John C. Budd, room 503 Produce Exchange Building, Toledo, Ohio, on the 23rd day of January, 1930, at ten o'clock A. M. and thereafter from day to day as the taking of the depositions may be adjourned; and such testimony will be so taken in accordance with the provisions of Sections 863, 864 and 865 of the Re-

vised Statutes of the United States, and the Federal Equity Rules. You are invited to attend and cross-examine.

EDWIN P. CORBETT,
Attorney for Defendant.

Dated at Columbus, Ohio, this 18th day of January, 1930.

Service of a copy of the above notice is hereby acknowledged this 20th day of January, 1930.

RICHEY & WATTS,
Attorneys for Plaintiff.

PRINTER'S NOTE:

A like Notice was issued on behalf of The General Excavator Company and was signed by Mr. Edward L. Reed.

The following depositions were taken on behalf of both defendants, pursuant to the above notice, at the office of John C. Budd, a notary public, Room 503, Produce Exchange Building, Toledo, Ohio, commencing at ten o'clock a.m., Thursday, January 23, 1930. Counsel for all parties being present.

JOHN B. WEBBER, a witness called by defendants, being first duly sworn, testified as follows:

DIRECT EXAMINATION by Mr. Mahoney.

My name is John B. Webber. I live at 6343 Edgewater Drive, Toledo, Ohio. I am retired. I will be seventy years old the fifteenth day of this coming September. My occupation prior to retirement was general superintendent of the Vulcan Iron Works, Toledo, Ohio. I worked for the Vulcan Iron Works Company forty years. I began to work for them on the 13th day of June, 1873. The Vulcan Iron Works Company were engaged in general repair business and manufactured steam shovels and dredges. The Vulcan Iron Works is no longer in existence, they were sold to the Bucyrus Steam Shovel Company on the 1st of March, 1910. I was general superintendent of this company at the time of the sale. After the Vulcan Iron Works Company was sold to the Bucyrus people I stayed with them three

years after that, until about 1913. They moved their plant from Toledo, and I wouldn't go with them. I have operated steam shovels and was familiar with the operation of them for about thirty years. The Vulcan Iron Works Company were in business about three years before I went to work for them. My first position was as an apprentice. I was traveling engineer, that is, I operated machines for the company at various places where they had been sold to contractors. It was the custom to operate machines for contractors who had purchased them from ten to thirty days. I have operated machines for the Vulcan Iron Works Company, in Duluth, Pittsburgh, Chicago, St. Louis,—different places in the United States where machines were sold. The Vulcan Iron Works Company was a large manufacturer of steam shovels. At the time the company was sold in 1910 Alexander Backus was the president, he has since died.

The printed copy of United States Letters Patent 557,350, issued March 31, 1896, is one that was issued to me as the inventor. I assigned my rights in this invention to the Vulcan Iron Works Company.

Mr. Mahoney: The printed copy of United States Letters Patent 557,350, issued March 31, 1896, is hereby offered in evidence as Defendants' Exhibit No. 20, and the notary is requested to mark the same, "Printed copy of United States Letters Patent No. 557,350, issued March 31, 1896, to John B. Webber."

(Narrative continued.) The steam shovel shown in Webber patent 557,350 of March 31, 1896, was manufactured by the Vulcan Iron Works Company, about the fall of 1895. The drawing which has been handed me bearing date of May 13, 1895, shows a back action shovel manufactured by the Vulcan Iron Works and made in accordance with Webber patent 557,350 Defendants' Exhibit No. 20. The notation on the lower right hand corner of this drawing reads "Side elevation of back action excavator. Vulcan Iron Works Company, Toledo, Ohio, May 13, 1895, D. C. Walters." The D. C. Walters whose name is shown on this drawing is now dead.

Mr. Mahoney: The drawing just identified by the witness as a drawing of the back action excavator manufactured by The Vulcan Iron Works, Toledo, Ohio, in accordance with the Webber patent,

Defendants' Exhibit 20, is hereby offered in evidence as Defendants' Exhibit 21, and the notary is requested to mark the same, "Drawing of Vulcan Iron Works Company's 'back-action' excavator, dated May 13, 1895."

Mr. Edgerton: Defendants' Exhibit No. 21 is objected to as secondary evidence.

(Narrative continued.) The back action excavator shown in Defendants' Exhibits 20 and 21 were sold by the Vulcan Iron Works Company. The first back action shovel like that shown in Defendants' Exhibits 20 and 21 was sold to the T. A. Gillespie Company at Pittsburgh. They are now in New York. This company used this shovel at Allegheny, Pennsylvania. As to the date of sale of this shovel to the T. A. Gillespie Company, Mr. Gillespie came to Toledo and wanted to know if we could build a machine for him to do that work in Allegheny. It was in the fall of the year, and it was tested out in March, and it was taken to Allegheny, I think the first part of June, 1895. I know of my own knowledge that T. A. Gillespie used this machine as a back action shovel on the Allegheny job, because I operated the machine at that point for this company. My operation of the machine continued for ten days. After I left there the machine was operated by Walter Culver. This Allegheny job lasted two or three years. The excavation there was being made through clay and loose rock. It was a trench for water works. The Vulcan Iron Works back action machine finished that job at Allegheny for Gillespie. There were no other machines on that job. The ditch dug by this back action shovel at Allegheny was seven feet wide and twelve feet deep. The machine operated satisfactorily on this job. As to the length of that water works job at Allegheny, I have heard them say it was twelve to fifteen miles in length.

After this Allegheny job was finished the T. A. Gillespie Company used this machine on other jobs. Mr. Culver and Mr. Ike Pheatt ran this machine for Gillespie on these other jobs. I had some further connection with this machine after this Allegheny job. Mr. Gillespie bought a hundred thousand dollars worth of steam shovels, and asked us to take the back action shovel, and put a standard crane on it, and ship it on to the Messina Canal in New York. The Messina Canal was a canal for an electric light plant to take water out of the St.

Lawrence River and clay and rock were excavated there. I think the Messina Canal was excavated along about 1906 or 1907. It was at this time that we changed the Vulcan back action shovel to a forward digging shovel for Gillespie.

The reason the back action shovel was changed to a forward digging shovel on the Messina Canal job was so that it could do surface work. That is, excavate any objects above the level. In surface work the machine is down in a cut digging the side of a hill or bank of some kind. A back action shovel is primarily designed to dig below the surface. The Messina Canal job was surface work, but not all because it was partly done with dredges. The greater portion of the work, however, was for the type of shovel that dug forwardly. There were five machines of the type shown in Webber patent Defendants' Exhibit No. 20 manufactured and sold by the Vulcan Iron Works Company.

One of these machines went to St. Louis; one to Farley & Green of Chicago; one went to Pullman, Illinois; I don't remember where the other one went. As to the company that bought the shovel in St. Louis, they were brothers but I have forgotten the name. I operated the back action shovel shown in Defendants' Exhibits 20 and 21 at St. Louis. This was in 1898, at the time they had the cyclone. I was there when the cyclone occurred. They were making a sewer. I did not stay till the job was completed but only remained there ten days to demonstrate the shovel. After that period it was turned over to the contractor. They had their own runner. I operated the back action shovel at Chicago also, for Farley & Green. That shovel was also accepted by the contractor. The photograph just handed me shows a tractor shovel on wheels, shows a crane of the back action shovel. This photograph shows the back action shovel manufactured and sold by the Vulcan Iron Works about which I have been testifying. The photograph also shows that this machine was made in accordance with Webber patent 557,350 Defendants' Exhibit 20. This photograph is a true and correct representation of the Vulcan back action shovel that was sold by the Vulcan Iron Works to T. A. Gillespie and the one that was sold to the St. Louis contractor, and to Farley and Green of Chicago, and to the other concern at Pullman, Illinois, whose name I do not remember. My remembrance is that this photograph was taken at Allegheny. You

have called my attention to the name appearing on this machine which appears to be Farley & Green. It is possible that it is the one that was purchased by Farley & Green of Chicago. It is almost impossible to tell the machines apart except by their number. My recollection is that the photograph was taken at Allegheny. This is an original photograph which has been in my possession up until a few weeks ago.

Mr. Mahoney: The photograph which has just been identified by the witness as a true and correct representation of the back action shovel shown in Webber patent 557,350, Defendants' Exhibit 20, and manufactured by the Vulcan Iron Works Company at Toledo, Ohio, is hereby offered in evidence as Defendants' Exhibit No. 22, and the notary is requested to mark the same, "Photograph of the Vulcan back action shovel made in accordance with the Webber patent, No. 557,350."

(Narrative continued.) Page 97 of the Railway Review, issued September 7, 1895, which has been handed me shows in the large illustration in the center of the page a back action steam shovel. This photograph shows the back action shovel manufactured by the Vulcan Iron Works Company of Toledo, in accordance with Webber patent 557,350 Defendants' Exhibit 20. I have referred to the article on page 497 in connection with the illustration thereon which is entitled "A new steam shovel that will dig ditches" and from my knowledge of the machine manufactured by the Vulcan Iron Works Company I know that the description of the machine in this article is correct.

Mr. Mahoney: Page 497 of the Railway Review Dated Sept. 7, 1895, is hereby offered in evidence, as Defendants' Exhibit No. 23, and the notary is requested to mark the same, "Page 497 of the Railway Review, issued Sept. 7, 1895, bearing an illustration and description of the Vulcan back action shovel manufactured in accordance with the Webber patent No. 557,350."

(Narrative continued.) Referring to Defendants' Exhibit 20 the manner in which this Vulcan back action shovel operated may be described as follows. It takes two men to operate the shovel, an engineer and a cranesman. The engineer has control of the shovel, lowering, hoisting and swinging. The cranesman has control of

loading the dipper, lowering the dipper in the pit. The engineer swings over at right angles and dumps the load in a wagon or car. The engineer swings the shovel back to the center, and lowers the dipper. The cranesman that has control of lowering the dipper stick to the depth he wants and holds it and the engineer hoists it up, swinging it at right angles and dumping the load. You don't have to move this shovel out of the center of the cut to dig the trench wider. You can dig a trench ten feet wide from five to eighteen foot deep. In making a cut wider, in the center of the boom we have a spread there of about ten feet, which enables the cranesman to pull the hoisting pad lock from one side of the boom to the other. The cranesman has a 5 by 6 engine that controls the shipper shaft and a pad lock to dig either right or left to make it wider. In swinging the boom, to the right, he pulls the pad lock to the right and in pulling that pad lock there is a chain fastened to the shipper shaft and he pulls the shipper shaft to about 45 degrees, and that permits the shovel to dig away from the center to make it wider. The dipper stick is made V shaped in cross section, and that is lowered down by a spool and a chain handled by the cranesman with a foot belt brake. This shovel would dig anywhere from the width of the shovel to twenty feet from the center of the cut if you wanted it, or more. That would be ten feet on each side.

This shovel was not limited in digging to the width of the bucket without moving the machine. In addition to the engineer and cranesman we also had a fireman on this machine. The crane on this machine could be swung to either side of the ditch in unloading about twenty-five or thirty feet. The chain fastened on the dipper handle was fastened at the bottom, and at the top. It is also fastened to a spool, right and left, to raise and lower the dipper. When the engineer wished to lower the dipper, the cranesman holds the friction brake; the engineer lets go of the hoisting chain 62, and that lowers the dipper down, wherever the cranesman wants to dig. The dipper stick was manipulated to unloading position by the engineer who swung the bucket to the corner and it was dumped with a trip line by the cranesman. Defendants' Exhibit 22 shows the bucket in dumping position, it is open. This back acting shovel was capable of unloading the spoil to either side of the ditch into wagons or cars. I have unloaded it that way into wagons or cars.

The Court: Was this patent involved in the Cleveland case? (Referring to U. S. Letters Patent No. 557,350.)

Mr. Corbett: No.

Mr. Richey: We don't agree with that.

The Court: Your position is that it was?

Mr. Richey: There was a patent to Webber that shows this description. There may be a few bolts different, or something of that kind, made by the Marion Company.

Mr. Corbett: No, the Marion Company never made this shovel.

The Court: What is your position now, Mr. Corbett?

Mr. Corbett: Well now, Mr. Richey seems in some way to confuse the Webber machine or the Webber patent with some device made by the Marion Company. Now, there was no evidence in the Cleveland suit at all about this public use of this Webber device.

Mr. Richey: Well, let's settle it by going to the record. Your Honor, the record, pages 112 and 113 in the Byers case, and the Webber patent is shown in the record.

The Court: Well, what is shown at that point?

Mr. Richey: That is the testimony of Mr. Shaefer, of the Byers Company, about the use of this Marion machine.

Mr. Reed: It has no connection with the Marion machine whatever.

Mr. Richey: Here is the Webber patent; it shows the stationary boom out there, you see.

Mr. Mahoney: We will offer evidence about the machine later.

Mr. Richey: This is the dipper stick, that run up and down, and then in and out. Now, here is the same thing; perhaps this has a hood on.

Mr. Corbett: That is a different machine.

The Court: Well, you say the Webber machine was in the Cleveland case as the Marion machine?

Mr. Richey: Yes, and the testimony at pages 112 and 113 in the record, a man named Shaefer testified to that.

Mr. Corbett: That is not the same machine.

The Court: Well, of course I can't say it is. I just want your views, is all. I cannot resolve that now.

Then the correctness of his contention depends on whether or not the Marion machine and the Webber machine are identical or substantially the same?

Mr. Corbett: Yes, sir.

(Mr. Mahoney continues reading direct examination to close.)

(Narrative continued.) The Vulcan Iron Works manufactured in addition to these back action shovels, all types, from ten to one hundred and fifty tons. This back action shovel was designed so that it could be changed to a forward digging machine if required by replacing it with a standard crane. This Vulcan back action shovel was not a stock machine and the reason it was not a stock machine is because there was no demand for them. In other words we only manufactured this type of machine on special orders where the contractors had work of that kind that this machine would do.

In digging, this machine always stood on solid ground, and the dipper pulled toward the machine.

Cross Examination by Mr. Edgerton.

The machine that was sold to Gillespie was converted into a standard crane.

Q. And the job at Allegheny was the only trenching job done by this machine, is that correct? A. As far as my recollection goes. I don't know where the machine is now.

Q. To the best of your recollection or knowledge, it was not operated as a back action ditcher after the Allegheny job? A. I don't know.

Q. To change the crane required moving the machine to the shop or factory? A. No, sir; it is a standard machine. The booms are interchangeable.

Q. The machine that went to St. Louis, what is your recollection of the dimensions of the excavation made with that machine? A. 8 foot wide and 14 to 16 foot deep.

Q. And do you know anything about the work done by the machine that was sent to Chicago? A. Yes.

Q. Will you state, please, the type of excavating done there. A. That was loose rock and clay. That was at 142nd street.

Q. Was this surface work or ditching? A. Ditching,—sewer.

Q. Will you please state the dimensions of this ditch? A. That run from six to twelve feet. Six feet wide and 12 feet deep.

Q. How wide was the bucket in these various machines? A. About 36 and 38 and 40 inches.

Q. To the best of your knowledge, were any of these machines ever used to cut a ditch which was substantially the width of the bucket? By that, I mean a ditch in which the side cutting appliance was not employed? A. Yes.

Q. Was the bucket provided with side rake teeth? A. No.

Q. How far beyond the vertical position could the stick be extended outwardly? A. That depends upon the depth of the sewer. For instance, you want to dig down ten feet below that; whatever you dig you got to lengthen out your dipper stick.

Q. Could the bucket ever be extended forwardly of the center line drawn through the pivotal point? A. Yes.

Q. How? A. By the engineer giving them plenty slack of the hoisting chain.

Q. If I understand you correctly, it would only assume a position beyond the center line of the pivotal point when swung into that position. A. Swing back on an angle there of seven feet, beyond the center line of the dipper stick pivot.

Q. Could the engineer hold it in this position? A. No. The cranesman dropped the shovel and held it wherever he wanted it.

Q. Then if I understand you rightly, the engineer would swing the bucket but the cranesman would have to lock the stick in the outward position before taking a cutting stroke? A. You would have to get to the digging point before she would stop. The engineer would have to let go of his hoisting chain, and the cranesman dropped the bucket wherever he wants it.

Q. And the cranesman and engineer had to work together to accomplish this result? A. Always.

Q. Could the engineer and cranesman manipulate the bucket to effect a striking blow with the cutting teeth of the bucket? A. Yes.

Q. How? A. By holding them together. You can lower it down so you can put your finger under it, if you want to. Done by the lowering of the cranesman with the brake.

Q. What would be the length of the stroke or hoeing fall of the stick while delivering a striking blow? A. I don't get you at all. You mean striking the bottom?

Q. No. With the cutting teeth of the bucket? A. I don't get you.

Q. Didn't you say you could deliver a striking blow with the cutting teeth of the bucket? A. Yes, the cranesman can. By letting go of his brake. But if he did, he is apt to knock that dipper all out of line, break it up. The dipper is not made for a steam hammer or a pile driver.

Q. Then it was not your practice to do that? A. No, sir.

Q. And you never saw it done? A. I have seen it done, but not intentionally.

Q. Did any damage result? A. Yes. Broke the teeth and sprung a mouth piece.

Q. I presume you mean the bucket. A. No, the mouth piece is riveted onto the bucket, and the teeth are riveted onto the bucket and mouth piece.

Q. Did any other injury result? A. You are apt to knock out the teeth out of your racking, break your shipper shaft, and liable to break the crank shaft on the engine; those dippers, some of them, weigh as high as five ton. You drop five ton six or eight feet, it is liable to break any machine.

Q. You used the term "racking". What did you mean by this expression? A. That is where the engine and shipper shaft runs up and down on pinions connected to an engine on a different type of shovel. This handles with a chain.

Q. Apart from the racking, the other injuries enumerated however would follow in the machine, Exhibits 20, 21, 22, and 23? A. There is a general wear and tear to all machines.

Q. Was the boom in Exhibit 22 fixed as to height? A. Yes, sir.

Q. And is not pivotally mounted for swinging movement vertically? A. No, sir. It is stationary.

Q. In building up a deposit pile of spoil, at the edges of the trench, what would be the total height to which such pile of spoil could be built? A. We always used to load in wagons and make our back fill. You could dump up there ten feet; build ten feet high on the surface.

Q. But not any more than that? A. That depends upon the height of the boom. Ten feet is safe.

Q. That is, ten feet without reconstructing the boom height? A. It may do more, I don't know just exactly; it would be safe at ten feet.

Q. How long were the machines used which were sold in Chicago, Allegheny and St. Louis, and so forth? A. The Pittsburgh machine was in use, that is, the Allegheny, for eight years, up until I lost track of it.

(Narrative continued.) As to the other machines we sent repairs to them; that is all we know. As to whether any of these machines are in existence now I could not say, I have no record of them for twenty years. There were nine lines required to operate the machine. That includes the dumping line. The engineer manipulated three of these lines, and the cranesman operated the other six. These machines were capable of digging shale and loose rock.

Q. Do you mean by loose rock by being able to pick the rock as you would with a mattock and break it? A. No, not break it; loose rock. No shovel can dig solid rock.

Q. How about shale? A. It would dig shale.

Q. Did it? A. Yes, sure.

Q. Where? A. Dig shale up in Duluth; all different parts of the country we ran into shale rock. Loose rock, what is loose in the earth. Or loose rock that has been blasted.

Q. In other words, it would scoop up the loose rock? A. Yes, sir.

Q. But the scoop was not used for hoeing or breaking the rock up? A. It was not built for it.

RE-DIRECT EXAMINATION by Mr. Mahoney.

Q. In your answer to XQ. 155, you stated 9 lines were necessary to operate the machine. That included lines and cables for every purpose, is that correct? A. Yes, sir.

Q. How many lines were used in loading alone? A. There are not lines; they are chains. One line is a dump line. You use loading and digging on a corner; you use all chains. In fact, use all chains in digging the center. There would be three chains to operate the dipper when she is digging in the center. The others are stationary.

Q. Point out the three chains necessary for digging in the center. A. The hoisting chain and swinging

chain. The hoisting chain is 62 in the drawing. Also, the dipper stick chain.

Q. The dipper stick chain operates automatically without any action on the part of the engineer except to pull in on the hoisting chain, is that correct? A. The cranesman handles that chain, the dipper stick and the chain with the brake.

Q. But only to place the bucket in position for digging, is that correct? A. Yes, sir.

Q. When the bucket is in position for the cut, the hoisting chain is the only one which is needed to be operated to fill the bucket by pulling in thereon? Is that correct?

Mr. Edgerton: Objected to as leading.

A. No, sir. The radius of that bucket going down and dig all the earth out, it can't. The cranesman must regulate in digging with his brake in order to fill the dipper.

Q. After the cranesman has positioned his bucket for the proper cut, through manipulation of the brake, what line is then used for filling the bucket? A. The hoisting line.

Q. Then the crane is swung to one side and the bucket dumped by pulling on the dumping line? A. Yes, sir.

Q. In enumerating the lines to operate this machine which you have stated were nine for all purposes, did you consider the lines shown in the plan view on Fig. 2 of the patent, Defendants' Exhibit 20, to control the angle of the dipper handle as four lines? A. Yes, sir.

Q. The line on the swing circle was considered as one line? A. As two lines.

Q. And the other three lines were the hoisting line, the dump line and the line on the dipper handle? A. Yes, sir.

RE-CROSS EXAMINATION by Mr. Edgerton.

Referring to Defendants' Exhibit 21 the dipper stick was moved longitudinally with respect to the boom in lowering by the hoisting chain and the cranesman lets go of his brake, drops the dipper down. The engineer hoists the dipper and pushes the dipper stick back to where the cranesman wants to start to load the dipper. It is lowered by gravity, elevated by the hoisting line,

and positioned by the cranesman when he sets his brakes on the brake wheel.

Deposition closed.

(At this point the deposition session was adjourned until ten o'clock January 24, 1930.)

(The trial was here adjourned until Tuesday morning, March 10, 1931, at nine thirty a.m.)

(Tuesday, March 10, 1931, nine thirty a.m. trial was resumed, and Mr. Mahoney continued reading depositions of defendants.)

(Deposition session resumed January 24, 1930, at ten o'clock a.m.)

WALTER S. CULVER, a witness called by defendants, being first duly sworn, testified as follows:

DIRECT EXAMINATION by Mr. Mahoney.

My name is Walter S. Culver. I reside at 546 East Broadway, Toledo, Ohio. I am seventy years of age. My present occupation is electric repairman. I was at one time employed by the Vulcan Iron Works of Toledo, Ohio. I worked for this company about fifty years. In that period I have worked for other companies, but not permanently. Sometimes I was loaned out by the Vulcan Iron Works Company to operate shovels. The Vulcan Iron Works Company was formed before my time. This company was engaged in steam shovel and dredge repair and manufacture. That company is not in existence now. They sold out to the Bucyrus Steam Shovel and Dredge Company, a year or two before the war or two years. When I was employed by the Vulcan Iron Works Company, I was a steam shovel engineer most of the time, that is, I operated steam shovels and dredges. I started to operate steam shovels the year President Garfield was assassinated. I have operated various types of steam shovels, Bay City, Bucyrus and Vulcan. I operated these machines on regular contract jobs in different parts of the country.

I have seen a machine like that shown in the printed copy of United States Letters Patent 557,350, issued March 31, 1896, Defendants' Exhibit No. 20. I worked on this machine while they were building it at the Vulcan Iron Works. I am acquainted with John B. Webber the inventor of that machine. He was superintendent of

the Vulcan Iron Works when this machine was constructed. I operated the machine shown in Defendants' Exhibit 20. I first operated this machine in Allegheny, Pennsylvania, for the Allegheny Water Works. To operate this machine, this dipper is pulled from the center five feet each way. The arm goes back here at the same angle she is now. When they pull up that dipper it is back here, and when you get that all cleaned out from there, you are ready to move back then eight feet. Those engines pull that five feet out of the center, you hoist your dipper up with a load of dirt; it is pulled back to center, swung over and dumped. The dipper dug to the machine. The machine always stood on solid ground. This machine was known as a back action shovel. The manner in which the dipper was lowered to a position to fill is as follows. This chain 62 goes back here to a drum, the engineer cuts it loose with his lever, and the weight of it swings it where you want it, and you could check it and then start to hoist it. The fall of the dipper stick was checked by two chains fastened to the drum. The chain was fastened to the dipper stick at both ends and wound around the drum. The cranesman checked the fall of the dipper by two friction belts and a foot lever. The friction belt was around the wheels at the end of the boom. After the dipper was in position to cut, it was loaded by pulling it up through the bank by the hoisting chain. The cranesman with the check belt would hold it or ease it as required until it was filled. It was dumped with a dump lever or door cut loose. That is a rope or chain was used for dumping. This machine could unload to either side of the trench into wagons or cars. I have dumped it over the bank or throwed it over, and I have unloaded into wagons or cars on the jobs that I worked on.

I operated this back action excavator at Allegheny, Pennsylvania, for the T. A. Gillespie Company. This was a water works trench. On the average this trench was about eight feet and a half or nine feet wide. In depth it would average about ten feet. I think this water works trench at Allegheny was about nine miles long. I worked on this job at Allegheny with this back action shovel, nine months. I believe I would average twelve hours a day on this job. I don't remember the year I operated this back action shovel at Allegheny. It was about 1895 or 1896. There was no other machine on the job to dig trenches. This back action shovel finished the job at Allegheny.

The drawing Defendants' Exhibit No. 21 shows a machine manufactured by the Vulcan Iron Works Company which was operated by me for the T. A. Gillespie Company at Allegheny, Pennsylvania, around the years 1895 or 1896. The photograph Defendants' Exhibit No. 22 is a true and correct representation of the type of back action machine that was operated by me for the T. A. Gillespie Company at Allegheny. Page 497 of the Railway Review dated September 7, 1895, also shows the machine I operated for the T. A. Gillespie Company at Allegheny, Pennsylvania, in the years 1895 or 1896.

After I completed the Allegheny job for the T. A. Gillespie Company, I next operated this back action shovel for this company at Passiac, New Jersey. I operated this back action shovel at Passiac, New Jersey, about four months. This was a water works job. It was about eight feet wide and seven foot six inches deep on an average. This machine was operated as a back action shovel on this job.

The next place that I operated this machine for the T. A. Gillespie Company was at Ponton Plains, New Jersey. It was operated as a back action shovel on this job, which was a water works job. I operated the machine on this job for about five months. The trench on this job was about eight feet wide, and seven feet five inches deep.

The next place I operated this machine for the T. A. Gillespie Company was at Minneapolis, Minnesota. The machine was used as a back action shovel on this Minneapolis job. This job lasted about seven months. There was seven miles of trench which averaged about eleven feet deep and about the same width. This was a water works trench. After the Minneapolis job was completed I never operated this machine any more as a back action shovel. The machine was overhauled after this job and made into a front action shovel. When it was made into a front action shovel I operated it on the Messina Canal, Messina, New York. This machine could not be used as a back action shovel on this job because it was not the kind of work for it. This was a power canal and required front action shovels. This was a large excavation, with machines in the cut. It was a large canal. There were seven machines working on this job at one time. When the shovels cut the bank down to the water's edge, dredges started in at the St. Lawrence River and finished it.

I have operated back action shovels like that shown in Defendants' Exhibits 20 to 23 for other companies besides the T. A. Gillespie Company. These shovels were manufactured by the Vulcan Iron Works. One of these shovels I operated for Anderson Brothers at St. Louis. This was a storm sewer. I worked for this company four months at St. Louis. I did not complete the job there. After I left the shovel was ran by one of the contractor's own men. I operated this shovel for Anderson Brothers at St. Louis about three years after I finished the Gillespie job about 1899 or 1900. This job at St. Louis was nineteen feet deep and twelve feet wide. This machine was operated as a back action shovel on this job.

Cross Examination by Mr. Edgerton.

I know that the Vulcan Iron Works Company built three machines like Defendants' Exhibit 20. I don't know whether Anderson Brothers ever converted their machine into a forward digging machine. As to the third machine mentioned by me, I do not know whether it was ever converted into a front action digging machine. I do not know where these machines are now. You could build a spoil pile adjacent the edges of the ditch according to the depth.

Q. Referring to Defendants' Exhibit 21, I call your attention to the dimension eight feet and 9 inches from the grade line to a point at the bottom of the boom. Would it be possible to build a pile of spoil higher than this dimension? A. Not without they would level it off.

Q. Is it not true that the end of the boom would brush off the top of the pile if the spoil were deposited to a height exceeding 8 feet, 9 inches? A. No.

Q. Does not the end of the boom swing out over the spoil when the boom is moved to a dumping position? A. Yes, sir.

Q. Now, do you still feel that the end of the boom would not sweep over the top of the spoil in a pile and limit the height to 8 feet, nine inches? A. Natural slope to that both ways, the pile of dirt; that would be about two and one.

Q. I am referring only to the height of the pile from the ground line to the end of the boom. A. It would dump about nine feet in the clear.

Q. The vertical height of the boom was fixed, was it not? A. Probably was, but I couldn't say what it was.

Q. You mean you don't know what the height was? A. Yes, that is it, you got it now.

Q. Was it possible to vary the height from the ground to the end of the boom? A. Could it be moved up and down? No, it is stationary.

Q. Did you ever dig a ditch which was no wider than the width of the bucket? A. No, sir.

Q. In operating the scoop, the cranesman and engineer would have to work in unison to position the bucket, would they not? A. Yes, sir.

Deposition closed.

(Certificate of Notary omitted.)

Mr. Mahoney: We offer in evidence the depositions of John B. Webber and Walter S. Culver, as well as Defendants' Exhibits 20, 21, 22 and 23 offered in evidence during the taking of said depositions.

DEPOSITION FOR THE DEFENDANTS

Taken at Marion, Ohio.

NOTICE OF TAKING TESTIMONY.

Mr. Philip E. Siggers,
918 F Street, N. W.,
Washington, D. C.

Messrs. Richey & Watts,
1090 Union Trust Building,
Cleveland, Ohio.

Attorneys for Plaintiff:

Please take notice that the defendant herein will take the testimony of William Mitchell, who is sixty-six years of age, and who resides at 244 Madison Avenue, Marion, Ohio, and who is ancient and infirm, for use on behalf of the defendant at the final hearing of this cause, before Henry A. Mickley, a Notary Public in and for the County of Marion, Ohio, who is not of counsel nor interested in this cause, at Room 201, 133 East Center Street, Marion, Ohio, on the 21st day of May, 1930, at seven-thirty o'clock P. M., and thereafter from day to day as the taking of the deposition may be adjourned; and such testimony will be so taken in accordance with the provisions

of Sections 863, 864 and 865 of the Revised Statutes of the United States, and the Federal Equity Rules.

You are invited to attend and cross-examine.

EDWIN P. CORBETT,
Attorney for Defendant.

Dated at Columbus, Ohio, this 17th day of May, 1930.

Service of a copy of the foregoing notice is hereby acknowledged this 19th day of May, 1930.

RICHEY & WATTS,
Attorneys for Plaintiff.

PRINTER'S NOTE:

A like Notice was issued on behalf of The General Excavator Company and was signed by Mr. Edward L. Reed.

The following deposition was taken on behalf of both defendants, pursuant to the above notice, at the office of Henry A. Mickley, a notary public, Room 201, 133 East Center Street, Marion, Ohio, commencing at seven-thirty o'clock p.m., May 21, 1930. Counsel for all parties being present.

WILLIAM MITCHELL, a witness called by defendants, being first duly sworn, testified as follows:

DIRECT EXAMINATION by Mr. Mahoney.

My name is William Mitchell. I reside at 244 Madison Avenue, Marion, Ohio. I am sixty-six years old. At the present time my occupation is running a dredge boat for the Marion Sand and Gravel Company. I am the operator of the dredge. I have had experience with the operation of steam shovels, dredges and other excavating machinery better than twenty-five years. That is, I have operated machines for twenty-five years for excavating and dredging. In that time, I have operated drag lines, and dipper dredges, and a dipper shovel, and a clam shell. They were caterpillars and mounted on wagons, and dredges that float. I operated the drag line in southeast Missouri, and the floaters most every place in the United States. I worked pretty well over twenty-

eight states. I was employed by the Fairbanks Steam Shovel Company at Marion, Ohio, for twenty-five years. I began employment there around 1900, and worked for them up until the year 1925 or somewhere around there. While I was employed by the Fairbanks Steam Shovel Company, I was outside man on repair work until he started building shovels. I worked about three years before he commenced, then I was erecting them on the job wherever they were sold. My duties required me to stay with the machine and demonstrate it for ten days, unless it was a special job. In that ten day period I had to operate the shovel on the job. The acceptance of the machine was dependent upon the manner in which the machine operated in that ten day period, and the machine was sold with the understanding they would do so much work in the ten days, and a man had to do it to get the settlement. If the machine met the conditions of the contract at the end of ten days the purchaser was required to accept the machine, unless it was a special machine.

The printed copy of United States Letters Patent 1,056,268, dated March 18, 1913, is like a machine I saw built with the exception of one or two places, that is different than what it shows on that print. I saw this machine in the yards of the Fairbanks shop at Marion, Ohio. These machines were built by the Fairbanks Steam Shovel Co. I had charge of setting them up in the yard. I have seen two machines like that shown in the drawing. The purpose of erecting them in the yard was to be sure to have them right before they went out on the job. They were tested in construction and operation before they were shipped to the purchaser. These machines that I tested run all right, what we could try them here in the yard. One of these machines was shipped to Minnesota, and one to San Benito, Texas. I can't give the man's name off-hand to whom the Minnesota machine was sold and shipped. The machine that was sold and shipped to Texas was for the San Benito Land and Water Company.

Mr. Mahoney: The printed copy of United States Letters Patent 1,056,268, dated March 18, 1913, and issued to James G. Fairbanks, is hereby offered in evidence, and the Notary is requested to mark the same "Defendant's Exhibit No. 29, printed copy of United States Letters Patent 1,056,268, dated March 18, 1913."

(Narrative continued.) After I tested these machines, and they were shipped from the factory at Marion, I had to go and set them up and run them the time that is required by the contract. I demonstrated the machine like that shown in Defendants' Exhibit 29 that was sent to Texas. I did not demonstrate the machine that was sent to Minnesota. I can not recall the name of the demonstrator that was sent to Minnesota with the machine. The Marion Steam Shovel Catalog to which I have been referred copyrighted in 1912, shows on page 46 thereof the machine that was shipped to Texas, with the exception of this little cab here.

Mr. Richey: That patent was in the Cleveland case, Your Honor.

Mr. Corbett: Your Honor, I understand in connection with that that the structure which was used differed somewhat from the structure of the patent in the Cleveland case, and that is the purpose of this deposition, to show the difference in the operation of those devices.

Mr. Richey: Well, Mr. Sauer testified about this.

Mr. Corbett: Yes, but Sauer didn't know anything about the actual operation.

Mr. Richey: I think, Your Honor, when you get to it it is a matter of cumulation, is all.

(Mr. Mahoney continues reading the deposition.)

(Narrative continued.) The illustration on page 46 shows the type of machine that was built in accordance with Fairbanks patent 1,056,268 except that it shows a little something below there underneath the machine. It is the same with the exception of some minor changes. The machine shown in the illustration is the one which was built by the Fairbanks Steam Shovel Company and tested out by me in their yard and later shipped to Minnesota. The other machine that was shipped to Texas was like the machine shown in illustration on page 46 of the Fairbanks catalog.

Q. I now hand you a blue print bearing the number 315 in the lower right hand corner, and ask you what it shows if you know? A. It shows the machine just as she was built.

Q. That is the machine shown in Defendants' Exhibit No. 29, and the Fairbanks Catalog of 1912, page 46, is that correct? A. Yes, sir.

Mr. Mahoney: The Fairbanks Steam Shovel Company Catalog copyrighted 1912, and bearing the

illustration of the machine shown in Defendant's Exhibit No. 30, on page 46 thereof is hereby offered in evidence, and the notary is requested to mark the same "Defendant's Exhibit No. 30. The Fairbanks Steam Shovel Catalog copyrighted in the year 1912." The blue print of The Fairbanks Steam Shovel Company No. 315, just identfied by the witness as showing the machine built in accordance with the Fairbanks patent 1,056,268 is hereby offered in evidence, and the Notary is requested to mark the same, "Defendant's Exhibit No. 31, Blue Print No. 315, of Fairbanks Steam Shovel Company's back action shovel."

Mr. Edgerton: Defendant's Exhibit 30, is objected to as insufficiently proven. Defendants' Exhibit 31, is doubly objected to, First: because it is insufficiently proven, and, Second: As secondary evidence.

(Narrative continued.) Referring to Defendants' Exhibit No. 30, particularly the illustration on page 46, and comparing it with the machine illustrated in the drawing Defendants' Exhibit 29, the differences I note so far as the boom and scoop mechanism is concerned, this seventeen is located different here in the building than it shows there on the plan, and thirteen doesn't show this sheave as plain as it does here. That eleven is for the boom that is hitched further down on the boom than what he shows there. (Indicating the patent.) The movable boom is hinged different in the machine that was built than it is in the patent drawing. With the changes I have pointed out, the machine shown in the illustration on page 46 of the catalog is the same as that shown in the patent drawing Defendants' Exhibit No. 29. These changes constituted principally the modification of the dipper cradle. Referring to Defendants' Exhibit 29, Defendants' Exhibit No. 30, page 46, and Defendants' Exhibit No. 31, in operating the machine you simply drop your dipper number 14 down in front, and draw in your hoist line 22 for to fill; when you swing around to dump then you change to 23 to dump; that is all there is to getting the bucket loaded and unloaded. In digging, the bucket is moved to the machine. The machine always remained on solid ground and dug to itself. The Figure 7 on the drawing of Defendants' Exhibit 29, would be the stationary boom. The numeral 11 indicates the lower boom which raises and lowers.

The numeral 16 on Figure 1 of Defendants' Exhibit 29 indicates the false bottom, which might also be called the gate. The gate 16 operates in this way. When you pulled to fill your bucket it shoves to the back of the dipper bucket, and when you dump that forces the dirt out of the bucket and pulls to the front. The purpose of chains 17 and 18 is to pull the bottom when it is fetching the dirt out, and when your bucket is empty you could pull on line 23 and raise your boom and dipper right on up. 17 holds it at a certain place and you can raise it right on up.

These back action shovels which were built and shipped to Minnesota and Texas were gasoline machines, with Fairbanks-Morse engines. I erected and demonstrated the machine shown in Defendants' Exhibit 30, page 46, which I testified was shipped to Texas, in the year 1910. This machine was used at San Benito, Texas, for digging an irrigating canal. I operated this machine at San Benito, Texas, for six weeks. The contract required me to excavate seven hundred yards a day. I couldn't say whether the machine met this requirement, that is, how much it measured up, but we got settlement for the machine. The machine satisfied the purchaser and was accepted. As to the depth of this irrigating canal at San Benito, Texas, they were digging so as to try to carry three feet of water above the surface, they were digging the center out and building a levee on each side so as to carry three feet of water above the surface. On the average, this irrigating canal ran pretty close to four feet below the surface of the ground. This irrigating canal was about eleven feet wide at the surface, and was about seven feet deep on a line from the top of one dirt pile to the other and thence to the bottom of the canal. The canal was about twenty-six feet wide measured from the top of one dirt pile to the other. To operate this machine, it required two men. Only one man was required to operate the controls of this machine. The other man was a roustabout about the machine and had nothing to do with the controls. In other words, it only took one man to operate the machine for digging and unloading, that is operating the controls.

Q. Does Blue Print No. 315, Defendants' Exhibit No. 31, show any feature that was not actually used on the machine shown in Defendants' Exhibit 30, page 46?

Mr. Edgerton: Objected to as leading.

A. No.

Q. Referring to Defendants' Exhibit No. 31, was the part which I am marking with the letter "A" actually on the machines which were built and shipped to Texas and Minnesota?

Mr. Edgerton: Same objection.

A. No. It wasn't.

Q. In all other respects however the blue print, Defendants' Exhibit No. 31, shows the exact structures of the machines which were built and shipped to Texas and Minnesota, is that correct? A. Yes, sir.

The Court: What is that, the stop?

Mr. Mahoney: The A is a brake, and it was testified in the previous suit that was on that machine, and this man testified it was not.

(Mr. Mahoney continues reading deposition.)

Referring to Defendants' Exhibits 30 and 31 the power plant or bed of the machine was used for other types of shovels, such as front action shovels and other types manufactured by the Fairbanks Steam Shovel Company, and was not designed specifically for this back action shovel alone. The boom mechanism could be changed to a front action if desired. In the year 1910 the Fairbanks Steam Shovel Company chiefly manufactured and sold those machines and floating dredge boats. Floating dredge boats were the main bulk of their business. In the year 1910 they didn't have any demand to speak of for back action shovels like those shown in Defendants' Exhibit 31. Those two were all they sold. Dredging and irrigating work at that time was chiefly done with floaters. By floaters I mean floating dredges. The machine shown in Defendants' Exhibits 30 and 31 could dig a trench about eighteen feet wide. You could dump into a truck just as well as you could any other one. The machine was capable of excavating a trench the width of the bucket only. If you were digging a trench the width of the bucket only you would provide for side clearance by putting a blade or tooth on the side, just the same as all of them do. In the operation of the machine shown in Defendants' Exhibit 30, the machine was moved on its caterpillars just when you wanted to move it up. Friction clutches were used on this machine.

Q. I now hand you what purports to be a Fairbanks Steam Shovel Company Shop Order No. 185, bearing

date of January 27th, 1910, and ask you to inspect this shop order and state if you know what this order referred to? A. That is the order for the machine that went to Texas.

Mr. Mahoney: The shop order No. 185, dated January 27th, 1910, which has just been identified by the witness, as the shop order for the machine shipped to The Rio Grande Construction Company, at San Benito, Texas, is hereby offered in evidence, and the Notary is requested to mark the same, "Defendants' Exhibit No. 32, Fairbanks Steam Shovel Company Shop Order No. 185, dated January 27, 1910."

Mr. Edgerton: The exhibit is objected to as being insufficiently proven, and moreover as it does not identify the machine the witness has been testifying about.

Q. How are you able to tell from Shop Order No. 185, Defendants' Exhibit No. 32, that it was the machine shown in Defendants' Exhibits Nos. 30 and 31? A. I get that from the material shipped, one special 1½ dry land excavator. Oil engine power, 50 H. P. single cylinder type, Boom 40 ft. Machinery to be mounted on endless webb tracks and self-propelling. Oil engine electric plant, F. M. & Co. type with generator filled rheostat, voltmeter, six large and twelve small lamps. Wrenches, oil can, and tools necessary in operation of machine.

Q. And from your familiarity with the business of this concern, and from the description of the material shown on this shop order as well as the name used to designate the machine, you know that this shop order related to the machine which you actually shipped and later demonstrated in Texas? A. Yes, sir.

Q. In your answer to Question 31, you stated that the machine was sold to the San Benito Land and Water Company, whereas the order shows the machine was to be shipped to the Rio Grande Construction Company, can you explain this discrepancy in the names? A. The Rio Grande Construction Company, the San Benito Land and Water Company, The Hidalgo Construction Co., The San Benito Telephone Company, they were all one company, the same men but they had several different companies in one outfit.

Q. But the contract for the sale of the machine was made to the Rio Grande Construction Company as shown on the order, is that right? A. Yes, sir.

Q. I now hand you what purports to be original shop order No. 188, dated March 9th, 1910, of The Fairbanks Steam Shovel Company, and ask you if you know what this shop order relates to? A. That was a one yard machine, that is for the Minnesota machine.

Q. This order then relates to the machine shown in Defendants' Exhibits Nos. 30 and 31, which was tested by you in the yard and later shipped to Minnesota? A. Yes, sir.

Q. To whom does the order show the machine was to be shipped to? A. George A. Castle.

Q. Does the order show the location? A. The county of Polk, Minnesota.

Q. Referring to Defendants' Exhibit No. 30, page 46, to whom does the catalog state that the machine shown in that illustration was owned by? A. George A. Castle, Crookston, Minnesota.

Q. What does the order state as to how the machine is to be constructed?

Mr. Edgerton: Question objected to as the order will speak for itself.

A. One yard dry land machine with one yard dipper, 35 foot boom, single cylinder Fairbanks-Morse Engine of ample power. Gasoline storage tank 200 gallons capacity. Electric light plant for 25 lights. To be constructed so that it will travel ahead of the ditch, excavate toward itself and to move forward under its own power, and to travel on endless webb track.

Mr. Mahoney: Shop order No. 188, dated March 9th, 1910, of The Fairbanks Steam Shovel Company just identified by the witness as being the order for the machine shown on page 46, of Defendant's Exhibit No. 30, is hereby offered in evidence, and the notary is requested to mark the same, "Defendant's Exhibit No. 33, Fairbanks Steam Shovel Company's shop order No. 188, March 9th, 1910, for back action shovel shipped to George A. Castle, Polk County, Minnesota."

Q. Do you recall the date that the Minnesota machine was actually shipped? A. No, I couldn't.

Q. Do you remember the year? A. 1910.

CROSS EXAMINATION by Mr. Edgerton.

The soil which was excavated in the San Benito job was sort of a clay. There was no rocks in it. I do not know what kind of soil was excavated on the Minnesota job, because I wasn't on that job, but ordinarily that work was just good clean clay digging. No rocks in it to speak of. The machine on that job down in Texas worked around a year there to my knowledge. I do not know what became of it after that. I was never down there again, and I never heard of it again. As to the machine in Minnesota, I couldn't say how long it was operated, but there was repairs shipped to both of them for quite a long while so they must have been working. In excavating with this machine you could elevate the boom and let it fall delivering a striking blow with the scoop, but I never did this, I never had occasion to.

Deposition closed.

(Certificate of Notary omitted.)

Mr. Mahoney: We offer in evidence the deposition of William Mitchell and Defendants' Exhibits 29, 30, 31, 32, and 33 which were offered in evidence during the taking of said deposition.

Mr. Richey: Your Honor, I find the same thing was in the Cleveland case. The blue print was Exhibit K there, and the catalog was Exhibit L. It was discussed by Mr. Sauer at pages 106, 137, 138 and 139 of the Byers record. The only difference I can see is perhaps in the horse-shedding of the witness.

Mr. Corbett: Your Honor, I think we have made it clear that there were some changes in that machine, differences in the machine from the one operated; one of them acted with the omission of the brake for the lowering and raising of the boom. That also brings out that the two-line control, which has been bragged about so much by our opponents, was old.

Mr. Mahoney: And Mitchell was the only man that ever operated it. Sauer never saw the machine, I don't think.

Mr. Corbett: He may have seen it, but didn't operate it.

Mr. Richey: He said they had that brake in order to hold it in to the work.

Mr. Corbett: This operator said not.

DEPOSITION FOR THE DEFENDANTS

Taken at Marion, Ohio.

NOTICE OF TAKING TESTIMONY.

MR. PHILIP E. SIGGERS,
918 F Street, N. W.,
Washington, D. C.

MESSRS. RICHEY & WATTS,
1090 Union Trust Building,
Cleveland, Ohio.

Attorneys for Plaintiff:

Please take notice that the defendant herein will take the testimony of Frank H. King, who is approximately sixty-seven (67) years of age, and who resides at 353 South State Street, Marion, Ohio, who is ancient and infirm and who is about to go out of the district in which the above-entitled case is to be tried, and to a greater distance than one hundred (100) miles from the place of trial, before the time of trial, for use on behalf of the defendant at the final hearing of this cause, before Henry A. Mickley, a Notary Public in and for the County of Marion, Ohio, who is not of Counsel nor interested in this cause, at the office of Henry A. Mickley, 129 N. Main Street, Marion, Ohio, on the 28th day of November, 1930, at 10:00 o'clock A.M., and thereafter from day to day as the taking of the deposition may be adjourned; and such testimony will be so taken in accordance with the provisions of Sections 863, 864 and 865 of the Revised Statutes of the United States and the Federal Equity Rules.

You are invited to attend and cross-examine.

EDWIN P. CORBETT,
Attorney for Defendant,

Dated at Columbus, Ohio, this 25th day of November, 1930.

Service of a copy of the above notice is hereby acknowledged this 26th day of November, 1930.

RICHEY & WATTS,
Attorneys for Plaintiff.

PRINTER'S NOTE:

A like Notice was issued on behalf of The General Excavator Company and was signed by Mr. Edward L. Reed.

The following deposition was taken on behalf of both defendants, pursuant to the above notice, at the office of Henry A. Mickley, a notary public, 129 N. Main Street, Marion, Ohio, commencing at ten o'clock A. M., November 28, 1930. Counsel for all parties being present.

FRANK H. KING, a witness called by defendants, being first duly sworn, testified as follows:

DIRECT EXAMINATION by Mr. Mahoney.

My name is Frank H. King. I reside at 353 South State Street, Marion, Ohio. I am retired. I am sixty-eight years of age. I am expecting to go to California in about two weeks. I was employed by the Marion Steam Shovel Company of Marion, Ohio, from the time they were started until they sold out. This would be about forty-three years. I think the company was first organized about 1885. I didn't help to organize it. George H. King, formerly president of the Marion Steam Shovel Company, was my brother. I have been employed in nearly every capacity at the Marion Steam Shovel Company. I worked all through the shop in every capacity, helped erect machines, and operated machines, and later I was traveling salesman, and worked in the engineering department about two years, and I was a traveling salesman forty years ago this next January, and salesmanager from about 1910 until they sold out. I think it was about three years ago next February that they sold out. The company is still in existence, however, but under a different management. At the present time I am not connected with the Marion Steam Shovel Company in any capacity. When I was traveling salesman for the Marion Steam Shovel Company, my territory consisted of all of the United States, Canada and Mexico. As an operator of power shovels I was used as demonstrator for the Marion Steam Shovel Company to operate shovels that had been sold to various purchasers. There was no time limit on the period we were to operate the shovels. We were instructed to stay until we got the money, got a settlement, it is usually about thirty days. During that period we had to actually operate the shovel on the job for the purchaser. The printed copy of United States Letters Patent 579,589, dated March 30, 1897, to George W. King, shows a device that was manufactured

by the Marion Steam Shovel Company. I saw shovels like those shown in the drawings of this patent built and operated. The George W. King patentee of this patent 579,589 was my brother. The Marion Steam Shovel Company sold machines like those shown in patent 579,589 to the Charleston South Carolina Mining and Manufacturing Company. I am not sure of the name, they got two of the back action and two of the standard. This company was located southwest of Charleston, South Carolina, probably twenty-five miles.

I do not recall whether or not any back action shovels like that shown in King patent 579,589 were ever sold to any other companies in that region, but there was one that was sold that went to Bartow, Florida. That is all that I can recall that were sold. I sold these back action shovels about which I have been testifying myself, I know that. These shovels were used in Charleston, South Carolina, and in Bartow, Florida, for digging phosphate. In South Carolina where this phosphate was found, there was about four to six foot of overburden, and I can't recall exactly but there was a thin vein of phosphate not exceeding about two feet. The character of this phosphate is very hard in the nature of cement gravel. I don't know whether you would call it rock or pebble, it had shark teeth and all of that stuff in it, now what would you call that pebble or rock. Under this vein of phosphate formation there was very soft material. You could take a pole and run it down quite a distance right through it. The pole could be pushed down by hand. The manner in which the phosphate was mined with this back action shovel shown in the King patent 579,589 was to strip the overburden off with the standard shovel. You then follow with the back action shovel excavating and loading the phosphate in cars located on the bank. By a standard shovel I mean a forward acting shovel. This forward acting shovel merely stripped off the dirt that was above the phosphate vein or formation. This over-burden was stripped and then dumped where the phosphate rock had already been taken out. The deposits of phosphate in the Charleston, South Carolina, and the Florida regions are commonly known as phosphate rock.

The reason that a forward acting shovel could not be used to take out the phosphate rock in South Carolina and Florida is because a forward acting shovel would not have any foundation to run on as the material it

would have to run on would be too soft to carry it. This is because beneath the phosphate is very soft material as I said, you could run a pole right down in it. Therefore, a forward action shovel could not be supported on this soft material which would be beneath the phosphate rock as the shovel would have to dig forwardly. With the back action shovel, however, this shovel could rest on the hard phosphate formation and dig towards itself. The phosphate formation or rock was sufficiently strong to bear up this heavy shovel even though the material underneath the rock was of a very soft nature. This back action shovel built by the Marion Steam Shovel Company and used in these phosphate fields in South Carolina and Florida weighed approximately sixty tons. As traveling salesman for the Marion Steam Shovel Company, I was required to visit these phosphate fields in South Carolina and Florida a couple of times a year, and I saw these machines in operation on these various occasions that I visited these fields.

Mr. Mahoney: The printed copy of the George W. King patent No. 579,589, dated March 30, 1897, is hereby offered in evidence, and the Notary is requested to mark the same "Defendant's Exhibit No. 53, printed copy of King patent 579,589, dated March 30, 1897."

Mr. Edgerton: The exhibit is objected to as not having been set up in the answer, either as a publication or a prior knowledge and use.

Mr. Mahoney: The Marion Steam Shovel Company public use of the back action shovel in the South Carolina and Florida phosphate fields is set up in The Osgood Company's Answer, and at the proper time notice will be furnished to plaintiff in accordance with the statutory requirements.

(Narrative continued.) My brother George W. King is now dead. The catalog just handed to me is a Marion Steam Shovel Co. catalog and bears a publication date of the year 1900. I think Mr. A. E. Cheney had considerable to do with the preparation of this catalog. Referring to page 55 of the Marion Steam Shovel catalog dated 1900, this page contains a testimonial letter from the Charleston South Carolina and Manufacturing Company from Fetteressa, South Carolina, dated November 27, 1896. On page opposite page 55 of this catalog is shown an illustration of the back action shovel near Bar-

tow, Florida that was made in accordance with the King patent 579,589 about which I have testified. I have actually seen the shovel illustrated on the page opposite page 55 in operation. I took the photograph shown opposite page 55 in this catalog. This photograph shows the back action shovel in actual operation at Bartow, Florida. Referring to the photograph, the operation of this back action shovel is as follows. If you are digging phosphate with a back action shovel, you see this is the phosphate line down here, and this is the overburden here; above letter A is the overburden, below letter A is the phosphate. The Bartow field has a heavier vein than the Charleston field. In this photograph the overburden which is above the line which I have marked with the letter A was stripped off with a traction dredge. It was in the Charleston field that we used the forward action shovel to strip the overburden. In the Charleston field the vein varied in depth to two feet from probably fourteen to fifteen inches.

Q. Will you kindly read the letter from the Charleston Mining and Manufacturing Company into the record as shown on page 55 of this catalog?

Mr. Edgerton: We object to this request as the catalog speaks for itself.

A. Yes, "Charles W. Trotter, President. W. M. Wallace, Supt. Sales and Accounts. C. A. Merriam, Supt. of Works. Charleston, S. C. Mining & Manuf'g Co. Philadelphia Office, No. 328 Chestnut Street, Rooms No. 73-74.

Telegraph Office, Fetteressa, S. C. Nov. 27, 1896.
Fetteressa, S. C.
Marion Steam Shovel Co., Marion, Ohio.

Dear Sirs: Enclosed find photographs of our four steam shovels purchased from your company some three years ago. These machines have been constantly employed in uncovering and loading Phosphate Rock since the date of their purchase and work in pairs as shown in the picture. The ordinary machine works in advance removing the overburden and depositing it on a waste bank; while the rear-acting or rock machine, follows on the same track level and loads the rock on cars on the opposite side of the cut.

We are glad to be able to say that no serious break has occurred to any of the machines during this time,

although some large stumps have been handled when cutting through timber land. This record we consider quite above the average and worthy of mention for the benefit of those contemplating the purchase of this class of machinery.

Yours truly,

CHARLESTON, S. C. M. & M. Co.,
C. A. MERRIAM,
Supt. of Works."

Mr. Richey: We, of course, object to the letter as being hearsay on the part of the man that wrote it.

Mr. Mahoney: It is a publication, Your Honor, and bears a publication date. The same objection was raised at Cleveland, and the Court overruled it.

Mr. Richey: Of course, even as a publication it is a self-serving document of the facts stated there.

The Court: What is the date of this catalog?

Mr. Mahoney: The date of the catalog is 1900, which is long prior to anything conceived here.

(Mr. Mahoney continues reading deposition.)

(Narrative continued.) I am the F. H. King listed as traveling salesman on the title page of this 1900 Marion Steam Shovel catalog. The dipper shown on the page opposite page 55 digs by pulling towards the center of the machine, that is, the digging is done by pulling the dipper to the machine while standing on the phosphate rock. The cars to the right of the machine in the illustration are to receive the phosphate rock after it is excavated. In loading into the dump cars the back action shovel is operated by filling the dipper, pulling towards the center, raising up and swinging over and discharging into the cars.

Q. Do you recall the exact or approximate date that the Marion Steam Shovel Company manufactured and sold the back action shovel shown in the illustration shown opposite page 55, and other machines which were made like that shown in King patent 579,589? A. No, I don't recall the exact date but it was in the early nineties.

Q. By referring to the date of the letter on page 55, would you say that the machines were manufactured and sold by Marion Steam Shovel Company prior to Novem-

ber 27th, 1896? A. I imagine quite awhile before that time.

Q. Do you recall when the Florida phosphate fields were opened up? A. In the early nineties.

Q. Have you any way in which you fix that date when these fields were opened up? A. The Florida phosphate fields and the Iron Range in Minnesota opened up in 1892.

Q. Did the Marion Steam Shovel Company furnish shovels for both of these fields, that is, the Florida phosphate fields and the Iron Range in Minnesota, shortly after they were opened? A. Yes, sir, but there were no back action shovels on the Iron Range.

Q. Was The Marion Steam Shovel Company the first company to furnish shovels for both of these fields, the Iron Range development and the Florida phosphate fields? A. We put the first shovels in the Iron Range, but I can't say about Florida.

Q. How soon after the Florida phosphate field opening was the back action shovel shown on page 55 of the 1900 catalog there sold and used? A. I was down there in 1892 and sold different machines from time to time, just when these were sold I do not know, probably a few years after.

Q. But it was before the year 1896 that these shovels were sold? A. I think so.

Mr. Mahoney: The front cover, the page opposite the title page, bearing the date 1900, the title page, and page 55, and the illustration on the page opposite page 55, of The Marion Steam Shovel catalogue are hereby offered in evidence as Defendant's Exhibit No. 54, and the Notary is requested to mark the same, "Defendant's Exhibit 54, front cover, page opposite the title page bearing the date 1900, the title page, page 55, and the page opposite page 55, bearing the illustration, of Marion Steam Shovel catalogue dated 1900."

(Narrative continued.) The paper just handed me bearing an illustration and some printed matter shows a standard machine and a back action shovel on the Charleston, South Carolina Mining and Manufacturing Company's work. I have indicated on the illustration by the letter "A" the position of the standard shovel. I have indicated by the letter "B" on this illustration the position of the back action shovel. As to who took this photograph, I took most of them, I rather think I

took these. I took the one at Bartow, I know. It would be pretty hard to say but I think I took these. I have actually witnessed the operation of the Marion back action shovels in the Charleston, South Carolina, phosphate fields. The forward acting shovel shown by the letter "A" on this illustration was used for stripping the overburden. The back action shovel designated by the letter "B" was used for digging phosphate rock.

Mr. Mahoney: The sheet bearing the illustration of the Marion back acting shovel in the Charleston, South Carolina, field, is hereby offered in evidence and the Notary is requested to mark the same, "Defendant's Exhibit No. 55, illustration of Marion Steam Shovel Company back action shovel in Charleston, South Carolina, phosphate fields."

Mr. Edgerton: The exhibit 55 is objected to as secondary evidence, and as incompetent and immaterial.

Q. To what extent can a power shovel dig rock?

Mr. Edgerton: The question is objected to as being vague.

A. If it is anything like rock it can't dig it at all. But if it is a soft shale rock you can dig it medium well, depending altogether on the nature of the rock.

Q. Will a steam shovel dig solid lime stone or rock of that hardness I will say? A. It will not.

Q. In excavating when you come to solid rock, what has to be done? A. Use explosives.

Cross Examination by Mr. Edgerton.

Q. Referring to Defendant's Exhibit No. 55, the machine illustrated therein appears to be mounted on railway car wheels, which wheels are supported on a track, the track being laid ties as in railroad construction, is that right? A. Yes, sir.

Q. Do you recall how long that machine was used? A. No, I don't.

Q. Do you know about how long it was? A. About thirty feet.

Q. And how much track was laid for the machine when it was in its operating position, I refer now to machine B? A. The track is cut into about four foot sections, and as the machine is moved these sections were taken up and laid back of the machine as the machine is moved back,

Q. But the machine always rested upon at least thirty feet of track, is that right? A. Approximately thirty feet of track.

Q. And as illustrated, the machine B rested on a track in which the ties were spaced very close together, were they not? A. The ties were placed about two feet apart,

Q. And in reference to the illustration in the catalogue Defendant's Exhibit 54, this machine was also mounted on wheels supported by track with ties, the same as shown in Exhibit 55? A. Yes, sir.

Q. Again referring to the illustration in Exhibit 54, is the material in front of the machine and immediately in front of the bucket phosphate or phosphate rock? A. Phosphate rock.

Q. And in Exhibit 55, is the material in the foregrounds of the illustration and under the bucket phosphate rock? A. Phosphate rock.

Q. Have you ever operated one of these machines in this phosphate rock? A. No, sir.

Deposition closed.

Mr. Richey: While this King patent was not in the Cleveland case, this catalog was there as Exhibit F and testimony there regarding it.

Mr. Mahoney: The patent also specified, Your Honor, that the purpose of the patent was for a rock digging machine; it specifies that as one of the purposes, and that was not in suit and clearly in this suit, a different patent.

Mr. Corbett: Your Honor, there are two King patents, and I would like to have you particularly note that this patent was not in the Cleveland suit, and it refers to digging rock in the specification.

Mr. Richey: A patent cannot prove it can dig rock by merely saying so. It is all cumulative of what was in before. There they said it dug this rock.

DEPOSITION FOR THE DEFENDANT
Taken at Akron, Ohio.

NOTICE OF TAKING TESTIMONY.

MR. PHILIP E. SIGGERS,
918 F Street, N. W., Washington, D. C.

MESSRS. RICHEY & WATTS,
1090 Union Trust Building, Cleveland, Ohio.
Attorneys for Plaintiff:

Please take notice that the defendant herein will take the testimony of George E. Wagner, 870 Bloomfield Avenue, Akron, Ohio, who resides more than one hundred miles from the place of trial herein, for use on behalf of the defendant at the final hearing of this cause, before Mary McGowan, a Notary Public in and for the County of Summit, Ohio, who is not of counsel nor interested in this cause, at the office of Mary McGowan, Room 215, Ohio Building, Akron, Ohio, on the sixteenth day of September, 1930, at ten o'clock a. m., and thereafter from day to day as the taking of the deposition may be adjourned; and such testimony will be taken in accordance with the provisions of Sections 863, 864 and 865 of the Revised Statutes of the United States and the Federal Equity Rules.

You are invited to attend and cross-examine.

EDWIN P. CORBETT,
Attorney for Defendant.

Dated at Columbus, Ohio, this 12th day of September, 1930.

Service of a copy of the above notice of taking testimony is hereby acknowledged this 15th day of September, 1930.

RICHEY & WATTS,
Attorneys for Plaintiff.

PRINTER'S NOTE:

A like Notice was issued on behalf of The General Excavator Company and was signed by Mr. Edward L. Reed.

The following deposition was taken on behalf of both defendants, pursuant to the above notice, at the office of Mary McGowan, a notary public, Room 215, Ohio Building, Akron, Ohio, commencing at ten o'clock a. m., September 16, 1930. Counsel for all parties being present.

GEORGE E. WAGNER, a witness called by defendants, being first duly sworn, testified as follows:

DIRECT EXAMINATION by Mr. Mahoney.

My name is George E. Wagner. I reside at 870 Bloomfield Avenue, Akron, Ohio. I am forty-eight years of age. I am at present employed by the Star Drilling Machine Co. of Akron. The nature of my duties is sales work, designing engineering, and general supervision of shovel business. This company manufactures power shovels, and my designing work relates to this phase of the business.

I was formerly employed by the Keystone Driller Co. I began my employment with them about 1903, and I continued in their employment until 1926. My position with them just prior to the time I left their employ was chief draftsman. I left their employ voluntarily. I am testifying under subpoena in these cases. While I was employed by the Keystone Driller Company, I had charge of general design and drafting relating to power excavators manufactured and sold by that company. I have seen machines like that shown in Defendant's Exhibit 24. The manufacturer of that machine was the Keystone Driller Company. I did designing and drafting work on the machine illustrated in Figure 1 of Defendant's Exhibit 24. I am acquainted with LeRoy P. Clutter patentee of the machine shown in Defendant's Exhibit 24. The machine shown in Defendant's Exhibit 24 having the attachments shown in Figure 1 was called a ditcher. The Keystone Driller Company actually made and sold an excavating machine with the particular type of ditcher scoop assembly as shown in Figure 1 of Defendant's Exhibit 24. Referring to Defendant's Exhibit 24 Figure 1 the name of the part to which a lead line has been drawn from the letter "A" is called a boom extension plate. The name of the part indicated by the numerals 19 in Figure 1 of Defendant's Exhibit 24 I think is called a beam connection bar. In the machines actually manufactured and sold by the Keystone Driller

Company there were parts corresponding to the parts marked 19 and to the parts which I have indicated by the letter "A" on Figure 1 of Defendant's Exhibit 24. The parts marked 19 were originally made on the Keystone Driller Company machine of the same shape and contour as that shown on the drawings Figure 1 of Defendant's Exhibit 24, but were later changed. The first machine had straight connecting bars like that shown in Figure 1 of Defendant's Exhibit 24 and these machines were manufactured and sold by the Keystone Driller Company. The reason that bars 19 were changed was because in actual field practice an interference developed between the bar 19 and the one marked with the letter "A".

I am marking with the letter "B" the point on the part "A" that the connecting bar 19 contacted with, or interfered with. This interference of the part 19 with the boom extension plate "A" affected the inward movement of the ditcher stick 1 towards the boom and acted as a stop.

Q. Did this interference of part 19 with the boom extension plate "A" limit the angular approach of the ditcher stick to said connecting member 19?

Mr. Edgerton: The question objected to as leading.

A. Yes.

Q. Were complaints received by the Keystone Driller Company from machine owners of this interference between the connecting bars 19 and the end of the boom?

Mr. Edgerton: The question is objected to, the witness has not been qualified as occupying a position to have contact with the machine owners.

A. Yes.

(Narrative continued.) These complaints were referred to me for action. In order to eliminate this interference I had the bar made in bent form instead of straight. In other words the bars were permanently bent or curved at the factory to avoid this interference.

Q. I now hand you a tracing taken from Clutter patent 1,317,431 dated September 30, 1930, which is Defendant's Exhibit 24, and ask you to state whether or not this tracing which has been twice enlarged and modified by the elimination of some of the parts not here concerned, shows substantially the manner in which the connecting bar 19 interfered with the boom of the machines

manufactured and sold by the Keystone Driller Company about which you have been testifying?

Mr. Edgerton: The question objected to as leading and improper.

A. That is correct.

Q. Kindly mark on this tracing, referred to in the previous question, numerals and letters corresponding to like parts on the drawing of Defendant's Exhibit 24?

A. Witness marks the drawing.

Mr. Mahoney: Tracing just referred to by the witness in his answer to Q. 36 and Q. 37, is hereby offered in evidence as Defendant's Exhibit No. 34 and the Notary is requested to mark the same, "Defendant's Exhibit 34, tracing showing interference between connecting bar 19 and boom of machines made and sold by the Keystone Driller Company.

Mr. Edgerton: The exhibit is objected to as immaterial, incompetent and insufficiently proven.

(Narrative continued.) The blue print which I have just been handed is a Keystone Driller Company blue print, the general title is "Details Ditcher Scoop for Excavator Machine." This blue print bears the date of June 13, 1914. The date on the drawing would mean that this drawing was made or completed on June 13, 1914. This drawing bears the number P 48. The letter P in front of the number on this drawing was a designation used in connection with power shovel parts of drawings. Referring to part marked P 2805 on this drawing, that part is a beam connecting bar. This part P 2805 corresponds to the part marked No. 19 of Figure 1 of Defendant's Exhibit 24. The part marked P 2805 on Keystone Driller Company drawing P 48 was the connecting bar that was first used on machines manufactured and sold by the Keystone Driller Company under the Clutter patent 1,317,431, Defendant's Exhibit 24. This part P 2805 on Keystone drawing P 48 was the straight link that I have testified interfered with the end of the boom.

Mr. Mahoney: The Keystone Driller Company blue print No. P 48 entitled "Details—Ditcher Scoop for Excavator Machine" is hereby offered in evidence and the notary is requested to mark the same "Defendant's Exhibit No. 35, Keystone Driller Company drawing P 48."

(Narrative continued.) The catalog that has just been handed me is a Keystone Driller Company catalog. On page 1 the title of this catalog "Bulletin 901—4th Edition January, 1917." Referring to page 7 of this Bulletin 901 the figure 708 designates a Keystone ditcher outfit. This illustration of figure 708 shows the ditching machine that was manufactured and sold by the Keystone Driller Company while I was employed by them. This illustration figure 708 on page 7 of Keystone Driller Company Bulletin No. 901 represents an actual photograph of a Keystone Driller machine. This figure 708 shows the Keystone Driller Company machine having a straight connecting bar 19 thereon about which I have been testifying. I have marked with the letter "B" on figure 708 the point where the connecting bar contacted or interfered with the end of the boom during a certain part of the cycle of operation of this machine. The machine shown in Keystone Bulletin 901 and illustrated in Figure 708 was manufactured and sold by the Keystone Driller Company prior to the date of January, 1917. This machine as I have testified had the straight connecting bar thereon, which contacted with the end of the boom at the point marked with the letter "B," and which acted as a stop during a certain cycle of the operation of the machine. Referring to Bulletin 901, page 9, Figure 713 shows a ditcher scoop. The ditcher scoop shown in Figure 713 was actually made and sold by the Keystone Driller Company prior to January 1, 1917. This Figure 713 also shows the straight connecting bar which was used on the Keystone Driller machine and which connecting bar interfered with the end of the boom as I have testified.

Mr. Mahoney: The parts of Keystone Driller Company catalog previously referred to by the witness in his answers to the foregoing questions consisting of the cover, the inside title page (1) bearing the title Bulletin 901, 4th Edition, January, 1917, pages 7 and 9 are hereby offered in evidence as Defendant's Exhibit No. 36 and the Notary is requested to mark the same "Keystone Driller Company catalog consisting of the outside cover page, inside title page (1) bearing the title Bulletin 901, 4th Edition, January, 1917, and pages 7 and 9 thereof."

No cross examination.

Deposition closed.

Mr. Mahoney: Deposition of George E. Wagner and Defendant's Exhibits 34, 35, 36 offered in evidence during the taking of deposition are hereby offered in evidence here.

GEORGE E. TURNER, a witness called by defendants, being recalled, testified as follows:

DIRECT EXAMINATION by Mr. Corbett.

I have been actively and directly employed, in either the designing, manufacturing, selling or operation of excavating machinery for thirty-four years. At the present time I am engaged in designing excavating machines. I have read and I am familiar with the depositions relating to the development of Daniel H. Mahoney, which has been presented in this suit.

Q. Will you please compare the structure of the Mahoney with the machine that was used in the cornfield south of Vincennes, Indiana, with the machine shown in the LeRoy Clutter patent in suit?

Mr. Richey: You mean the one in Exhibit 4?

Mr. Corbett: In speaking of the machine used in the cornfield, I refer to Defendant's No. 4. Refer to that.

The Court: Well, it is the Mahoney machine.

Mr. Corbett: Mahoney machine, yes.

A. I will answer that question, Your Honor, by using this enlarged photograph of the Mahoney machine.

This is the machine that was tried out or tested south of Vincennes. In this machine there appears a tractor which was used as a motive power of towing the machine or moving it over the work, and at the same time there was a special steam connection between the boiler of that tractor and the engine of the digging mechanism, which supplied all the steam and which actually operated the digging part of the machine. There is shown here the front end, an A frame built up vertically, and outwardly from that inclined forward is a mast tied across here to this A frame, and from this here running upwardly is a boom B, shown here. Pivoted in this boom at this point is the handle G, and on the lower end of the handle there is a scoop T, and this is pivoted in the forks of the handle here (indicating). On the outside of the handle is a pipe strut, hinged here near the top end of the handle, and the intention or thought, apparently, was that this would drop in on top of the bucket when it was

down in the work travelling forward with its rear end down, to act as a strut, to keep the bucket from turning over, if that should happen.

There is a pulling line here, somewhat indistinct, rather hard to see, from the forward open end of the bucket into the machine. There is a hoist line marked "E" here at the top. This is shown in three parts, two of these parts passing around the sheave here, coupled with the links A to the short upper end of the handle G, and the other part, the third part, is tied to the boom here (indicating). There is another line here passing over the sheave at the top, which comes down and passes around a small pulling sheave at the back of the bucket, which is carried on up and tied to the boom here (indicating).

Q. Please compare that machine with the device of the LeRoy Clutter patent? A. In this machine, the boom B corresponds to the boom 15 in the Clutter, in red. The dipper stick G corresponds to this dipper stick here marked 1 in Clutter. The bucket marked T corresponds to a point here, for example, marked 3 in blue. This lower line, which is somewhat indistinct, the hauling or pulling line, corresponds to this one here marked 23 in the Clutter. This line up above marked E in the three parts corresponds to this chain or line here, marked 21, in two parts. The links here, marked A, correspond to these links here marked 19. This additional line in the back of the bucket corresponds with this line here to the latch, that being used for the dumping operation there.

Q. Please compare briefly this Mahoney structure with the structure used by the Osgood Company, and compare the two briefly with the structure shown in the Clutter patent in suit. A. I will use this chart marked 17 in answering this question. In comparing the Mahoney and the Osgood, in these two machines, in red are shown booms pivoted at the lower end; there are shown dipper handles pivoted between their ends, in orange here, one in the outer end of the boom, and the other near the outer end, both pivoted in the boom. They are shown in both, in the Osgood rigidly attached to the lower end of the handle, and in the Mahoney pivotally attached. There is shown in each a hauling or pulling line attached to the inward and open end of the bucket; there is shown a hoist line, which is shown in three parts here in Mahoney and in three parts here in the Osgood. There is

shown in each of these a connection with this upper line, a link connection shown here (indicating).

Q. Each of those links carries a sheave, do they not? A. Carry a sheave. The line here passing out to the rear is a latch tripping line. In this it is shown here over this small sheave.

Comparing the two with the Clutter, or rather Clutter with those two, we have here in the Clutter the boom pivoted at its lower end, a handle pivoted through the boom between its ends here (indicating); the bucket pivoted at its rear end to a handle with the lower end, but arranged with this sliding pin to the latch here by which it can be made rigidly attached. We have a pulling line, the same as the other; we have the hoisting line attached here through these links to the upper end of the handle, and the sheave chain support here, with these upstanding members, which do not appear in the other two.

Q. Assuming that claim 4 of the Clutter patent in suit is broad enough to read upon the Osgood structure, please point out to the court whether or not that claim reads upon—reads literally upon the Mahoney structure?

Mr. Richey: Well, I object to that. The interpretation of the claim, and reading of the claim upon the particular structure is the function of the court.

Mr. Corbett: Your Honor, this is common practice in patent litigation, and it is merely for indicating by illustrative chart the expert's interpretation of the references.

The Court: I think he may do that. It is not binding upon the court.

A. I will use, Your Honor, then this chart. In an excavating machine a pivoted boom, which we find here. Second, a scoop-carrying member pivotally connected therewith.

Q. What is the description of that? A. A scoop-carrying member pivotally connected therewith.

Q. I mean, what is the color of that part? A. That is orange. Then, a pulling member for elevating and lowering said boom. That is in black here. A pivotal means carried by the boom and connecting the pulling member therewith, and said scoop-carrying member. A scoop connected with the scoop-carrying member and

projecting toward the boom (indicating). And a pulling member connected with said scoop (indicating).

The Court: Now, it reads the same way on the Osgood device, doesn't it?

Mr. Corbett: Well, if it is interpreted broadly; our position is that if it is interpreted broadly to read on the Osgood device, it reads the same way on this device.

Mr. Richey: Of course, our contention is different.

Q. Have you read, and are you familiar with, the depositions of John B. Webber and Walter S. Culver? A. I have, and I am.

Q. Will you please briefly summarize for the court the structure of the machine referred to in these depositions, its manner of operation, and the condition under which it is operated?

The Court: You have got two Webber patents here, Mr. Corbett, haven't you? You are referring to No. 557,350.

Mr. Corbett: Well, anyway this relates to the use of the machine, the Webber machine, the Vulcan Iron Works.

Mr. Richey: You contend this was the same machine that was discussed in the deposition?

Mr. Corbett: 557,350 is the patent that the matter relates to.

The Court: This is 528,312.

Mr. Corbett: Better refer to the patent itself.

The Court: Well, this is the patent that was in the Cleveland suit, according to the list that you gave me. This is an earlier Webber patent than the one you read the depositions about, as I gather it.

Mr. Corbett: Perhaps it is.

Mr. Richey: This patent was not in the Cleveland suit. Here is the one that was in the Cleveland suit.

Mr. Corbett: Well, he can talk, Your Honor, from the photograph of the device.

The Court: All right. From the listing, when the prior art patents were given, it was agreed that J. B. Webber 528,312 was in the Cleveland suit. That is this patent.

Mr. Richey: Well, I am sorry, Your Honor, but somebody misled you, and I must apologize. I think everybody will agree that this has an angle in the boom there, and that is a curve there.

Mr. Mahoney: Different structure as shown in the patent. There was a structure in the deposition that we took, and that showed that this man had made a device different from that in the other patent; he made a device with some improvements.

Mr. Richey: Well, this patent was not set up in the answer, No. 528,312. Let's get straightened out about these two patents, regardless of the depositions. This 528,312 is not set up in the answer in this case.

Mr. Corbett: That is immaterial.

Mr. Richey: And it was not in the Cleveland case. That is right?

Mr. Corbett: It can be offered at any time.

Mr. Richey: Well, let's get it straightened out first.

The Court: You gave me a list of prior art patents when you started this case, and you gave me 528,312 as being in the Cleveland suit. That is this patent. Now, Mr. Richey says that is a mistake. I would like to get it straightened out.

Mr. Corbett: Yes, Your Honor, we want to get it straightened out.

Mr. Richey: Well, we object to this as not being set up in the answer.

Mr. Corbett: We are at liberty to discuss any part of the prior art.

Mr. Mahoney: We can offer it at any time, just as a part of the prior art.

Mr. Corbett: We are entitled to discuss it as a part of the prior art.

Mr. Richey: I think that is correct, but I object to it as far as it being used as an anticipation.

Mr. Corbett: We are not using it as an anticipation but as a part of the prior art.

Mr. Richey: Well, all right.

Mr. Corbett: We will get that matter straightened out for you, I will go ahead, if Your Honor has no objection.

The Court: All right.

(Last question read)

A. This is chart No. 2, J. B. Webber, No. 528,312, October 30, 1894. Here we have in this machine a boom 4. In this machine we have a boom extending outwardly but not pivoted, pivoted in the outer end; we have a handle marked 4 in the patent between its ends; we have a hauling member which also acts as a hoisting member,

marked 62 in this patent, extending upwardly to the central or higher portion of the boom passing over the sheaves there and then inward to the machine. This is an instroke machine, and one where this particular construction could be removed and replaced by the standard out-stroke boom dipper handle. In other words, the rear portion is just a standard shovel. In operation, the dipper would be swung outwardly and away, and then dropped into the work and pulled in by the line 62 to fill a bucket, and finally as it come to the top of the surface would be carried on up by that line as a hoisting line to about as high a point as you could possibly go to with the boom. At this point the whole assembly, the boom, handle and bucket would be swung out as usual, and ordinarily to one side or the other, and the contents would be dumped from the bottom of this bucket, which is marked 5 here, by tripping the latch, which is the same as if the bucket was operated on a shovel in the opposite direction. And that could be done either on a spoil bank or in cars or wagons. This comes up to a point here (indicating), and then it is in position to be swung out. In that case this bottom would be over a truck or a car, and when you tripped the latch, it would be just the same, it is the same handle and bucket used in the regular way, and then the contents would be dropped directly into a truck or wagon, or on the spoil bank.

The idea involved in a machine like this was to carry the weight of the machine backwardly to the rear from the excavation before the surface is disturbed, as are all these instroke type of machines, and a machine of this type could be used, of course, for digging trenches for laying water pipes just the same way as any other machine of the instroke, of that type. This machine was used for digging large trenches for laying water pipe, and it could be used, of course, for strip mining; that is, mining in material that was taken up over a considerable area and dumped into cars and hauled away for disposal.

Mr. Corbett: Your Honor, before going on, so as to clear up that question, our understanding is that this patent 557,350, which is referred to in this deposition, was in the Cleveland suit; there was no testimony about the use of it.

The Court: No testimony about use?

Mr. Mahoney: No.

Mr. Corbett: The other patent, No. 528,312, was not in the Cleveland suit. I think that straightens that out.

The Court: 528,312, you say, was not? Well, now, I have got the notation here that it was, and I was told so by somebody.

Mr. Corbett: Well, I don't know how that come about, but I think we are straight on it now.

Mr. Mahoney: This one here was not in the Cleveland suit.

The Court: How about that, Mr. Richey?

Mr. Richey: No, sir, that was not in the Cleveland suit. But we claim that the testimony of Mr. Shaefer—

Mr. Mahoney: Mr. Shaefer never testified about any of the Webber patents.

Mr. Richey: Wait until I have gotten through. We claim that the testimony of Mr. Shaefer was with regard to this type of machine shown in the Webber patent.

The Court: You are relying on the record, 112 and 113?

Mr. Richey: I think that is right.

The Court: Well, this is the Vulcan machine, isn't it?

Mr. Mahoney: This is the Vulcan.

Mr. Richey: Both of them the same thing; except for bolts and things of that kind.

Mr. Mahoney: No testimony offered about any Vulcan machine in the Cleveland suit.

The Court: You claim now that the machine referred to on pages 112 and 113 in the Byers record is the same machine as this Webber patent?

Mr. Richey: It is not identically the same machine, but it is the same type of machine, and it has the same boom that swing in horizontally, but not in vertically, with the dipper on the end of the stick, that runs up and down and swings in.

Mr. Corbett: I think that makes it clear that that is not the same machine.

Mr. Mahoney: Not even made by the same company, Your Honor.

The Court: Well, that is a matter of argument.

Q. Have you read, and are you familiar with, the deposition of F. H. King which has been read in this suit? A. I have, and I am.

Q. Will you briefly summarize for the court the operation and structure of the device testified to by Mr. King?

The Court: Well, now, that is with reference to the King patent.

Mr. Corbett: Yes.

A. This is chart 3, Your Honor, G. W. King shovel. This is No. 579,589, March 30, 1897. In this machine we have a triangular-shaped boom, in red; we have a dipper handle, in orange, marked L; the boom is marked in one place with a small "d"; and this handle L pivoted between its ends at the outer end of the boom, and on the lower end of the handle we have the scoop or bucket M rigidly attached. There is a hauling line, a hoisting line marked N, and in that operation of this machine, the bucket is swung back in this position, and the line N pulls it forward into the work, to dig and fill it, and then continues as a hoisting line bringing it up to as high a point as is possible here on the boom. In this case it is swung out to a stop as standard shovels swing their booms, with the bottom of the bucket here in this position. This brings it over a car or spoil bank for dumping. This has the same bottom door as in standard shovel buckets, practically the same thing, turned in the opposite direction, and the door is then tripped to dump on the spoil bank or into cars. A machine like this could be used, of course, for operating over the surface; could be used for digging below the level, for digging trenches, and also could be used, and this particular machine was used, in mining phosphate rock, and I think it was designed at that time when that problem come up, to get that rock out without stripping it with the standard shovel; the fact of going forward into the phosphate, the material underneath would be too soft to take care of that temporary trackage of the weight of the machine, so the machine was worked to strip off the overburden or whatever it is called, having the benefit of the solidity of the phosphate rock as it reached up and worked inwardly and raised that.

Mr. Richey: Well, I object to all that as being hearsay, unless he saw the machine working in phosphate rock. I think we ought to be cautioned as to what he knows of his own knowledge.

Mr. Corbett: This witness is an expert on this subject matter.

Mr. Richey: I don't care if he is an expert. He cannot testify to facts that he don't know of his own knowledge.

Mr. Corbett: He is not testifying to facts; he is testifying the way the machine works.

The Court: Well, he is testifying on the assumption that these depositions are true, as I see it.

Mr. Richey: Well, that is all right, to express an opinion, but when he states that it was used to dig phosphate rock, he doesn't know that of his own knowledge.

The Court: I understand that.

Q. Please take the patent to Clutter, 1,317,431, and read the sentence beginning on page 1, line 75, and also the sentence immediately following—read it out loud. A. On page 1, beginning at line 75, "The said sheave 18 is also pivotally connected with the boom 15 at 19c by supports 17. Said supports 17 extend beyond the sheave 18 to form a guide for pulling member 21; said pulling member 21 may be operated by any suitable means. Said boom 15 is adapted to be pivotally connected with the machine at 26."

Q. What is your understanding of the purpose and action of these supports 17 in this Clutter patented device? A. My understanding of the purpose and use of these supports 19b is that they are to carry the weight of this sheave and the weight of the chain, and then that they extend upwardly and enclose the chain in such a manner as would prevent it getting off of the sheave. In other words, of fixing this weight here so that it cannot drop down onto the bottom.

Q. Do you find in defendant's structure any element which looks like these supports 17, or which have the same purpose of action? A. I do not.

Q. Will you explain to the court what, if any, differences exist between the operation of the back hoe wherein the ditcher stick is connected at its upper end on the hoisting line by a link carrying the sheave at its outer end and having this sheave supported from the boom as in the device of the Clutter patent, and the operation of a back hoe wherein the ditcher stick is connected at its upper end with the hoisting line by link carrying the sheave at its outer end, with the outer end of the link and the sheave not supported from the boom? A. Referring to this chart 66, the LeRoy P. Clutter patent, where the upstanding supports are in place, and these bars reaching out to the handle here, there is a diversion

of the power in the upper line of its effort to two points, one here on the boom considerably from its upper end and one here; any operation and arrangement like this would restrict to a considerable extent the upward movement of the handle and bucket; or, in other words, it would become sluggish at a certain point as in distinction where the supports were not there, and the line was direct, all the pull through these two bars back to the pulling point here (indicating).

Q. You have observed the Model P-15, have you not? A. Yes, sir.

Q. Will you state whether or not there is any difference in the question of the degree of power exerted by the operation of the lines in this model in comparison with the operation of the lines in an actual excavating machine of this type? A. There would be this difference, that in a model there is no way to determine the amount of power used in the model. In other words, I could use the model with my hands, and on a model of that size I might be exerting five times the power that would be exerted by the actual engine which operates the full sized machine; in other words, the leverages here over such a small model as that would not be the same at all as in a full sized machine.

Q. Now, have you read, and do you understand, the second Downie patent in suit, No. 1,543,250? A. I have, and I understand that patent.

Q. Please briefly explain to the court the problem which Downie conceived he was faced with, and refer to the specification of this second Downie patent, to illustrate what he considered to be his problem. A. This is the second Downie patent, 1,543,250, and I will use this first sheet. The problem is this, I believe, that when the point 7, where the handle is pivoted to the boom, and the point 14, where the links are pivoted to the handle, the end of the handle and the pivot or pin in which the sheave 18 turns, approach closely together, as you see here, there becomes what has been termed in this discussion a blind point.

Q. Please read from the patent any particular portions that illustrate where this blind spot was supposed to occur, and just what effect Downie conceived the blind spot created, and what he overcame. A. On page 1 of the specifications, line about 26 to 35, I will read: "More specifically, it consists in providing means for suspending the action of the connecting bar above so that the

connecting bar and the ditcher stick remain relatively motionless during such interval as the boom remains above a predetermined angle of elevation."

Q. In other words, Downie was particularly interested in the high angles of the boom where extremely acute conditions existed between the link and the boom and the stick; is that right? A. Yes, sir.

Q. Now, is there anything else in the patent specification that may throw a little light on that? A. On page 2 of this specification, at line 9, I will read down to the 19th line: "It has been found, however, that when the pivot bolts 7 and 14 are properly located with respect to the line of tension through the connecting bar 15 to give the best results with the greatest conservation of power under certain conditions, the pivot bolt 7 will be substantially in the line of pull between the cable 22 and the connecting bar pivot 14, so that it is difficult to swing the scoop 15 upwardly to gain the desired spotting range."

Again, on the same page, at line 104 down to 122 or 123: "It is believed that the attainment of this increased spotting range by other means, such as by altering the relative location of the pivots 7 and 14 with respect to each other and to the ditcher stick is not feasible in this type of machine. It will be either prohibitively wasteful of power, or would sacrifice a prohibitive degree of outward reach of the stick when lowered or extended at the beginning of the digging operation. The position of the pivots 7 and 14 is governed by considerations of power, economy and necessary digging travel or sweep of the scoop and cannot therefore be altered in order to gain the desired spotting range or outward boom reach."

Q. As I understand, Mr. Downie conceived that he is limited as to the length of his arm by the power conditions, owing to the fact that there is a continual, or more or less continual, conflict between the upper arm of the stick and the lower arm of the stick. What is your opinion regarding that condition of conflict, with any reason that you have bearing on it? A. In the actual operation of the two line instroke machine of this type, while actually digging and loading the bucket and performing the usual function, there cannot be any direct opposition of these two lines, or antagonism. There may be a short interval of time. I can illustrate that with this description. When a machine of this type is digging,

to fill a bucket, if the material is hard, the weight of the handle and the boom is always let down on the bucket, to hold it into that work, in which case the upper line is practically idle or is slackened off. During that time, of course, the full amount of power is then applied to the hauling line to dig and discharge, and when that operation is completed, and that power is not needed there any more, the upper line comes into play to raise the entire mechanism, or the bucket and contents up, and at the time the lower line, which at first was using all of the power is using practically none, it is then being released, so that the full effect would be in hoisting. There might be a time then, of course, when the load is swung up and the operation completed by swinging, all of the effort is on the upper line, because the lower line must be released. When, of course, they are balanced out in the air, just one against the other, neither being moved up and down, there is, of course, a constant playing between the two lines, but in neither case is either using the full power separately.

Q. Does this Downie second patent in suit show whether the back hoe attachment is mounted upon a full revolving machine, or 180 degree revolving machine? A. It shows that it is mounted on a semi-swing 180 degree machine.

Q. What, if any, difference exists as between the dumping of a back hoe bucket mounted on a full revolving machine, and a bucket mounted on an 180 degree machine. A. When the back hoe device is mounted on a full revolving machine, of course the dumping can take place anywhere in the full circle, 360 degrees. You can dump to the rear of the machine, if that is preferable. But there is also this difference: In the full revolving machine, the turning center is in the direct center of the operating mechanism, and not out just where the boom is pivoted. In other words, as the machine swings around on its center, instead of standing that way and the boom merely doing this (indicating), it turns right around and you get an additional length, and you get a further dumping of this distance.

Q. In other words, the whole cab which carries the boom is mounted at its center, and rotates? A. Rotates, that is right.

Q. Freely, whereas the pivoted point of the boom in the 180 degree swing is at a considerable distance, or

substantial distance, in advance of the center of the machine; is that right? A. That is right, yes, sir.

Q. Now, what difference does there exist in the necessity for any particular placing of the wagon or truck to be filled in one machine or the other? A. In the full revolving type, where a hoe is used it would be possible to bring the trucks in directly in the rear of the hoe, and bring each bucketful right around and dump it in the rear. With the semi-swing type, of course that would not be possible, as it would be necessary to have a place to get them in somewhat forward, along the side, and sometimes forward of the front end of the machine.

Q. As a matter of fact, with the full revolving machine is it a fact that if you should go into a narrow street or narrow road, and wanted to load your wagon and you were cramped for room on the side of your machine, you could have your wagon placed in the rear, and you could place your wagon in behind the machine, load your bucket in front and swing it around and empty into the wagon in the back of the machine; is that correct? A. You could.

Q. And that is commonly done, is it not? A. Yes, sir.

Q. And when you have your wagon in the back of the machine, or your truck or wagon, you can place it out any distance with respect to the machine; you can place it far away from the machine or close to the machine; is that correct? A. Just as you wish.

Q. But that is hardly true under certain conditions, where you have 180 degree swing—is it necessary—I think you said, or did you say, it was necessary for the wagon or truck to be up by the front of the machine? A. Yes, sir.

Q. Usually on the side—why? A. Because the 180 degree swing cannot get the boom around any more than at right angles, or hardly in that position, for dumping.

Q. In other words, it cannot swing back around the machine or dump around the side of the machine? A. No.

Q. Are you familiar with the defendant's back hoe attachment and the machine upon which it is customarily mounted? A. I am.

Q. Have you observed defendant's machine and back attachment in the operation of digging and dumping? A. I have.

Mr. Richey: You mean both defendants—

Mr. Corbett: Well, it would probably simplify the thing—both defendants. I represent the Osgood, but Mr. Reed would probably want to ask him the same question, anyhow.

Q. Will you state whether or not in your opinion defendant was faced with the problem indicated in the second patent to Downie, giving your reasons for your opinion? A. No, I don't think they were. In the construction of the machine there does not appear to be any place where there was any need of any special piece of attachment put on.

The Court: For the blind spot?

The Witness: Yes, at any particular spot, to put on there for the purpose of meeting that particular condition. That is, I cannot see that in the construction.

Q. Well, why don't you think that? A. When the maching was pulled up to some height, I have seen them in operation where there was no contact or anything even when the buckets were up, we will say 12 feet 6 from the ground.

Q. Well, how about the normal operating height of the scoop; did you observe several different heights of the scoop in defendant's machine? A. I have, from the normal dumping height from five or six feet, and even seven or eight, there is no approach anywhere in the mechanism or any possible conflict of anything in there.

Q. Well, even going higher, what elevations have you observed? A. Up to as high as 12 foot 6.

The Court: Well, does it use the stops that are involved in the second Downie patent?

The Witness: No, no stops.

The Court: Or any devices used or suggested by the second Downie patent?

The Witness: No.

The Court: They don't use them?

The Witness: Don't use them.

Q. Have you any drawings showing the structure—

I want to say, Your Honor, that we are going to make the structure itself absolutely clear, beyond any question, to you before we finish.

Have you any drawings showing the structure of defendant's ditcher stick, and particularly showing the reenforcing channel plate on the side of the ditcher stick which ordinarily faces the boom?

Mr. Corbett: I think it is that channel plate which has been suggested, Your Honor, that creates some interference, so as to clear that matter up before you.

A. Yes, I have such a drawing.

Mr. Corbett: I want to say, Your Honor, in order to clarify this matter right now, that in the Byers suit, at least one of the Byers devices—in the first place, the Byers machine was an 180 degree swing machine, and at least one of the Byers devices had stops, these abutments, which appeared to be practically identical with plaintiff's abutments. I think that the exhibits in the Byers case show that.

Mr. Richey: That is true, but it is a well known principle of the patent law that you cannot escape an infringing by making two parts one, or making two parts integral.

A. With this drawing, Your Honor, this represents a side view.

Q. Mr. Turner, this drawing that you have illustrates the Osgood construction? A. Yes, sir, the Osgood.

Mr. Corbett: There is a slight difference in construction there.

The Witness: This is in proportion scale. This is the side view of it, and this is the rear view.

Q. Mr. Turner, you will have to take a pencil and put a letter on there, and indicate the side view and the rear view so that we will have it for the record. A. In the side view you will see the pair of links we have been talking about at an acute angle.

Q. What is the number of those links, or give it a letter and refer to it for the record? A. The bar marked C, brought down in an acute angle until it touches the corner of this channel member D, the channel member D starting down here at the bottom and extending up to this point, a distance of several feet, and it is only when you bring this down to an acute angle that it touches at this point here, this square corner.

Q. Well, in the actual operation of the device which you have observed, did it ever, in the normal range of operation of the shovel, working operation of the shovel, did that contact actually occur? A. Not in any of the normal ranges that I have spoken of.

Q. Will you state whether or not in your opinion this channel plate was intended to act as a stop or abutment in the manner similar to stops or abutments 23 or 24 of the second Downie patent, giving your reasons for your opinion? A. I do not think this was intended for a stop. In the first place, if a bar like that was put on for a stop, it would hardly be fastened to leave this square sharp corner here. In other words, it would be cut off of the same line that this bar would come to, in that position, because after the bar touches it, there is no further movement there.

Q. You have been talking there about the bar D, have you not? A. The link C on the channel D, the contact at that point. Another reason would be that no designer, designing a machine of this kind, would use a channel bar several feet long, put on in that manner, just to create a stop at this point.

The Court: He would economize it a little more?

The Witness: Yes, he could make a good many stops out of such a bar as that.

Q. Do you know what the purpose of that bar was? A. That bar was put on to reinforce the entire length of the handle, to stiffen it against the twisting strain.

The Court: You mean that this other function was something that just developed accidentally, then, or had not been looked for?

The Witness: It just simply, when the handle was not found to be strong enough, letting this channel off in this position, adding that member to it stiffened it.

Mr. Corbett: The contention is, and I think it is clear from the patent, that the patent speaks of this interference being created purposely during the working range of the shovel. Now, our contention is that during the working range of the shovel there is no interference at all, no contact at all between the upper end of the link and that channel. That will make the matter clear, I believe.

Q. Please explain to the court the relation which the height of the mast and the length of the arm of the ditcher stick above the pivot has to this so-called problem of the blind spot. If you have any diagrams that illustrate that, it will be well to refer to them, and in referring to these diagrams, refer to the numbers or letters on them to get them into the record. A. When the dis-

tance represented by the mast from the pivot point to the bottom, to a pivot point here (indicating) is increased—

Q. Just give those numbers. A. The mast 1.

The Court: I suppose we can save a little time by adjourning now and putting those numbers on.

(Noon recess)

(Tuesday afternoon session, March 10, 1931)

Q. Restating the question put to you before lunch, please explain the effect of the relation of the height of the mast and the length of the upper arm of the ditcher stick, and state what that has to do with the so-called problem of the blind spot,—referring to any diagram you may care to use for illustration? A. This is chart 17. The mast is marked "1" here. The distance from this point to pivot 6 up to the center line of pull 7, is what is referred to as the height of the mast; and the distance from the upper end of the handle, from the point marked 9 to its upper end, is what is referred to as the upper end of the handle. In case this height was increased and this length here increased, the effect of either one or both together would be to delay the approach of the blind spot or make it more remote.

The Court: By that you mean it does not eliminate it, but makes it more unlikely in the use of the machine?

A. Yes, it would be more unlikely.

Q. Have you any knowledge as to the height of the mast in plaintiff's patented structure in comparison to the height of the mast in defendant's patented structure? A. I know that in the defendant's structure that this distance in height from point 6 to point 7 is 9 feet. In the plaintiff's machine there is some difference. In other words, there is a sheave lower down, and there is a hinge to the turntable up above, so that the line of pull is not from here to here, but from here to a point intermediate between those two; and my knowledge of that is that it is probably one foot more.

Q. Which one? A. That the Osgood is about one foot more than the Clutter.

Q. What about the comparative lengths of the upper arm of the ditcher stick in this second Downie patent, and the upper arm of the ditcher stick in defendant's structure? A. The length of the upper arm of the ditcher stick in defendant's structure is close to or nearly twice as much as in the Clutter patent.

Q. Have you any diagram which illustrates the two possible ways of avoiding the blind spot in the normal operation of the machine, and showing what steps or illustrating what steps were taken by Mr. Downie in an endeavor to avoid this blind spot, or avoid this intersection of the pivot point which you have discussed, which I understand is the same thing? A. This is chart 60, with two views. In the upper view, the step taken by Mr. Downie is the placing of the abutment or stop marked C, abutting at a point here on the pivot 7; and this illustrates the short upper arm.

Q. What illustrates the short upper arm? A. The A-B distance illustrates the short upper arm, that is, the distance between 7 and 14 in the line of the arm. In this view—

Q. Which view? A. The lower view, C-D, as against A-B in the upper one.

Q. What does C-D represent? A. C-D represents in this lower one the length of the upper portion of the arm above the pivot point at 2.

Q. You figure those upper arms from the axis of the pivot which connects the stick to the boom, from there to the axis of the pivot which connects the link to the upper end of the stick, is that right? A. No, sir, this case is parallel to the center line in this view.

Q. In which view? A. Both of them, the upper and lower views, the distance is taken on the center line. In this case, the angularity here—

Q. Which case? A. The lower view is shown as a direct line from the end of the handle without any stops having been placed, or without any interference; while the upper one shows that after the stops are placed, a diverted line similar to this.

Q. Which line? A. This line at the top.

Q. What does it indicate? A. It indicates the direction of pull from the pivot here 14 back through 17 and then down to the machine.

Q. What is the wording above the lead line which is directed to that line you just mentioned? A. It would be diverting the line of force. In the lower view, the same line would be a straight line of force.

Q. Would you say that Downie, in attempting to overcome this blind spot, has raised the elevation of his pull by sort of pulling around the corner there to give that more of a horizontal leverage; is that what you would say? A. Well, in effect, yes.

Q. And that is the occasion for this discussion regarding the bending of the line which included the hoist line and the link, is that right? A. Yes, sir.

Q. Once again in connection with the demonstrations of defendant's structure, will you state whether or not, in the raising of the scoop to the various elevations from 6 to 12 feet or so, whether or not there was any bend in that combined line formed by the hoisting line and the link which connected the sheave to the top of the ditcher stick; was there any bend in the line of defendant's structure? A. There was not.

Q. In the normal operation of the machine? A. There was not.

The Court: And if there was not, then you argue there was no necessity for you to adopt devices like that stop, is that right?

Mr. Corbett: That is right, Your Honor.

The Witness: Yes.

Mr. Corbett: I would like at this point, since the matter came up before lunch, to call your attention to one of the forms of the Byers structure which was held to infringe this stop patent. There were three forms, but in Plaintiff's Exhibit P-33, in the present case, you will note that the bend link has a distinct stop extending from its under side downwardly approximately towards the pivot of the stick in the boom. I just want to get that matter clear. It also appears probably a little more clearly in Plaintiff's Exhibit P-32. Of course perhaps it will clarify the matter a little—I believe our friends will agree to this, that this question of interference only occurs in the upper range of the structure, preliminary to dumping; is that your understanding, Mr. Richey?

Mr. Richey: That depends upon what you mean by the upper range.

Mr. Corbett: At least, you are not claiming it occurs during the digging stroke; it is after the bucket is unloaded.

Mr. Richey: I understand that is the important feature of it. The blind spot occurs during the loading.

Mr. Corbett: Yes.

Mr. Richey: I do not know whether it serves any utility at the other time or not.

Q. Have you read the deposition of George Wagner which has been filed in this suit? A. I have.

Q. Will you briefly explain what bearing that Wagner deposition has upon this question of this second

Downie patent? A. This is chart No. 42. This is a sketch showing the point of contact referred to and marked here B and was particularly brought out in the deposition of which you speak. Here are the upstanding members 17 and the bars 19, and here is the corner of the boom marked A, showing the point where these bars 19 intersect.

The Court: The corners of the bars marked what, A?

The Witness: No, I mean the arm or boom A, the corner of the boom marked A. This point here which is marked B.

Q. Your point is that at a certain portion of the cycle there was an interference there between the stick and the link? A. As shown here, when the handle got out byond the vertical, there would be this interference at B.

Q. Have you any knowledge of any other prior art back hoe structures where means exist for limiting the angular approach of the stick to the member which connects the hoisting line to the top of the stick? A. No, sir, I have not.

Q. What prior art patents, if any, show an interference between the line which connects the upper end of the stick and the stick; have you any prior patents bearing on that? A. I don't think they bear in the same relation as this.

Q. What do you mean by that? A. There are limitations on the travel of the bucket. In other words, the bucket has a certain distance to go and it will either come block to block or against a boom,—something of that kind. There would not be any angularity like this given in the picture at that point.

The Court: It would not cause that kind of a situation.

A. That would not be the kind of stop.

Q. I direct your attention to the patent to Hoffmyer and ask you to explain that patent with reference to that feature?

Mr. Richey: What is the number of that?

The Witness: 1,385,322. This line will come down and touch at 17 slightly. The line 24, in the maximum upward to the upper end of the handle marked 19 would in the instroke of the bucket where the top of the handle goes outward, come down and touch slightly at the point

17, which is on the highest portion of the boom. It would then divert the line of pull somewhat.

Mr. Corbett: To make this clear, Mr. Richey says the Hoffmyer patent was in the Cleveland suit; but in the Cleveland suit, the plaintiff, as we see it, was not seeking such a broad interpretation of its patent. It was not necessary for it to seek that interpretation in view of the fact that the Byers Company bucket was identical in appearance. Now they are attempting to broaden out the interpretation of this patent to cover any sort of interference. That is the way we see it.

The Court: You claim—

Mr. Corbett: We claim we do not have any interference in the operating cycle of the machine; we do not find it necessary to provide for it; it does not occur in the actual practice.

Mr. Richey: It says normal cycle or operating cycle.

Mr. Corbett: Your patent claims speak of it.

Q. You might consider the other patent cited by defendant's answer with reference to this patent, and briefly discuss any question of interference that occurs in any of those patents. Please give the patent number and name. A. You mean general interference?

Q. General interference, yes. A. In this first one we were just discussing, the stop there is on the bucket coming up as high as it can.

Q. Give the number? A. 1,385,322, the Hoffmyer.

The Court: That is not set out in your answer, this particular patent.

Mr. Corbett: Yes, it is, Your Honor.

The Witness: That would be one of those limiting it.

Q. Give the numerals you are referring to also; is that the patent you have discussed already? A. Yes, sir.

Q. Take the next one? A. Patent 1,056,268, J. Fairbanks. We have a triangular handle here for the scoop, marked 12. On the inner end is a hoisting line marked 22. At a certain place in the hoist-effect, this handle turns directly upward. At that point there can be no further cutting stroke to the bucket on the lower end. Here the hoisting machine starts on the same line. That would be the limit of stroke in that bucket. The bucket could not go any farther than the dirt.

Mr. Richey: That patent was in the Cleveland case.

The Court: Yes.

The Witness: 1,562,288, Burke. When the bucket 25 with the lower end of the handle 24 is pulled upwardly, as shown here—

Q. Showing what figure? A. When the bucket 25 is pulled upwardly to this dotted position which is not marked, there is shown above the bucket an enlargement of the hoist line which would interfere at the sheave on the side of the boom, not marked; in other words that would limit the travel of that bucket.

Q. Referring to the question of the use of sheave-carrying links at the top of a ditcher stick, or in this art generally, have you any patents in the prior art which show the extent of the use of this idea? A. In a general way, links such as you refer to are used in a great many different kinds of construction, like booms and derricks.

Q. Have you any patents that show that? A. There is one to Bishop which particularly shows the links at the top.

Q. Please refer to any other patents you have showing that feature of links? A. There are some others in the 11 that we discussed.

Q. Well, in any other patents cited in the answer.

Mr. Richey: What was the number of that Bishop patent?

The Court: 1,100,864.

The Witness: This is chart 14, showing a number of derricks of different forms. Here is the Bishop, 1,100,-864, and the links are marked 11.

Here is another construction, patent 1,064,120, and the links are marked 9. There appears to be another Bishop on this card.

Q. Give the number of it? A. 1,103,476, and the links are designated as G; and some others that have derricks.

Q. Do all those derricks show links with sheaves? A. They show links with sheaves in the end in the same way.

Q. Just give a list of the numbers and the names and dates of each of those patents? A. The first, to Bishop was 1,100,864, dated June 23, 1914.

The second one I refer to is Baser, 1,064,120, and the date is June 10, 1913.

Mr. Richey: That was in the Cleveland case.

The Court: So was Bishop.

Mr. Richey: That particular Bishop was.

Mr. Corbett: There are two Bishops. This is just to show the prevalence of the links in the art.

The Court: All right.

The Witness: The second Bishop I referred to was 1,103,467, patented July 14, 1914. Here is one we did not refer to.

Q. Give them all. A. No. 997,542, dated July 11, 1914.

Q. Whose is it? A. M. G. Bunnell. Here is another, C. E. Bathrick, 1,102,356, April 16, 1912.

Q. Have you got them all? A. I think that is all, yes.

Q. Were you present at the demonstration made by the plaintiff, made last week at the Samuel Davis Coal yard? A. I was, yes.

Q. Have you compared the machine and back hoe attachment used at that demonstration with the machines disclosed in patents to Clutter, and the second Downie patent involved in this suit? A. I have, yes.

Q. Please take each of these two patents to Clutter and Downie and briefly point out any features different between the machine and back hoe attachment of each patent and machine and back hoe attachment which was used in said demonstration.

Mr. Corbett: Your Honor, at this point I might say that we are trying, so far as possible, to confine this witness' testimony to the first Clutter patent and the second Downie; and we expect to have another witness to take up these other patents. We will avoid duplication as far as possible to keep them from covering the same ground.

The Witness: As between the machine which was demonstrated and the Downie patent and the Clutter patent, the first most important difference was that the digging attachment was mounted on a full revolving shovel, these both being the semi-swing arrangement. The bucket attachment is entirely different of course from the Clutter as shown here. The bucket is a drop bottom bucket.

The Court: It was not necessary to have that device on there they had on there before?

A. No, sir.

Mr. Corbett: Which device is that?

The Witness: In the Clutter; the bucket was just hinged at the rear and tripped down, and the demonstrated machine, it was like this one in the Downie.

Q. It was a drop bottom? A. It was a drop bottom. Of course there are no turn tables like these, shown in either of these.

Q. Like which? A. Like the one shown in Downie, at the top. Of course in this it was not shown, and that of course is done away with and taken care of with the mechanism that revolves the entire shovel.

Q. In that question of turn table, at this point, with respect to the difference between the turn table mechanism shown in the Clutter patent and Downie patent, is there a material difference in the amount of power that can be applied between the device shown in the patents and the device demonstrated? A. Yes, sir, very much so.

Q. Would that have any bearing on the question of the ability to twist the boom or stick laterally? A. Yes, sir.

Q. Just what bearing would it have? A. The power is a great deal more, and if you were up against a bank and twisting sideways, you would not have the easement there is in this type, where swinging with a rope from the top, that can give and bend away out of line. In other words, your machine will pass on without pulling on the handle structure. The boom can remain back. There is another difference here I note in that machine, particularly in the matter of the handle.

Q. In the dipper stick? A. In the dipper stick. In both of these practically the same distance is shown here on the machines of this type.

Q. Both of the Clutter and Downie patents? A. Both the Clutter and Downie patents. On the machine demonstrated, instead of any bars coming down on the sides of the handle in this respect—

Q. You mean straddling the handle? A. Straddling the handle, they come down above the handle. In other words, this pivot 14 was raised very much higher than shown here.

Q. Shown in these patents? A. Shown in these patents, so that the bar came across the head of the stick; and the contact point or stops noted here as 23 were not here, or in other words they were not such contacts as this at all.

Q. You mean they were not used in the demonstration apparatus? A. No, sir, they were not. These bars coming across the top contacted with a small spot on the rear edge of the handle here.

Q. What was the effect of having that arm bearing on the top? A. The effect of that would be an increase in the upper arm length, in this respect, differently from this; where the forward arm which is increased would pass around to such a part of the arc, it would begin to lose its leverage or effectiveness. The second point in the rear would be coming up in position.

Q. Would it not increase the leverage very materially? A. The length of the arm and the leverage.

Q. Would you say that that was a substantial departure from the idea of having a short arm with stops to avoid a blind spot, and to give a better angle of pull? A. Yes, sir, I would say it was.

Q. Have you any knowledge from your own experience as to the practice prevalent to the filing date of the Clutter patent in suit with respect to the customary manner of closing the door of the bucket of the scoop or excavating shovel? If so, please state what you know about it? A. All doors on shovels from the time shovels have been first built have been specially arranged with such hinged construction that they will fall or drop shut before the bucket comes back to a vertical position.

Q. Can you show that hinged construction to the court? What chart are you referring to? A. This is chart No. 2.

Q. Put it upon the easel.

The Witness: Chart No. 2; this is the bucket, not marked, but in blue. Now in all shovels, whether this bucket works inwardly or outwardly, hinges are brought around on the back side. In other words, the center line of gravity is down through this way. You do not have to come back to vertical. That door will swing forward. The operators just slip those doors shut. In other words, it is not necessary to come away back past the vertical every time to get the doors shut, especially in the larger size shovels. There would be a large loss of time. You must shut your doors while up there. Just a slight motion in or out on the handle quickly will start that door. It will shut.

Q. Have you heard and understood the claims made by plaintiff's witnesses as to the capability of plaintiff's machine in undercutting? A. I have, yes.

Q. Please state what knowledge you have that may throw any light upon the practicability or desirability of this so-called undercutting? A. The undercutting we have been discussing is a matter of practicability, as I take it. The contractor wants to keep the machine busy, at its capacity. I have seen places where trenches have been diverted to one side a trifle and a pipe laid so as to put it back in the proper way. It is a slow process, and after you are done, you have just gained a little place at the bottom in which you can push the pipe. If the machine were carried ahead to its full capacity, it would do the work of a good many men. The machine might do it, but you would have to commence higher up and do it all the way down. You could not have many jacks in there. It would be a slow process. It would be accomplishing very little.

The Court: In other words, that kind of machine is too valuable for that, is that right?

The Witness: That is it.

Q. You have seen defendant's machine. Is there anything about defendant's construction that indicates whether or not those machines were designed to permit this twisting of the boom to effect this undercutting action?

Mr. Corbett: Your Honor, I want to say at this point that there has been so much more or less cloudy talk about the defendant's machines, and what these things will do, that I have had a machine shipped here. Some time in the near future, probably tomorrow, we would like to demonstrate the defendant's machines, both, so you can get a clear idea of structure; also Your Honor can get a better idea of this problem of dumping and how it may be done—if that is agreeable to you.

The Court: All right.

(Question read.)

A. No, sir, there is not. On the other hand there is plain evidence that rigidity and stiffness have been sought rather than flexibility, so far as twisting. To illustrate, the boom at the bottom where it pivots in instead of being straight all of the way, has been widened out and meets the machine at a socket of considerable width.

The Court: Could you not twist it farther out away from the machines?

The Witness: No. The beams are I-beams, spaced widely apart and tied together, with the thought of keeping that thickness all the way out. There is also a varying between the handle and the boom, with the same thought.

Mr. Corbett: Your Honor, I think the sight of that machine will show you conclusively about that question of twisting.

(Narrative continued.) I do not find anything in the drawing, description or claims of the Clutter patent in suit which indicates whether or not the ditcher stick could be moved upwardly into substantial alignment with the abutment in the digging cycle of operation. I would say the short upper arm, the pivot point up would prevent this alignment. I am speaking about the Clutter machine. In order to point out more definitely I mean I will take this diagram of the Clutter patent and illustrate what I have in mind. The method here in which the pulling line 21 is attached to the boom and the handle it supports 19-C (referring to chart No. 66) holding the sheave and chain in a fixed relation to the boom, and the arrangement of these bars 19 passing on up would prevent complete full reversal or inversion in line with the boom. I have referred to these upstanding members as 19-B. I believe the correct number is 17.

When I testified about the use of the King machine in the phosphate fields of Florida and South Carolina this morning some question was raised about my knowledge of this machine. At the time the King machine was being produced in the Marion shops, during that period I was in charge of an electric light and power and speed railroad. I was in those shops almost every day and met Mr. King in there and two or three other stockholders. I saw these machines that we have been discussing. This King patent was being developed and tested out in the yard. That is when I first learned there was a special use some place for a machine of that type. From Mr. King I gained the knowledge that they were going to use this machine on the phosphate work. I was familiar with the machine structure at that time.

The Court: Do you know personally of the character of this digging of phosphate? How does phosphate compare with other things?

The Witness: It would be classed as tough; in other words, a material that has no cleavage, no seams. Any-

thing tough can be shot if it needs to be; but there is no place where it will just pull apart in even layers. That is the idea of the material.

(Narrative continued.) It was not novel with LeRoy Clutter or Downie to produce an excavator that would cut a ditch or trench the width of the bucket only. Out-stroke shovels have been used for a great many years in cutting trenches and cutting them the width of the bucket. Then we have here in these references E. O. Rood and C. W. Rood. The Webber machine 528,312, patented October 30, 1894, is one that I had in mind that could do that.

The Court: Could do what?

The Witness: Make a trench the single width of the bucket. The King, 579,589, March 30, 1897, will do the same thing. The Mahoney, 1,194,204, would make a trench the width of the bucket. Fairbanks, 1,056,268, March 18, 1913, would make a single width trench with the bucket.

Mr. Corbett: That is enough.

(Narrative continued.). It was not novel with LeRoy P. Clutter or Downie to provide a machine of such a nature that various digging attachments were interchangeable on the same power plant or machine proper. Prior to Clutter or Downie developments all out-stroke shovels since they have been built in revolving form, have all carried different attachments; and a great many years before that, the larger ones, 18 or 20 years ago, had the drag line attachment on the boom, where they got their out-stroke taken off. That has been done with some of these very big machines built for 18 or 20 years. Vulcan and King both represent that. They took off the outstroke attachment and put on this instroke, just turned the bucket around. When they got through with that work, they took it off and put the outstroke attachment on.

It was not novel with LeRoy Clutter or Downie at the time the Clutter application and the second Downie application were filed to provide a machine whereby the digging was controlled by two lines. This feature is shown in the Fairbank's machine, and the Mahoney machine; the E. O. Rood and C. W. Rood machines show this.

Q. Have you any charts of these patents or devices you can show? I would like to have that two-line proposition cleared up.

The Court: You are referring now to the operation up to the time of unloading?

Mr. Corbett: Yes, I am referring to the actual digging operation.

The Court: Getting ready to unload?

Mr. Corbett: Yes, getting ready to unload; in other words heading the shovel out, digging and pulling it out.

The Court: Up to the unloading?

Mr. Corbett: Yes, not including the swinging. It is the claim of these plaintiffs and I think they will agree with me, that it was new with Clutter or Downie to provide two lines for controlling the motion out to dig, the downward motion in digging, and the bringing of the shovel up without regard to the swinging. Is that your contention?

Mr. Richey: We do not claim that much in this construction here. Clutter was the first fellow that controlled with two lines, like you drive a horse, so you can change direction at any time.

Mr. Corbett: You mean swinging?

Mr. Richey: This fellow here had the combined hoist and haul line. They were combined together. When he started to pull through, he had to complete; he could not go back; if he started to turn the horse to the right, he could not change his mind and turn him back again. Now there are these two men, Fairbanks and Rood. They were in the other case. The same contention was made there, that they were two lines; but the two lines do not function the same way. We claim that Clutter was the first man who had this ability to move the scoops in any one of four directions at any time,—just as Judge Simonds said in the opinion of the Circuit Court of Appeals: He was never hide-bound, or committed, to continue through once he started.

The Court: He could change his mind at any point?

Mr. Richey: Yes, he could change his mind at any point. It gave him dexterity in handling the scoop, and versatility in moving it any place he wanted. The four directions were up and down and in and out, any direction in the plane in which he was digging.

Mr. Corbett: I think it would not be a bad idea to strip this case of these glittering generalities at this point. I would like to find out what is your contention. Is it your contention that Clutter was the first to be able to perform the reaching out of the scoop and the digging in and pulling in of the scoop, and the elevation

up to the point of turning by the use of two lines? He was the first to do that?

Mr. Richey: I can go over that again for you, if you want me to.

Mr. Corbett: Suppose you do go over it again.

Mr. Richey: In this construction there are two lines in opposition to each other, just the same as the two reins on a horse. I can change that any time I want to in any direction, don't you see, like you can when guiding a horse; can set it down, pull it up, and put in any of those combinations you want to.

Mr. Corbett: Driving a horse means turning him to the side; you do not mean that.

Mr. Richey: Let us assume the horse is in horizontal; of course that is what I meant; I can change that any time I want to in any direction. If I was to take this line, combine those two lines, so that when I started to pull through, like that man Fairbanks, I got half a load of dirt the first time, I could not go back without dumping that; I would have to keep on going through once I was started and I would be committed to that direction. It is the same thing with the Rood constructions; that is what the evidence showed. That is what we mean by moving it in any way, any time, in any direction you want in the plane; that gives you the ability to strike where you please, go back and finish up your load, and do all of those functions.

Mr. Corbett: Then I would like to have the witness answer my question with that understanding.

The Court: All right.

The Witness: I will refer you first to Defendant's Exhibit 31, in the deposition of Mitchell.

The Court: Whose deposition?

The Witness: Deposition of William Mitchell of the Fairbanks machine. This is the Fairbanks machine, the same structure as shown on the card; and there are two lines on it, just two lines, one attached to the upper end of this triangular handle, and the other to the rear or opposite angle as it stands there.

Q. You can mark those with letters.

The Court: Your claim, in a couple of words, is, Mr. Richey, while those have two lines, they do not perform the function your two lines do?

Mr. Richey: That is it, yes.

The Court: Yours is more human.

Mr. Richey: Yes, that is right.

The Court: All right; just so I get the line of thought.

The Witness: There are two lines: One I have marked 1, and one I have marked 2; and there is a triangular-shaped handle made up of these bars marked 4; and there is the bucket or scoop somewhat differently shaped from any of these scoops we have been considering. That I have marked 3. Then there is a short piece of line which appears slack here, marked 5. In the operation of this machine I will say this: This shows the bucket in its inward stroke after it is filled and raised up. In other words, we are up here as high as we can go. In this position it has been pulled forward into the work by the line marked 2, pulling it forward into the work; pulling it forward into the work does not necessarily mean it has to go on through. There is another line on the back end of the handle. That can be operated to pull it back out of the work if that is desired or if it was not filled up; and that line marked 1 would do that if the operator wished to do that. There is nothing compelling him after he started to keep pulling it through clear to the top before he can reverse and go back and get another load. He can continue working it back and forth like that. This short line is attached to the back, in this bucket—sometimes called as a gait; that gait, when loaded, is backed against the back end of the bucket, pushed back there when this particular form of scoop was first pulled to the work. After getting up to this point and swinging out to the dump—of course these two lines are not called to function at all—the operation of dumping would simply be to hold on this line, hold on the upper line and ease out on this one. The result will be that the weight on here brings this up; that goes down; that takes the scoop back in this relation; but at a certain point in this line, having been set properly for that, it becomes taut and the back of the scoop does not travel; it just stops here; the bucket goes right on. That is the way the dumping is effected.

Mr. Richey: You are testifying how you think this might operate; not how it was operated; you did not see it operated?

The Witness: No.

Mr. Richey: Just say in your opinion it can be operated this way, instead of saying it was operated that way.

The Witness: The deposition I have read says this machine was used, and if it was used to dig ditches, it must have been operated.

Mr. Richey: I have no objection to your saying how you think it can operate; but when you say it did operate, just do not say that unless you know it of your own knowledge.

Mr. Corbett: If the machine is capable of doing this; that is the point.

Q. Will you take the Rood device and the Mahoney device and explain that question of two line control? A. This is the E. O. Rood device, No. 386,438, July 17, 1888. Here we have the handle marked 13, pivoted in the end of the boom, near the end marked 6. We have two lines, one marked 16, which is attached to the upper end of the handle, or near the upper end of the handle marked 13, and coming down and passing under the sheave to the handle; and we have another line attached to the front of the bucket. That is this line marked 22. Those are the only lines attached to the handle or the bucket. In this chart the bucket is shown in its outward position or dump position, or empty ready to enter the work, and is being held out there by the line 16, which is drawn down to this position—

Q. What position? A. The position shown in the chart here; and with this line, the boom and the handle in that position, and the bucket in that position, let down into contact with the work; and then the line 22, attached to the front of the bucket, would be used to draw it around to this dotted position, this upper line 16 released and paying out; in other words, one line is coming in and the other is going out; one cannot come in unless the other does go out; that would bring it into a position like this, which loads it. In that case the line 22 right in here at this point—there is no mark there—passes through the boom, will take the boom and bucket up, hoist it. This same movement I have described before actuating it here above, over the dump, will invert that bucket to empty it.

Q. Have you ever seen this device in operation? A. I have seen a number of these machines in operation, yes.

Q. Have you finished your description? A. I think that is all.

(Narrative continued.) I now take up the device of Mahoney patent 1,194,204, dated August 8, 1916. Here is the line marked 50, attached to the bucket marked 38, and line marked 44 attached to the upper end of the handle. In filling this bucket, the line 50 draws in, and at any point after that is drawn in far enough to fill it. The line 44 raises the handle, bucket and the boom, and there is again that same idea of two lines, one holding it on the bucket and one letting out on it while the other hoists up.

Comparing the spotting range of this Mahoney device with the device of the Clutter patent the difference that I see here in the spotting range of this Mahoney machine and the Clutter, is shown here where the bucket 38 is pivoted at the lower end of the handle, with the idea of having all of the weight and more of the load to the rear, so that when the bucket is filled and lifted, you tip down. The closed end would tip down; that would continue to stay in that position while it was being hoisted up. When elevated out of the work, it would tilt the heavy end down, and then it would be carried out this way, away from the machine with the upper rope. The bucket would be canted downward at the heavy end, and as this handle passed beyond the vertical, the action of the extra weight would still cant it down; and that could be carried out as far as it is necessary to dump, or as far as the line would pull it. It would still be in that position. Nothing has happened to turn it over yet.

With Clutter, the bucket is rigid. Whenever the handle comes to a vertical position, the bucket is horizontal. If the material is loose material, some of it could commence to discharge. As it goes on, it inverts and the balance would be discharged. If you used a latch type, the same thing would happen if you did not latch it at the vertical point.

I know of the Paige construction in which the bucket is mounted on the lower end of the ditcher stick. The Paige bucket is pivoted. It is a fact that these back-hoe shovels are still being used in which pivoted buckets are mounted on the lower end of the ditcher stick and swing freely.

Q. In view of the prior art and depositions offered in evidence from your own knowledge and experience was it novel with LeRoy Clutter or Downie to provide a machine that would pick or break into hard ground?

Mr. Richey: I don't like to object but it seems to me all these are questions which the court must decide.

Mr. Corbett: I want to get the art before him so he can decide.

Q. Will you produce any patents or refer to any devices that illustrate whether or not machines prior to Clutter and Downie were capable of picking or breaking into hard ground?

The Witness: C. W. Rood, 1,057,457, April 1, 1913.

Mr. Richey: That was in the Cleveland case was it not?

The Witness: In this machine, the bucket in blue marked F is shown with the cutting edge directly downward and vertically suspended, and the arms are shown folded back. These two arms in yellow marked G in position, if let down, it would strike the blow. It was intended to use it that way.

The Court: Would there be any other force behind that except the weight of the shovel itself?

A. There would be the force of the handle through these members pinned in here at g. In other words, that is a straight thrust member there in that position; push the bucket right down with the handle coming back of that stroke.

E. O. Rood, 386,438, July 17, 1888. Here the bucket blue B is extended outwardly ready for the downstroke into the work, and the cutting edge directly downward, cutting out on the line 18 would let that bucket down directly into the work. In other words, if it were winched to let it down heavily, it would come down with part of the weight of the arm on it, and strike directly on its point, the cutting edge.

The Court: Part of the weight of the boom and the stick?

The Witness: Part of the weight of the boom and the stick, held in that position. It is let out right here.

Q. Which line? A. This is line 16.

G. W. King, 579,589, the bucket in Blue M is not shown on this chart in the position in which it would strike the blow. In the operation of this machine when the bucket M is pulled up to the hoisting point, a pivot out here.

Q. Out where? A. Pivoted out here at the end of the boom, at a p[illegible], I think it is K.

Q. At the end of the boom, is it not? A. At the end of the boom is let down, comes back through a long swinging arc. There is nothing to hold it once this line keeps paying out. Checking this line stops it out here at a considerable angle. It brings these teeth in a downward position at that point somewhat close to the work; and then it is let in and would strike into the work, if it was let down.

Q. Strikes into the work on an angle? A. Strikes into the work on an angle.

Q. How about the Vulcan machine? Was that capable of picking or digging into hard ground? A. Just in the same relation as this one would be.

Q. Which one? A. The G. W. King patent.

Q. How about the Mahoney device? Could that be used for digging or picking into hard ground? A. Mahoney patent, 1,194,204, August 8th, 1916, the bucket here is shown, 38, is shown down inward loading, not in position to strike a blow; but if the handle marked 40 was extended out in the position where it is when it comes back over the work; it has been out to dump, and the bucket was turned upwardly through this line here.

Q. What number? A. Line 34; brought down so the teeth would strike, it could be made to strike a blow of that kind; or would if that were the desirable or reasonable way in which to use the machine.

Q. How many of these back hoes prior to the Clutter device have you seen in patents in defendant's answer, patents or other devices? About how many of them have you looked over or examined? A. We had eleven here.

Q. We showed eleven—how many more—how many altogether? A. 24—something like that.

Q. Did all of these back hoe devices remain on solid ground as the excavation progressed, rather than astride or over the wall of the ditch or the trench? A. Yes, they all remained above the work.

Q. Something was said here about the use of the term "pawing". Will you explain briefly what that means and point out whether or not it could be performed with prior art devices as shown in these patents or in the depositions? A. Pawing is an expression somewhat new to me in the operation of shovels or hoes; but I take it it means a short stroke, a scraping stroke, that is, you come in just a slight distance and slip out again, —I imagine something like a horse's pawing.

Q. That could be done with the E. O. Rood machine? A. Yes, sir.

Q. As shown in chart 1? A. Chart 1, this bucket marked B comes down into the work in that position, which is the normal position it goes to the work. The stroke was just started a short distance; and then the other line was put into operation; and it was brought back again. It might be raised slightly by the other line and then come back and come in again, and not continue right on through with the full stroke. That is what I understand by pawing. It could be done with that machine.

Q. You have had considerable experience with drag line machines, have you? A. Yes, sir.

Q. Can a drag line machine operate in soil containing rocks, rocky soil; not solid rock, but rocky soil? A. A drag line machine can be operated in seamy or loose material, where there is opportunity for the teeth to rip up the work in layers. It could not in solid rock. But if the work was blasted properly, a drag line bucket would enter into that kind of material and fill.

Q. It will operate in blasted rock? A. It will operate in blasted rock, and that is done with drag line buckets.

Q. A little while ago I spoke to you about the Paige shovel attachment, recently advertised in a Paige catalog. I hand you a copy of a Paige catalog and ask you to refer to one of the figures and explain briefly to the court the structure of this device?

Mr. Richey: Objection. That is immaterial. That is not prior art.

Mr. Corbett: No,—just illustrating what can be done with shovels, and the fact that the pivoted scoop is still a practical proposition.

Mr. Richey: What has that to do with this case?

Mr. Corbett: In your cross examination you made considerable of the fact that the Mahoney scoop was pivoted.

Mr. Richey: You say I did or I am going to?

Mr. Corbett: You have, in the depositions, if I am not mistaken.

Mr. Richey: I still object to it. There must be some limit to what we put in this case, it seems to me.

Mr. Corbett: It is not a prior art structure. Your Honor will see that. But it is an indication of what is and what is not practical; and considerable has been said

in the Cleveland case about fixed presentation, the importance of it.

The Court: Put it in in a few questions.

Mr. Corbett: I just wanted to explain it briefly, Your Honor.

The Court: You will want it for your record anyway.

(Question read.)

The Witness: The bucket shown on this device is equivalent to or exactly similar to the Paige drag line bucket, that is, the bucket made by the Paige Engineering Company, and the original drag line patents were taken out by a man by the name of Paige. Here a bucket of that kind, instead of being free, as they are usually, is carried out hoisted on one line, and the other, and is guided and held by the end of the handle.

Q. That is a back hoe device? A. It becomes a back stroke device. At the same time it is pivoted and is free to raise; that is, in coming through the work, pivoted here at the forward end, the back end may rise the same way it would in regular drag line work.

(Narrative continued.) As to my experience with various types of excavating machines and to what extent they will handle hard material and further as to the kind of materials they are usually designed to handle, I will say that in the use of any kind of excavating machinery, whenever the work or the material encountered will slow down the output of the machine, if the material is seamy, loose enough, there is no great retarding effect in output, and it is common practice to continue to operate the machine without blasting. Whenever the material becomes hard enough, it is considerably like the idea of stopping to undercut with the machine. The machine must be kept in its full capacity of output. Then shooting comes in. On the work without larger shovels we find that necessary. We could keep on and get out half as much, but if we did that it would cut the capacity down; there would be nothing left in the value of the material recovered; and we would also have very numerous breakages when we attempted to do that.

The Court: Breaking of the shovel?

The Witness: Breaking of the heavy frame parts that cannot be quickly repaired. One is never able to fully figure the loss until the end of the year, when it is

too late. We blast for that kind of work. Even blasting may be done and not be effective; it may be done poorly and not in a manner which would be of aid. Several of the larger companies are doing this work today and have built and operated their own explosive plants so that they do not take any chance on the poor effects of blasting.

The machines I have had charge of first came out 17 or 18 years ago on the market. They were very, very large and very strong. When I arrived down there on that work, I found, unfortunately, that information had gotten among the operators and the foremen that these machines were so large they could just dig anything. There was very indefinite and little shooting done. A check-up showed our trouble was instead of stopping that at once they were experimenting with the large machines. With the larger machines, those brought out in the last four years, there is no thought even with those machines that they will dig rock. The companies have put in their own explosive plants and produced liquid air to break this up.

The Court: Your point is that it is not practical because it is not economical?

The Witness: It is not practical because it is not economical.

The Court: All right.

Mr. Corbett: I would like to say, on behalf of the Osgood Company, I would like to reserve the right to place Mr. Turner back on the stand after the showing of this machine out there, if anything makes that necessary.

The Court: I see no objection to that.

Mr. Richey: There is no objection to that.

Direct Examination by Mr. Reed.

I am familiar with the machines of both defendants here. I have observed the General Excavator machine that is, the back-hoe in operation, digging and dumping. In the General Excavator machine I did not find anything either in appearance or purpose, which corresponded to the upright member or support 17 of the Clutter patent here in suit.

In the General Excavator machine with the back-hoe attachment I did not observe any interference between the ditcher stick and the link at the upper end in any range of normal work. The situation as to this is

practically the same as it was in connection with the Osgood machine. The difference between the link construction and arrangement of the General Excavator machine from the Osgood machine is that in the General Excavator machine instead of there being two of these links at the top like in the Osgood passing down on the outside there is only one link or bar which passes through the link coming down in a slot. I do not believe that the slot was intended to act as a stop or abutment in the manner similar to the stops or abutments 23 and 24 of the second Downie patent. The slot is cut out roughly, burned out, and the bottom of it is left square with the center line of the handle. If the bar came down and contacted with it, it would not contact with the flat surface for any considerable distance at all. It would be a corner contact. It would appear to me that if it was intended for that purpose it would have been cut out on the same angle at which the bar would take when it contacted, and it would seem obvious the bar would have been made wider by some method.

The Court: Does it perform the same functions?

A. Not in any normal working range, it does not contact.

(Narrative continued.) The relationship between the General Excavator and plaintiff's patented machine as to the length of the upper arm of the ditcher stick, is substantially the same as that between the Osgood and plaintiff's machine.

Mr. Reed: That will be all.

Mr. Mahoney: If Your Honor please, we want to reserve the right, before we close our case, to offer in evidence any of these charts. We will consider these charts and put them in evidence before our testimony closes.

The Court: I guess there is no objection to any of them.

Mr. Mahoney: We want to consider the shovels we may want to put in. We will let you know before we close our case.

The Court: All right.

Mr. Mahoney: I also want to offer in evidence this Paige Drag Shovel Circular.

The Court: I will just withhold my ruling on that.

Mr. Mahoney: We will offer that in evidence and Your Honor may make your ruling on it later.

Mr. Richey: I will note my objection to that.

Mr. Mahoney: In evidence as Defendant's Exhibit No. 63.

And at this time we want to offer in evidence certified copies of the file wrappers and contents of the patents of the plaintiffs in suit here; that is, the file wrapper and all of the papers referring to prosecution of the case in the Patent Office, certified by the Commissioner of Patents as correct and true copies.

The Court: Any objection, Mr. Richey?

Mr. Richey: No. How many of the patents in suit?

Mr. Mahoney: All that are sued upon.

Mr. Richey: I think we are going to withdraw two of the patents. Mr. Reed and I have been talking about it back and forth. We have pretty near reached an agreement about that. I shall be prepared in the morning to say.

The Court: You have not settled the rest of the case?

Mr. Richey: No.

Mr. Mahoney: And a certified copy of file wrapper of the Clutter Patent 1,317,431 is offered in evidence as Defendant's Exhibit 64.

A certified copy of the file wrapper and contents of the Robert Rex Downie Patent 1,511,114, dated October 7, 1924, is offered in evidence as Defendants' Exhibit 65.

A certified copy of the file wrapper and contents of Robert Rex Downie Patent 1,709,466, dated April 16, 1929, is hereby offered in evidence as Defendants' Exhibit 66.

A certified copy of the file wrapper and contents of Robert Rex Downie Patent 1,543,250, dated June 23, 1925, is hereby offered in evidence as Defendants' Exhibit 67.

The chart which was marked for identification as Defendants' Exhibit 61 during the plaintiff's case, but not offered in evidence, is now offered in evidence as Defendants' Exhibit 61.

The Court: Any objection, Mr. Richey.

Mr. Richey: Except it is immaterial; that is all.

The Court: Which one is that?

Mr. Mahoney: That was a sketch made of the machine at the demonstration, a pencil sketch.

The Court: All right. It is admitted.

Mr. Mahoney: That is all at this time I believe.

Cross Examination by Mr. Richey.

Q. Mr. Turner, you said, I believe, there were twenty-four prior patents in machines referred to in the answer which show the back hoe; I presume those you have picked out and discussed here you consider to be the pick of the twenty-four? A. I don't know whether they are or not.

Q. You regarded those that you have discussed as coming nearer to the Clutter machine than those you did not discuss, did you not? A. I think possibly, yes.

Q. Which of those you have discussed here—and that includes the patents and machines said to have been used—do you consider to be the most like the Clutter? A. I think the Downie would be most like the Clutter.

Q. I mean the prior art patents, of course; the Downie is not a prior art patent, is it? A. No, sir. The Rood would be one that would be, in the prior art.

Q. That is the one shown by Rood Patent 386,438, of 1888? A. The old Rood.

Q. Is the one, is it not? A. Yes, sir.

Q. This Paige machine you discussed here; have you ever seen one of those? A. No, sir.

Q. You have never seen one operate, of course? A. Never seen one operate.

Q. You do not know when it was brought out, do you? A. I don't know.

Q. It was within very recent years? A. I think so; I don't know that.

Q. You spoke of this South Carolina bone or rock. Have you ever seen any of those beds?

The Court: You mean phosphate?

Q. Yes. A. Not those beds; but I have seen phosphate.

Q. Where did you see phosphate? A. Commercial phosphate, I have seen it.

Q. You have seen it ground up for fertilizer? A. Seen it in bulk.

Q. You never saw any of it as it is deposited in South Carolina and Florida? A. No, sir.

Q. It is used for making fertilizer? A. Yes, sir.

Q. They grind it up and sell it for fertilizer? A. Yes, sir.

Q. Have you seen any of the recently made Osgood machines? A. I have.

(Narrative continued.) I don't know of any changes in those machines over the first machines with respect to the relation between the link and the upper end of the angle iron that runs along the stick which engages the link. I have seen more recent General machines. I do not know of any change in the relation between the link and the shoulder or edge on the stick that engages it, over the first General machine.

Q. You discussed several Mahoney machines here, one shown in the Mahoney patent, which one of those machines do you consider to be the nearest like the Clutter construction? A. I don't believe I understand your question.

(Question read.)

A. I only discussed one Mahoney.

Q. Did you not discuss Exhibit 4, the one in the cornfield? A. You mean individual machines?

Q. Yes? A. Oh, yes.

Q. Which one do you consider to be the nearest like Clutter, the one in the patent or the one in the cornfield? A. I don't think there is any great difference between them.

Q. One of them had a stick or spar on the back of the bucket that ran up alongside the ditcher stick? A. Yes, sir.

Q. That was the one in the cornfield? A. Yes, sir.

Q. You did not find that in the one in the patent, did you? A. No, sir, that is not in the patent.

Q. Having that difference in mind, if no other, which one do you consider to be nearest like the Clutter? A. The one in the patent.

Q. Which of the prior art patents or machines you have discussed here do you consider to be nearest like the machine in the Second Downie Patent? A. I don't know that I can select any one.

Q. You have mentioned Hoffmaier and two or three others. Can you select one of those? A. You mean in relation to the Second Downie Patent in relation to stops?

Q. Yes? A. The Hoffmaier would be one; but not with any particular stops.

Q. But you consider that to be the nearest like? A. There are no stops mentioned in that.

Q. But that is nearer like the stop feature of the Second Downie Patent than any of the other prior art patents you discussed, in your opinion? A. No, sir, I don't know that it would be; there are other machines in those prior art patents that had some limitations.

Q. My question is, which one do you consider to be nearest like the Downie? A. As far as stops are concerned, there are none of them have a stop like the Downie put some place to have that angularity. None of them have that.

Q. But there must be one better than the balance? A. In that relationship there would not be in that particular point.

Q. Will you look at this Chart 17, the drawing of the Mahoney? I notice you have changed the position of the parts with respect to the Mahoney patent, is that right? A. I don't know that that is right.

Q. In the Mahoney patent the bucket was on the ground, was it not?

The Court: You mean the patent office drawing?

Mr. Richey: Yes.

Q. You have raised the boom, have you not? A. Yes, sir, in relation to this.

Q. In relation to the drawing of the patent? A. Yes, sir.

Q. There is a slack shown in the green line, is there not? A. Yes, sir.

Q. And if that were shown correctly, the bottom would drop down to take up the slack, would it not? A. Yes, sir.

Q. And the only way you could then bring it to the position shown in this Chart 17 would be to pull on that green line? A. Raise the green line.

Q. That is, you control the direction of the mouth of the bucket at all times with the green line? A. It would be necessary in that, yes, to raise it with the green line.

Q. So that, in addition to performing the function of dumping, that green line also performs the function of directing the mouth of the bucket? A. It would.

Q. And if you wanted to change the direction of the mouth of the bucket at any time, you would have to pull on the green line? A. You would.

Q. The green line in this chart corresponds to the line 44 in the Mahoney patent, does it not? A. Yes, sir.

Q. That is, the green line in the chart is numbered 44 in the Mahoney patent? A. Not the green line.

Q. I beg your pardon—34? A. Yes, sir.

Q. That green line is run by power, is it not, that line 34? A. It is.

Q. And of course the other two lines there shown in the patent at 44 and 50 were also run by power? A. They were.

Q. What is the member C in the Rood Patent 386,434, do you know? A. The member C is a strut.

Q. Do you know what that is for? A. Yes, sir.

Q. What is it for? A. It was used to exert some holding down effect on the boom.

Q. To keep the boom from rising when they pulled the bucket through? A. That is my supposition. In this view I cannot see how it would hold there.

Q. In this view you cannot see? A. No, sir.

Q. In this Sweet Patent 120,830, there is a line 7 to 1, a line 84 and a line 87, all three of which are controlled by power, are they not? A. They are.

Q. In the King patent the boom is stationary as far as moving vertical is concerned, is it not? A. It is.

Q. And the bucket, the only way you could swing the bucket beyond vertical would be by a pendulum swing? A. It would.

Q. It operated by running the stick up and down at the end of the spars, did it not, and swinging it in? A. It was adjusted.

Q. How was that operated, whatever you chose to call it? A. This chain was carried around a sprocket here.

Q. And how was that adjusted or operated, whichever you call it? A. This chain is carried around the stroke here (indicating). That center on this shaft, the pinion engages the rack on the handle the same way as standard shovels, and that would just take and hold it in different positions. I beg pardon there—the first question is not fully answered. This is a brake mechanism; it is not a power mechanism.

Mr. Corbett: Give the number of that.

The Witness: It is marked Q, I think, and probably S; there are two there. Now, this chain would be driven around this by the oscillation of this; in other words, when you get here (indicating), it would reach

back and then if you care to brake, or if you get it when it was out here, the chain acts to hold it in this position, so it would pivot there, but in the other outstroke that is really a driving stroke.

(Narrative continued.) Now, by a standard machine, I mean an ordinary steam shovel. In similar mechanism, this would be totally different. In other words, it is just an ordinary steam shovel turned around as far as this part. The machine of the Webber patent works practically the same. As to whether that would apply to both Webber machines, that is, whether it would make any difference whether this boom was curved or angular I would say that wouldn't have anything to do with it. This is a brake attachment, the same as the other, using a rack and pinion to hold it, whichever way it was to run, and hold it there. As to whether it would have control beyond the triangle just the pendulum swing, I would say that after you had the pendulum swing and the bucket catches out here in the work, that would be closed the same way. The object is to make a full arc; the object is to hold it; after it has come back like this, if it is not held by brake, and it would come on hard material, instead of making an arc it would go up a horizontal line. If that was hard material, it would pull just like an arc shovel, to make it dig in. Referring to this Exhibit 34, the link engages the upper corner of the boom, that is, the engagement is not between the ditcher stick and the link but between the link and the boom.

The Court: That is defendants' 34?

Mr. Richey: Yes.

(Narrative continued.) That is the same construction in this chart 42. Referring to the second Downie patent the functions of these abutments would be the same if the abutments were made all in one piece, that is all through the operation I mean, the relative location in there. The same thing would be true of the abutments on the stick. The function would be the same whether integral or separate.

In this Mahoney cornfield machine there is a hand tripping line in addition to the three power lines. I don't think in the machines of the Clutter and Downie patents that the trip line would be operated at all where the material was dumped through the mouth of the scoop, and there would be only two power lines to operate.

The Court: You mean when you didn't use the drop bottom?

Mr. Richey: Yes, sir, or don't trip the Clutter bucket.

(Narrative continued.) The only time you have to operate the trip lines is after the scoop is placed; then a man just pulls the trip line, that would be their idea. In both the drop bottom and the Clutter machine that would be the practice.

Q. You spoke of the cross link 17 in the Clutter patent. Do you find that that link is recited in claim 4 of the Clutter patent as you read claim 4? A. You say a cross link?

Q. Yes, this one here, 17? A. I think it was called a support.

Q. All right, whatever you want to call it, shown as 17 in the Clutter patent? A. Will you let me have your question again?

Mr. Corbett: I don't think it is the purpose of this witness here to ask as interpreter of a claim; that is the function of the court.

(Last question read.)

A. It would be.

Q. You find it in there, do you? A. Yes.

Q. And you consider that any machine that didn't have that support, then, would not be described by that claim and would not infringe it; that is your notion of it, is it?

Mr. Corbett: Your Honor, I object to that; that is what constitutes an infringement of the patent claim.

The Court: Well, he is an expert. Take his answer for what it is worth.

Mr. Corbett: Exception.

(Last question read upon request of witness.)

A. I don't know as I get that yet.

Q. You don't understand the question, do you?

(Question again read.)

A. I should think that would be it.

(Narrative continued.) In the Osgood and General machines, the tripping line is used only when a load is to be dumped through the bottom. And that is only operated after the scoop is placed then a man just pulls on the line. During the other operations of the Osgood and

General machines the bucket is rigid on the stick, that is connected rigidly. When they dump through the mouth they do not need to use the tripping line.

Q. Referring to this chart 60, and to the illustration of the Osgood machine shown therein, if the scoop was pulled in towards the boom, the top of this angle iron on the stick would engage the link, wouldn't it? A. If it was pulled in far enough, it would, yes.

Q. And when it did that, it would cause the link to get out of line with the hoisting line, wouldn't it? A. It would, if it reached that position.

Mr. Corbett: I want to say, Your Honor, that that is not a chart of the Osgood machine; not made to scale at all.

The Witness: It is not true to scale of the Osgood machine; it was just made to show this brake line.

Q. Well, the principle would be the same? A. The principle is the same.

Q. Only a matter of degree? A. Yes, sir.

Q. Only a matter of this particular line of the angle iron engaging the link with this angle of the boom or stick 35 or 40 or other degrees? A. In the making of that there was no attempt to show where this line would go.

Q. Well, as I say, it is merely a matter of how big the angle is here between the stick and the boom before these parts engage; I mean by these parts, the upper part of the angle iron and the link? A. Well, in this sketch, just taking the sketch, without regard to scale position, it would strike the boom instead of the channel you are talking about.

Q. I mean, when you pull the scoop in toward the boom? A. When you pull in, the boom would remain where it is and the shovel would travel here and get further away, and the bar would strike on the boom just as we had it in the other.

Q. Well, in that way it differs from the Osgood machine? A. Yes, it differs.

(Narrative continued.) In speaking of the difference in power that you could apply in the case of what they call the whirlie, that is, a machine that turns clear around, and that in which you swing the boom 180 degrees, that difference in power is a matter of degree of the power. In one you can apply more power than in the other. Of course, if you can wind the thing around more,

you can apply more power to the thing than if you wind it around less. I never operated these Keystone ditching machines involved in this case. I have not operated any of the machines any more than just a few strokes when directing runners or operators, the pit man, as to how they should use a machine, and why it should be done this way or that way. The machine I am talking about is a large shovel, out-stroke shovel, and also the drag line, the in-stroke; that is, in relation to the drag line, that construction. A great many times on them. I have not operated any of these ditchers at all. I have seen the Osgood and General operate and have seen a great many of others operate at different times; been watching them as long as they have been out; whenever I would see them I would drop in on these things; I would take notice of them. As to my experience with patents I never prepared any patent applications, but had them prepared by attorneys and checked them with my attorneys. I never undertook to prepare any patents myself, I leave that to the attorney. I have taken out a good many patents myself.

Mr. Richey: That is all.

RE-DIRECT EXAMINATION by Mr. Corbett.

Q. You spoke, in discussing the Mahoney device, the device of the machine as it is operated in the cornfield as shown in Defendants' Exhibit 4, as having a tripping line operated by power. Will you explain just how that was done? A. That tripping line was pulled over a wench, that is, a wench is a drum on a wind, and when you take two or three turns around the drum, you could draw on the bite or free end a trifle perhaps up. My understanding is that that is the way that was done with that machine.

Q. And the wench merely is incidentally operated in response to a snubbing of that line around it by the man on the ground; is that right? A. It is.

Q. I was not quite clear on the question put to you about the number of operating lines on the Mahoney device. I wish you would state just how many operating lines there are on the Mahoney device there were, in comparison with the device of the Clutter patent, ignoring the line for tripping the bucket and the lines for swinging the boom and stick. Just how many lines, operating lines, were there? A. There were two.

Q. Two in the Mahoney device? A. Two in the Mahoney device.

Q. And how many in the Clutter device? A. Two.

Q. Now, I direct your attention to the patent to Mahoney and particularly to the linkage at the top of the ditcher stick. That linkage is designated 42, is it not? A. Yes, it is.

Q. And it is shown across the hatch in arms; is that right? A. That is right.

The Court: You are not referring to these various exhibits now, Mr. Corbett, if you want to get that into the record.

Mr. Corbett: This is a copy of the Mahoney patent, is all; just an enlargement of it.

The Court: All right.

Q. That linkage 42 carries a sheave, does it not? A. It does.

Q. And I call your attention to the Clutter patent No. 1,317,431, and particularly to the link or links 19 of that patent. That link is connected to the upper end of the ditcher stick in the Clutter device, is it not? A. It is.

Q. And it assists—at least assists in carrying the sheave; does it not? A. It does.

Q. Referring to the patent to E. O. Rood, No. 386,438, and particularly to the connection of the cable or line 16 with the upper end of the ditcher stick, do you find a link carrying a sheave? A. No.

Q. Then in that respect you would say, would you not, or would you say that the patent to Mahoney, or the structure of the patent to Mahoney is more similar to the structure of Clutter than the Rood device? A. In that detail it would be.

Q. In this E. O. Rood device, as shown in patent 386,438, mention was made of a spar or strut C. Have you any knowledge as to whether or not this device was ever used without that strut? A. I have.

Mr. Richey: Now, is that your own knowledge, or just what somebody told you?

The Witness: No, sir; I never saw the spar on any of these machines, and I saw them a great number of times through the years in that line of work.

Q. You saw it operate without the strut? A. Yes. I never saw it operate with the spars or strut.

Mr. Corbett: That is all, Your Honor.

RE-CROSS EXAMINATION by Mr. Richey.

Q. When they left off the spar C of the Rood machine, they put on a bottom line and a slope rope, didn't they? A. In some of the machines, along earlier in the period of these people, they did.

Q. Well, I mean in the machines of the type shown in this patent here? A. Yes.

Q. They left the spar off and put on a slope rope and a bottom line on? A. That didn't function necessarily for holding it down. It created or set the slope of that bank.

Q. A slope rope? A. Yes.

Q. And the bottom line would be without it? A. Well, these slope ropes could be hooked on to different angles, and then when it came to that shown, they could get the position to get slope.

Q. They also made other changes in the machine, did they not? A. These machines were built by the owners for their use, and I imagine there was more or less changing; I think they did make some changes as they went along, especially in the larger machines. Each time they built one they would make some slight change, something that would be longer or shorter, or something of that sort, because they didn't build them to sell as a manufacturing proposition—not a great many of them.

Q. Now, you have seen this Mahoney machine in Exhibit 5, haven't you? A. I have seen the Exhibit 5.

Q. That is different from both the Mahoney machine of the patent and from that in Exhibit 4, isn't it? A. It is some, yes.

Q. Which of the three do you consider to be nearest like Clutter's; that is, which of the three Mahoney machines, the one in the patent or in this Exhibit 5 or Exhibit 4? A. I don't know as there is any material difference between the one of the patent and this, in relation to the Clutter machine. I don't know as I would make a choice.

Q. But in Exhibit 5, the hauling line is connected off of the connection between the scoop and the handle, and in the patent they are both on the same point? A. Oh, yes, but practically none of them made like that.

Q. Like what? A. No machines built like that.

Q. That is the one you think is impractical? A. Yes; they make the patent view like that, and put the pulling line on, but when they build it, they put it where they have to have it. After they attempted to use it the

first time, the way it would pull, they would take it off here and put it down here (indicating). A great many of these patent plans have just those kind of things in them.

Q. Then you think as a matter of fact that Exhibit 5 is better than the machine shown in the Mahoney patent? A. Well, my thought was it was better than the other photograph before some slight change.

Q. That is, Exhibit 4? A. Yes, Exhibit 4. I was not comparing it with the patents, particularly. It has been altered some over the first one, this Exhibit, after it was taken.

Q. You said something about part of the power of the hoisting line in the Clutter patent being diverted to the boom through the cross link 17. The major portion, however, would go on to the stick, wouldn't it? A. No, I don't know as the major portion would. It would be a considerable amount of it carried here.

Q. Well, there would be enough to operate the stick? A. It would operate it but not nearly so far out. It shows it in the operating position there now, I believe.

Q. But the difference in the power that is conveyed through the link on the Clutter machine and in the machine of the defendants would be a matter of amount of power, wouldn't it? A. Let's have that question again.

Q. Well, consider the power applied by the hoisting line. The difference between the amount of power applied to the ditcher stick in the Clutter machine and that applied in the defendants' machines and the other machines where the cross link is omitted, would be just a matter of amount, wouldn't it, matter of degree? A. Well, yes, of degree. It would be a considerable amount.

Q. One would get more power than the other? A. Would be greater.

Mr. Richey: That is all,

Re-Direct Examination by Mr. Corbett.

Q. In the operation of this LeRoy Clutter structure as shown in patent 1,317,431, would there ever be a time in which the raising of the boom by the hoisting line would result in exerting the power almost exclusively upon the boom, or would it always be divided, or equally divided? A. No, it would change. When the boom got higher up, there would be less on the outer end.

Q. That is, on the outer end of what? A. Of these links.

Q. Well, read the numbers. A. On the handle 1, through the links 19.

Q. In other words, as the boom got higher up, there would be less pull on the links 19; that is, less pull on the upper end of the ditcher stick; is that right? A. There would be some less, yes.

Mr. Corbett: That is all, Your Honor.

Mr. Richey: That is all.

Mr. Corbett: We have some depositions to read in connection with the Bernard Clutter development. Do you want us to start that now?

The Court: You might as well get that over with.

Mr. Corbett: All right.

The Court: You can't summarize them, can you?

Mr. Corbett: Well, I think we can summarize some of it, but we would like to get a true picture of it with at least two or three of them. Mr. Mahoney has been going over it some, trying to cut out what we could.

The Court: All right, you present it in your own way.

(Adjournment to 9:30 a.m., March 11, 1931.)

(March 11, 1931, 9:30 a.m. hearing resumed.)

Mr. Corbett: Your Honor, I want to say that we have our machine on that Sam Davis coal yard lot, and would like to know what time it would be agreeable to you to look at it. Would you care to look at it today?

The Court: I think it would be a good plan to adjourn about 11:30 and go there, like we did before, leave here at twelve o'clock. Will we have enough time that way?

Mr. Corbett: I think so. We will not have a protracted demonstration, but we want to show it to you.

The Court: Is that satisfactory to you, Mr. Richey?

Mr. Richey: Yes, sir.

Mr. Mahoney: The deposition of Bernard R. Clutter—

The Court: Now this relates to what?

Mr. Mahoney: This relates to the first Downie patent. The drop bottom development.

The Court: And this is the matter with reference to which you claim fraud or non-disclosure or something of that kind?

Mr. Corbett: That is right. But we are going into the patent angle of that thing first, and show Your Honor the similarity of the devices.

The Court: All right.

DEPOSITION FOR THE DEFENDANTS

Taken at Lakewood, New Jersey.

NOTICE OF TAKING TESTIMONY.

MR. PHILIP E. SIGGERS,
918 F Street, N. W.,
Washington, D. C.

MESSRS. RICHEY & WATTS,
1030 Union Trust Building,
Cleveland, Ohio.

Attorneys for Plaintiff:

Please take notice that the defendant herein will take the testimony of Bernard R. Clutter, 17 Edgewood Court, Lakewood, New Jersey, who resides more than one hundred (100) miles from the place of trial herein, for use on behalf of the defendant at the final hearing of this cause, before Helen R. Grove, a Notary Public in and for the County of Ocean, New Jersey, who is not of counsel nor interested in this cause, at the office of Helen R. Grove, 125 Clifton Avenue, Lakewood, New Jersey, on the 24th day of February, 1930, at ten o'clock a.m., and thereafter from day to day as the taking of the deposition may be adjourned; and such testimony will be taken in accordance with the provisions of Sections 863, 864 and 865 of the Revised Statutes of the United States and the Federal Equity Rules.

You are invited to attend and cross-examine.

EDWIN P. CORBETT,
Attorney for Defendant.

Dated at Columbus, Ohio, this 19th day of February, 1930.

Service acknowledged February 20, 1930.

RICHEY & WATTS.

PRINTER'S NOTE:

A like Notice was issued in behalf of the General Excavator Company and was signed by Mr. Edward L. Reed.

The following deposition was taken on behalf of both defendants, pursuant to the above notice, at the office of Helen R. Grove, a notary public, 125 Clifton Avenue, Lakewood, New Jersey, commencing at ten o'clock a.m., on the 24th day of February, 1930. Counsel for all parties being present.

BERNARD R. CLUTTER, a witness called by defendants, being first duly sworn, testified as follows:

DIRECT EXAMINATION by Mr. Mahoney.

My name is Bernard R. Clutter. I reside at Lakewood, New Jersey. At the present time I am with the Consolidated Production Corporation, doing road work. I am foreman with this company. I am forty-eight years old, will be forty-nine this year. I am testifying under subpoenas in these cases. I haven't absolutely any interest in these cases. I am a brother to LeRoy P. Clutter, patentee of United States Letters Patent 1,317,431.

Mr. Mahoney: The United States Letters Patent, 1,317,431 referred to in the answers to Q. 8 and Q. 9 is hereby offered in evidence as Defendant's Exhibit No. 24, and the Notary is requested to mark the same "Defendant's Exhibit No. 24, United States Letters Patent No. 1,317,431, dated September 30, 1919."

(Narrative continued.) I have been employed by the Keystone Driller Company of Beaver Falls, Pennsylvania, plaintiff in these cases. My recollection is that I was first employed by this company in the latter part of 1913 or the early part of 1914. I was employed by them as a Keystone excavator demonstrator. I actually operated these shovels on the job. When I was not on the road demonstrating I was employed in the shop, only slightly in the erecting department in consultation with the chief engineer in regard to changes or improvements of machines. Some of the changes or improvements suggested by me were incorporated in Keystone machines while I was employed there. I do not remember the nature of the changes or improvements that were made while I was employed there but in a general way number 6 Keystone excavator was designed principally on my suggestion except side braces and the circle. This machine was a double cylinder steam machine with steel frame. This machine was made in accordance with the LeRoy P. Clutter patent 1,317,431, so far as the boom, ditcher stick and scoop mechanism was concerned. The designing work which I referred to as having made on this machine related chiefly to the power plant, and the body of the machine. I worked for the Keystone Driller Company demonstrating from the main plant at Beaver Falls, Pennsylvania, approximately two years to my rec-

ollection. The next position I held with the Keystone Driller Company was salesman and demonstrator. First in the factory territory, in fact covering a large part of the United States. Later, I was transferred to Carthage, Missouri. The Keystone Driller Company has a branch plant at Carthage, Missouri. Mr. Frank Oliver had charge of the branch plant of the Keystone Driller Company at Carthage, Missouri. When I was transferred to Carthage, Missouri, I was selling and demonstrating shovels and excavators, in the central western territory, and occasionally back in factory territory.

The Keystone Driller Company's branch plant was removed from Carthage, Missouri, to Joplin, Missouri, in 1916 or 1917. I was instrumental in getting the branch plant of the Keystone Driller Company from Carthage to Joplin by securing the location for the plant of what was known as the bridge plant at Joplin, Missouri. This was a large steel structure, approximately a hundred and fifty feet by three hundred feet, not complete at the time of purchase. The bridge plant came to be for sale because that bridge company had gone bankrupt and the plant was not in use. I had opposition in getting the Keystone people to take over the bridge plant at Joplin, Missouri. This opposition came from R. M. Downie and Frederick W. Ransom. After they had purchased another site, I finally got them to take the bridge plant in preference to the site that had been selected. I urged them to call a meeting of their directors and appoint a committee to come to Joplin and investigate the whole proposition, also insisted that they appoint R. M. Downie as one of the committee. I was informed that they had complied with my request and that Mr. Downie and I believe Mr. Warren was appointed to come to Joplin, which they did. Mr. Oliver wired me I believe at Dallas to come in to the branch for the conference. The result of this conference was that the property formerly purchased was traded in on the bridge property. I believe this turned out to be a good investment for the Keystone Driller Company, because from the information from the Joplin office the total cost of the building when completed was a little less than thirty-nine thousand dollars and that later the Keystone Driller Company were made a proposition from O'Brien of Pittsburgh, Kansas, to purchase that plant for a hundred and twenty-five thousand. R. M. Downie was the general manager of the Keystone Driller Company, Frederick W. Ransom acted as as-

sistant manager for the company. My recollection is that I worked five or six years for the Keystone Driller Company. I left their employ and went in the business for myself. I did not have any other reason for leaving their employ, except that we could sell machines, but we could not get them from the factory to supply the demand. This was partly on account of the war. I did not have any disagreements of any kind with the Keystone Driller Company at the time I left there. They were very friendly. As an indication of their friendliness towards me I received a letter from Mr. Ransom expressing his regret that conditions were such that I felt I should withdraw from the company's services at that time. He also expressed the hope that conditions would readjust themselves, in the near future so that they would see me back in service.

After I left the employ of the Keystone Driller Company in the year 1918, I opened up a coal stripping plant near Inglevale, Kansas. I engaged in that business until I went broke. The next business I engaged in was working for a mining company in Joplin, Missouri. I forgot what they called the company, but the men who were in charge of the work were Wallowers. They were brothers. The older brother's name was Frank C. Wallower, and the younger brother's name was Herbert H. Wallower. I operated shovels and it was my duty to oversee two shovels. They had Keystone shovels. On the mine work we used skimmer scoops on these Keystone shovels. We may have used one ditcher scoop. No ditcher scoops were used on mine work. I operated these shovels for Wallower brothers on other types of excavation besides mine work. I excavated a basement job for Wallower brothers in Joplin, Missouri. This was the Joplin Supply Company building basement. This was a large basement. I do not remember how much ground this took up in Joplin but it was probably several thousand yards. My recollection is that it was about one-third of a business block. I actually operated the Keystone shovel on this particular job. The Keystone shovel that I operated on the Joplin Supply Company basement for Wallower brothers was an instroke ditching machine. This was of the type like that shown in Clutter patent 1,317,431, Defendant's Exhibit No. 24. I had difficulty with the pivoted scoop on this Keystone instroke ditcher on this Joplin Supply Company job, and this difficulty was principally the spilling of material over the sides of the

wagons. This spilling over the sides of the wagons was caused by the pitching forward of the scoop when dumped, and was caused by the cable hook-up. The reason for this is that when the scoop is tripped it has a tendency to pitch forward. This is caused principally by the strain of the cables on the attachment. I discussed this matter with my employers Wallower brothers and told them how we could remedy the situation. I suggested that we take a skimmer scoop and make it rigid, and dump the bottom. Wallower brothers authorized me to explain this to the Keystone Driller Company of Joplin, Missouri, and tell them just what I wanted. I explained to the Keystone Driller Company how I wanted this skimmer scoop mounted.

Q. I now hand you United States Letters Patent No. 1,107,899 dated August 18, 1914, and ask you when you refer to skimmer scoop if you mean the type of scoop which is shown in Figure 1 of the drawings of this patent? A. Yes.

Mr. Mahoney: The patent which has just been submitted to the witness is hereby offered in evidence and the Notary is requested to mark the same "Defendant's Exhibit No. 25, United States Letters Patent 1,107,899, dated August 18, 1914."

The Court: You say this has a drop bottom on it?

Mr. Mahoney: Yes, Your Honor. I can show you here.

The Court: I see.

(Mr. Mahoney continues reading.)

(Narrative continued.) I issued instructions as to how I wanted the skimmer scoop shown in Defendant's Exhibit 25 mounted on the Keystone in-stroke ditching machine. I ordered the brackets or carrying rack which supports the skimmer scoop removed, and holes drilled in skimmer scoop so that it could be attached to the ditcher stick same as ditcher scoop No. 3 on Patent 1,317,431. To attach the rear wall of the skimmer scoop to the ditcher stick, I used the same attachment that was made for the regular ditcher scoop No. 3. That is, I used the same bracket No. 2 that had been used to connect the old pitch scoop as shown in Clutter patent 1,317,431. The other changes that were made in the skimmer scoop to mount it on the in-stroke ditching machine were as follows: The straps which support the old type ditcher

scoop were fastened to the front of the scoop as on ditcher scoop No. 3 of patent 1,317,431.

In Clutter patent 1,107,899, the mouth of the skimmer scoop is directed so as to dig away from the machine when it is being used as a skimmer scoop. But after the skimmer scoop was placed on the in-stroke ditching machine it was pulled towards the machine in digging the same as the ditcher scoop No. 3 on patent No. 1,317,431. There was a pulling member attached to the skimmer scoop for pulling it towards the machine when used on the in-stroke ditching machine. This pulling member was attached to a ba.. attached to the skimmer scoop in the same manner as the ditcher scoop No. 3 on patent 1,317,431. The skimmer scoop that I instructed to be mounted on the in-stroke ditching machine, my recollection is that it was one of the scoops purchased by Wallower brothers when they bought their machine from the Keystone Driller Company. However, that matter is not entirely clear in my mind as to whether Mr. Wallower purchased an additiona. scoop for this purpose or not. When I wanted the skimmer scoop prepared for mounting on the in-stroke ditching machine I went to the Joplin branch of the Keystone Driller Company, and told them what I wanted to have done so as to mount the skimmer scoop in the in-stroke ditching machine. They said that I wouldn't be able to close the door on the bucket. I believe one of the Wallowers was with me at the time. Mr. Wallower instructed the Keystone Driller Company to follow my directions saying to the Keystone people that "if Clutter said it would work he was willing to take a chance." They then made the changes that I required. The skimmer scoop was actually mounted on the in-stroke ditching machine for use on the Joplin Supply Company job. When mounted on this machine the skimmer scoop had a drop bottom thereon, pivoted at the side walls of the scoop like that shown in Clutter patent 1,107,899, Defendant's Exhibit No. 25, at the front end of the scoop. When the skimmer scoop was applied to the in-stroke ditching machine, it operated so that the bottom dropped when dumping.

The skimmer scoop shown in Clutter patent 1,107,899 was rigidly attached to the ditcher stick of the in-stroke ditching machine. It was made rigid, first by a wedge under the latched hook spring No. 13, of Patent 1,317,431. This did not prove satisfactory, and later we

took the latch hook off and used a block under pin No. 5, which formerly was movable, through a slot No. 16a, between guide 6 and scoop carrying member 1. The bottom of the plank or lower part of the plank rested on the bottom of the slot. The upper end bracing pin No. 5, against the upper end of the slot. This prevented the bucket from pivoting, and held it rigid when actually used. I actually operated this Keystone in-stroke ditcher with this drop bottom skimmer scoop thereon, rigidly held on the in-stroke ditcher stick at Joplin, Missouri, on the Joplin Supply Company excavation. I did not have much further trouble with the drop bottom scoop spilling any of the dirt over the sides of the wagons. As to closing the bottom of the drop bottom scoop in this in-stroke ditching machine, I had a little trouble at first but nothing to speak of. It was only a question of how to swing the bucket and slap the bottom shut. It was first attempted by using two men with a pole running under the boom which crept up and pulled the bottom shut. I was not operating the machine when this was being tried. There was another operator on the machine when I got to the machine at the start, and they were closing the bottom with a pole, handled by two men. I took over the operation of the machine when I got to the place where they were operating it. I closed the drop bottom by the motion of the boom and ditcher stick, and swinging the bottom shut. In other words, I flipped the bottom shut until it latched. The latch used on this drop bottom was the same type latch hook that was used on the skimmer type bucket. This sort of latch was not satisfactory. We had to keep a man on the opposite side of the wagon from the machine to pull the latch hook. That is, for dumping. It was not much of a job to improve it so it could be dumped from the machine. We used the old type brace bars and the pivoted bracket that had been on the old pivot type scoop when we made the change to the skimmer scoop first because we had them. It made a quick and easy manner to hook up the scoop for a trial. Also more economical for the try-out. Second, because if the scoop did not work practical as a drop bottom, we thought we could use it as a pitch scoop if necessary.

We continued to use this rigid drop bottom scoop on this in-stroke ditcher for the remainder of the job. I would say that period was possibly a month or so. The machine finished the job with this drop bottom rigidly connected scoop thereon. There were no other machines

on this job. As to the date that I used this rigidly connected drop bottom scoop on this in-stroke ditcher at Joplin, Missouri, on the Joplin Supply Company excavation, my recollection is that it was the early part of 1920. I do not remember how early it was first used. It was during the winter, that is during the winter of 1919 and 1920. I remember that Mr. Oliver, Mr. Culbertson, Mr. Blosser, Mr. Hazen and a number of other employees of the Keystone branch at Joplin, Missouri, saw this machine operate with this drop bottom rigid scoop on the in-stroke ditcher. My recollection is that Mr. Ransom was there, he was not from the Joplin branch—he was from the factory, and was assistant manager.

These men told me they thought this drop bottom rigidly connected scoop on the in-stroke ditcher was quite an improvement over the pitch bottom scoop in dumping into wagons. I think some of the employees of the Keystone branch at Joplin were down there every day to see this machine operate as I had improved it. The nature of the work that the Keystone company did to change over this skimmer scoop for use on the instroke machine, was to detach the brackets or carrying frame of the skimmer scoop, and drilled holes, and attached the connections from the ditcher type No. 3 of patent 1,317,431 practically as attached to the ditcher type scoop that we discarded.

I never applied for a patent on this combination of drop bottom rigidly connected scoop to an instroke ditcher stick. I intended to apply for a patent on this arrangement, but changed my mind when I was informed that Mr. Downie had been working on the drop bottom scoop, and had taken out a patent prior to the time I had gotten up this scoop. This information was given me by Mr. Oliver some little time after we had used the scoop on this machine. In a conversation I informed Mr. Oliver I was going to apply for a patent. And he informed me that the office didn't know anything about it, but that Mr. Downie had been working on or worked up a drop bottom scoop, prior to this operation, and was filing a patent on it, or taking out a patent. He said that that office didn't know anything about that. This conversation with Oliver took place in the early part of the summer of 1920.

Q. Was the Keystone Driller Company putting out any machines of the instroke ditcher type in the year 1920 that had a drop bottom bucket? A. I don't know.

Q. Did you ever hear of any being put out by them prior to your talk with Oliver in the summer of 1920? A. No.

Q. If any such machine was being manufactured, Oliver would have known about it. Is that correct? A. I don't know about that.

Q. When did you first find out that the Keystone Driller Company were using an instroke ditcher having a rigidly attached drop bottom scoop on their machine? A. I am not sure when I first knew about that.

Q. Was it after the summer of 1920?

Mr. Edgerton: Objected to as leading.

A. Yes.

Q. You had taken Oliver's word in this matter. Is that correct? A. Yes.

Q. Did you later find out that Mr. Downie did not file an application on this combination of an instroke ditcher machine with a drop bottom bucket until June 27, 1921? A. Yes.

Q. What became of the machine that was used on this Joplin Supply Company job having the drop bottom rigidly connected scoop? A. I could not answer that.

Q. Do Wallower Brothers still have the machine? A. No.

Q. Do you know what they did with it? A. They sold the two machines.

(Narrative continued.) I do not know if the drop bottom rigidly connected scoop was attached to the instroke ditcher when it was sold, I am not sure about that. They sold two of their machines—one went to Oklahoma, and fell down on the demonstration. I was called from Caney, Kansas, to go down to Oklahoma and see if I could put the demonstration over. This I did, and got the machine accepted, but do not know whether it was the same machine that was used on the Joplin work with the rigid type drop bottom scoop, or the other machine that was not equipped in this manner. The attachments used at Joplin were not with this machine at the time I demonstrated it. In other words, the machine that I was sent down to Oklahoma to demonstrate was not intended to operate as an instroke drop bottom ditcher scoop. I don't know what became of the machine that had the instroke scoop with the drop bottom thereon.

After I finished the Joplin Supply Company job at Joplin, Missouri, I took a sub-contract from R. L.

Plunkett of Coffeyville, Kansas, loading cinders on railroad cars for the Missouri Pacific Railroad Company at Cadey, Kansas. After this Coffeyville, Kansas, job I went to Trinidad, in the British West India Islands. The reason I came to go down there was that I received a wire from the Keystone Driller Company at Beaver Falls, Pa., that they had sold some machines through the Tidal Engineering Corporation to the Trinidad government. They asked me if I would consider a proposition to go down there and install the machines. Their first proposition was not accepted, but I made them a proposition which they forwarded on, through the Tidal Engineering Corporation, to the Trinidad government, that was accepted. I actually went down there. The work I was supposed to do down there was to erect and get the machines in operation. The work that I did was to take charge of field work. The Keystone Driller Company sent one machine down there. I was offered this job during the summer of 1920—I don't remember what month I went, or what part of the summer. As soon as my proposition was accepted I came east for the purpose of going to Trinidad immediately, but on account of the machines not being loaded on the boat, I did not leave for some little time. While I was waiting, I demonstrated a machine for the Keystone company at Barberton, Ohio. I don't remember how long a period it was from the summer of 1920 before I actually left for Trinidad, it was during the hot part of the summer, I don't remember what the date was. I have the passport. I don't remember what the attachments were on the machine I demonstrated for the Keystone at Barberton, Ohio. The type of the machine that was used at Trinidad and which was sent down there by the Keystone company was a pitch bottom. That is the type shown in Clutter patent 1,317,431. I was in Trinidad until the early part of the summer of the year 1921. I have not worked for the Keystone Driller Company since I came back from Trinidad in 1921, I did go up to North Dighton, Mass., for the purpose of demonstrating a machine, but on account of the boiler not being in compliance with the Massachusetts State laws, we were not able to demonstrate this machine.

I first conceived the idea of using a rigid drop bottom bucket on an instroke ditching machine, about 1916. I did not put this idea into use at that time, because the opportunity was not favorable. I was working for the

Keystone Company and the patent laws as I understood them were such that the company that you were working for held certain rights over inventions gotten up, or was entitled to rights in it. I was not as versed in patent laws. I felt that the opportunity would favor some time that I could get it up and try it out. I have a blue print showing the manner in which I attached the drop bottom skimmer scoop to the instroke ditching machine. I haven't got it on my person, it's out in the car. I will go out and get it. (Witness produces blue print.)

The Court: This is the blue print from which the shovel was made; is that it?

Mr. Mahoney: That is from recollection. The blue print was made to illustrate.

Mr. Edgerton: That is a present day recollection.

Mr. Corbett: That was made subsequently to show what they did with it.

(Mr. Mahoney continues reading deposition.)

Q. Does this blue print which you have just produced show the manner in which you connected the drop bottom skimmer scoop and rigidly attached it to the instroke Keystone ditching machine on the Joplin Supply Company job at Joplin, Missouri, in the winter of 1919 and 1920? A. Yes.

Q. When was the drawing made from which this blue print was taken? A. In 1929.

Q. Did the Herbert H. Wallower mentioned in this blue print cooperate with you in the designing of the machine? A. Yes, he did.

Mr. Mahoney: The blue print which has just been produced by the witness is hereby offered in evidence and the Notary is requested to mark the same "Defendant's Exhibit 26, sketch of drop bottom skimmer scoop attached to Keystone instroke ditching machine and used on the Joplin Supply Company basement excavation at Joplin, Missouri, winter of 1919 and 1920."

Mr. Edgerton: The Exhibit 26 is objected to as secondary evidence and is further objected to as being insufficiently proven.

(Narrative continued.) The Keystone Driller Company wrote me a letter in which they referred to the drop bottom rigidly attached skimmer scoop used by me in Joplin in the winter of 1919 and 1920. I hereby produce

that letter. This letter was received by me through the regular course of business through the mail.

Mr. Mahoney: The letter which has just been produced by the witness is hereby offered in evidence and the Notary is requested to mark the same "Defendant's Exhibit No. 27, original letter on Keystone Driller Company's stationery, dated February 20th, 1926, addressed to B. R. Clutter, Lakewood, N. J., and signed Rex Downie."

Cross Examination by Mr. Edgerton.

Referring to Defendant's Exhibit 26, I did not make this drawing. The drawing which I testified was made in 1929 is in accordance with our recollection of what we used at Joplin, and just how we applied it. As to your observation that some of the details are incomplete in this drawing, for instance, the structure of the latch, my recollection is we increased the length of the latch bar, but intended to make further changes. I don't believe I remember just exactly what we used as a latch.

Q. I observe further that the heads of the bolts supporting the bail and scoop support are not shown. Also the head of the bolt for the scoop bottom. Would not those bolt heads extend on the outer sides of the scoop support and the bail respectively? A. I am not positive whether we used bolts or rivets for the hinge joints.

Q. You have testified, I believe, that you used the skimmer as manufactured by the Keystone Company. Do you remember whether or not the skimmer bucket had the bolts or rivets? A. I do not.

Q. What sort of material were you working in on the Joplin job you have previously referred to? A. Earth excavations.

Q. By earth excavations do you mean it was free from boulders, rocks and stones? A. No.

Q. Well, then, will you please state more specifically what you do mean by earth excavations. A. The material being excavated was principally of earth, some loose boulders and some small amount of solid rock in the bottom.

Q. Did you use the apparatus illustrated in Defendant's Exhibit 26 to dig the solid rock you have referred to? A. No, sir, you cannot dig the solid rock, the kind of rock we had there had to be blasted, as it was more of a flint rock.

Q. Did you use this device for digging trenches? A. We did not; we used it as a pull, or ditcher scoop on basement work. I believe to answer that correctly I should bring out the point that to cut the sides of the basement straight and perpendicular it is necessary to cut a trench ahead of the main excavation. This we did.

Q. Then the material you encountered in this excavation at Joplin was of such a character that you could pull the bucket through the same notwithstanding the side protuberances such as the various pivot bolts and supports formed? A. There was no noticeable interference from these protuberances. Exhibit 26 correctly represents the principles used, and may be slightly in error as to details, as it was based upon our recollection of what was used.

Q. In other words, this drawing illustrates the principle but is not a faithful representation of the structure. Is that correct? A. Of the details.

Q. After you completed the excavation on the Joplin Supply Company's basement, you abandoned further experimentation on this device, did you not? A. Yes, sir, I did not go any further into the experiments at that time.

Q. And as a matter of fact, you consider the work you did on this scoop as shown in Defendant's Exhibit 26 an abandoned experiment?

Mr. Mahoney: The question is objected to on the ground that it has not been shown that the witness understands the legal meaning of the term "abandoned experiment."

A. I did not do any more work on the drop bottom scoop after that time.

Q. And did you feel that this was because of the extreme care required to make the device as a whole operative?

Mr. Mahoney: Objected to on the ground that it has been shown by the witness' testimony that there was no question as to the operativeness of this device, and as an attempt to mislead the witness. There is nothing in the record indicating that unusual care was required in the operation of the machine.

A. No.

Q. Not even as to the latching arrangement? A. I figured on making a change on the latching arrangement.

Q. Is it not a fact that you also abandoned this device because you did not conceive the advantage of the dumping bottom to be of sufficient practical worth to justify the expense of the re-design and further experimentation which would have been necessary in your opinion to make the device commercially useful? A. No—not to my recollection.

Q. I hand you a statement which has been acknowledged before a Notary Public on the 16th day of April, 1925, and ask whether you can identify the signature of Bernard R. Clutter as that of your own? A. It looks like it.

Q. I mark for identification the statement just identified by the witness as "Plaintiff's Exhibit A."

Cross examination closed.

Mr. Mahoney: The witness has been asked to identify a paper which he was not permitted to read, and I understand from counsel for plaintiff that he refused to offer this into evidence as an exhibit in this deposition, or to permit defendant's counsel an inspection of the document.

Mr. Edgerton: I hand the witness the statement previously referred to for his inspection. I will withdraw my statement.

Mr. Reed: The document was withdrawn after counsel for defendant had demanded the right to inspect the same, after it had been handed to the witness and inspection had been refused.

Mr. Mahoney: In view of the refusal of counsel for plaintiff to permit inspection of the paper in controversy, there will be no re-direct examination.

Deposition closed.

Mr. Richey: I will say, Your Honor, that the letter was submitted later, and it is among the papers brought up here.

Mr. Mahoney: This deposition of Bernard R. Clutter is offered in evidence, as well as the Exhibits, Nos. 24, 25, 26 and 27, that were offered in evidence during the taking of the deposition.

DEPOSITIONS FOR THE DEFENDANTS

Taken at Joplin, Missouri.

NOTICE OF TAKING TESTIMONY.

MR. PHILIP E. SIGGERS,
918 F Street, N. W.,
Washington, D. C.

MESSRS. RICHEY & WATTS,
1090 Union Trust Building,
Cleveland, Ohio.

Attorneys for Plaintiff:

Please take notice that defendant herein will take the testimony of the following people:

Phil Culbertson, 2431 Wall St., Joplin, Mo.,
W. L. Culbertson, 522 N. Sergeant St., Joplin, Mo.,
John Cummings, 20 S. Jefferson St., Webb City, Mo.,
M. A. Elsner, 317 N. Sergeant St., Joplin, Mo.,
Lysle L. Hazen, 714 Byers St., Joplin, Mo.

all of whom reside more than one hundred (100) miles from the place of trial herein, for use on behalf of the defendant at the final hearing of this cause, before Leela V. McCallum, a notary public in and for the County of Jasper, Missouri, who is not of counsel nor interested in this cause, at Room 402 Bartlett Building, 410½ Main Street, Joplin, Missouri, beginning on the 19th day of March, 1930, at ten o'clock a.m., and thereafter from day to day as the taking of the depositions may be adjourned; and such testimony will be so taken in accordance with the provisions of Sections 863, 864 and 865 of the Revised Statutes of the United States and the Federal Equity Rules.

You are invited to attend and cross examine.

EDWIN P. CORBETT,
Attorney for Defendant.

Dated March 12, 1930.

Service of a copy of the foregoing notice acknowledged, this 14th day of March, 1930.

RICHEY & WATTS.

PRINTER'S NOTE:

A like Notice was issued on behalf of the General Excavator Company and was signed by Mr. Edward L. Reed.

The following depositions were taken on behalf of both defendants, pursuant to the above notice, at the office of Leela V. McCallum, a notary public, Room 402 Bartlett Building, 410½ Main Street, Joplin, Missouri, commencing at ten o'clock a.m., on the 19th day of March, 1930. Counsel for all parties being present.

PHIL CULBERTSON, a witness called by defendants, being first duly sworn, testified as follows:

DIRECT EXAMINATION by Mr. Mahoney.

My name is Phil Culbertson. I reside at 2431 Wall Street, Joplin, Missouri. I am forty years old. At the present time I am a drilling contractor. I am testifying under subpoenas in these cases. I have no interest whatever in these cases. I was employed by the Keystone Driller Company of Beaver Falls, Pa. I think I began to work for this company in 1909 or 1910, and I worked for them about seventeen years. During that period I have been a salesman. While being employed as salesman I was located at Carthage and Joplin, Missouri. I worked out of Carthage and Joplin branch the major portion of the time. During the time while I was salesman for them the Keystone Driller Company manufactured drilling machines, excavators and pumps. I sold drilling machines and excavators. I am acquainted with Bernard R. Clutter who was formerly employed by the Keystone Driller Company. He was employed at the Joplin plant. His position was salesman and demonstrator for excavators. He operated the steam shovels. It was his duty to demonstrate the machine and show that it would do what it was claimed to do in their catalogs, and what salesmen claimed it would do. The machines I am referring to are Keystone excavators. At the time the Joplin Supply Company building at Third and Joplin Streets was erected I was living at Carthage, Missouri. The Keystone Driller Company's branch plant at that time was at Joplin, Missouri. I remember the time when the excavation on the Joplin Supply Company building was being done. Wallower Brothers had the contract for the excavation work on the basement. The machine which was used to excavate this basement was a model 3 Keystone excavator.

Q. I now hand you a copy of United States Letters Patent, No. 1,317,431 which has been offered in evidence

heretofore as Defendant's Exhibit No. 24, and ask you if the Keystone Model 3 Excavator was of the type shown in the drawing of this patent so far as the boom, ditcher stick and scoop mechanism was concerned? A. That's the boom and scoop they started the excavation with.

Q. The scoop which was first used was a Keystone pivoted scoop like that shown in the Letters Patent to which you have just been referred.

Mr. Edgerton: Objected to as leading.

A. Yes.

(Narrative continued.) B. R. Clutter operated the machine for Wallower Brothers on this job. His full name is Bernard R. Clutter. He was the same Bernard R. Clutter that had formerly been employed by the Keystone Driller Company as demonstrator. I have operated the Keystone Driller Company's Model 3 excavator, and have attempted to load dirt or spoil into wagons, the excavator having thereon a pivoted bucket like that shown in Defendant's Exhibit 24. I had difficulty in doing this and spilled the dirt over the sides. I couldn't hit the wagon. The Wallower Brothers I know had such difficulty in loading wagons with the Keystone excavator, on the Joplin Supply Company building, with the pivoted bucket on the instroke ditcher. Bernard R. Clutter was operating the machine at that time and I considered him a competent operator.

I know that changes were made on the Keystone Model 3 excavator to overcome the difficulties they were having on this Joplin Supply job in loading in the wagons with the pivoted bucket on the instroke ditcher. The changes that were made to overcome this were that he abandoned the kind of bucket he was using and substituted it with a skimmer type scoop, fastened on the machine in a rigid way that pulled backwards in the same way as the other type of scoop. In my previous answer I meant Bernard R. Clutter when I used the word "he." The dirt was dumped from the skimmer scoop through the bottom. When I referred to the skimmer type bucket I suppose it is the bucket that had been purchased by the owner of the machine for the regular skimmer scoop attachment on this Keystone excavator. They owned one, I suppose it's their own.

The skimmer type bucket which I have stated was made rigid to the instroke ditcher stick, was of the type

like that shown in Figure 1 of United States Letters Patent, 1,107,899, Defendant's Exhibit No. 25. The skimmer scoop shown in Defendant's Exhibit 25 was merely reversed on the instroke ditcher stick and used as a drop bottom scoop. To do this parts 44, 47, 48, 49, and 50 on patent 1,107,899 were removed, and the scoop fastened to the ditcher stick at approximately the same place as part 44 shown in this patent, and a bail added to the side wall as on the drag line ditcher. By drag line ditcher I mean the bucket as shown in patent No. 1,317,431. The skimmer bucket was mounted rigidly on the ditcher stick of the instroke machine. As I remember the blue print Defendant's Exhibit No. 26 shows the manner in which the skimmer scoop was attached to the instroke ditcher stick of the Keystone excavator under the direction of Bernard R. Clutter on the Joplin Supply Company job at Joplin, Missouri. The skimmer scoop was stripped of its members 44, 49 and 47 shown in Defendant's Exhibit No. 25 and the changes were made to adapt it to the instroke ditcher stick at the Keystone Driller Company in Joplin. I recall seeing Mr. Clutter at the Keystone plant while these changes were being made.

I remember that this Keystone excavator was actually operated on the Joplin Supply Company basement having this skimmer scoop rigidly attached to the ditcher stick, and dumping the dirt into wagons by dropping the bottom of the skimmer scoop. I actually saw this Keystone machine so operated on this job. Bernard R. Clutter was operating the machine at the time I saw it operating in this manner. Bernard R. Clutter closed the drop bottom of the scoop, by giving a little slack in the pull line, and catching the bucket which snapped it shut. I did not operate the machine myself on this Joplin Supply Company job with this rigid drop bottom bucket on, but I tried to handle the bucket and did. In other words, I got up on the machine and operated it to effect the closing of the bucket. I wanted to see if I could snap the bottom shut, and found I was able to do it.

Q. How did this rigidly attached drop bottom bucket on this instroke ditching machine as used on this Joplin Supply Company job compare with the results obtained by the use of the pivoted type bucket that was furnished by the Keystone Driller Company on this machine?

Mr. Edgerton: The question is objected to as it elicits opinion and the witness has not been qualified as an expert.

Mr. Mahoney: The witness has testified that he was a salesman of these machines for a number of years. He has also testified that he has operated these machines and observed both of the machines in question in operation and is therefore, certainly qualified to answer the question.

A. It made it possible to dump the dirt in the wagon and eliminated most of the over-spoil and done away with the clean up.

Q. How was this change considered by the officials and employees of the Joplin branch of the Keystone Driller Company? A. As far as I knew they were all very enthusiastic over it.

Q. How many times did you see this machine operate on the Joplin Supply Company basement, having the rigidly attached drop bottom scoop on the instroke ditcher? A. I don't know how many times I was down there.

Q. Were you down there to see it more than once? A. Yes.

(Narrative continued.) I do not recall how long this machine was used after it was changed to the rigidly attached drop bottom instroke ditcher on the Joplin Supply Company job. It finished the job, that is all I know. It had the drop bottom scoop rigidly attached to the ditcher stick when it finished the job. There were no other machines on this job that I ever saw. I do not recall the exact year in which this drop bottom scoop was attached to the instroke ditcher machine and used on this Joplin Supply Company basement job, but it was either in the fall of 1919 or the beginning of 1920. I recall that other employees of the Keystone Driller Company saw this rigidly attached drop bottom scoop used on the Keystone Driller Company's machine on the Joplin Supply Company job at Joplin in the fall of 1919 or the early part of 1920. The names of these employees were F. Oliver, F. W. Ransom and M. E. Blosser. As near as I can remember F. W. Ransom was manager for the Beaver Falls plant. Mr. F. Oliver was manager of the Joplin branch of the Keystone Driller Company. Mr. Blosser was salesman for the Keystone Driller Company at that time. I am not positive whether or not skimmer scoops manufactured by the Keystone Driller Company in 1919 and 1920 had side rake teeth. It is not just clear in my mind whether the skimmer scoop had any teeth attached

to the bottom that projected outwardly from the side walls so as to act as side rake teeth for cutting clearance for the bucket, or just how those teeth were arranged.

CROSS EXAMINATION by Mr. Edgerton.

I have not read the deposition of Bernard R. Clutter who has testified in these cases. When I operated the bucket during the excavation of the Joplin Supply Company's basement I did not perform an excavating cycle with the scoop. I am not positive whether that bucket was equipped with side rake teeth or not. I don't remember ever seeing this bucket as mounted on the Joplin Supply Company's excavation job in operation after the completion of the Joplin Supply Company's work. I did not see the excavation work started at the Joplin Supply Company's building site. I did not see the machine at the completion of the Joplin Supply Company job but before it was removed from the site of excavation.

Deposition closed.

W. L. CULBERTSON, a witness called by defendants, being first duly sworn, testified as follows:

DIRECT EXAMINATION by Mr. Mahoney.

My name is W. L. Culbertson. I reside at 522 North Sergeant, Joplin, Missouri. I am a drill contractor. I was employed by the Keystone Driller Company. My connection with the Keystone Driller Company began, under an agency contract ending in beginning of 1907. From the beginning of 1907 on a straight salary until 1927. The duration of my agency contract was for ten years prior to 1907. My recollection is that this agency contract covered all the territory lying west of the Mississippi River. After my agency contract expired I was employed by the Keystone Driller Company originally at Carthage, Missouri, subsequently at Joplin, Missouri. The Keystone originally had a plant located at Carthage, Missouri, and later moved it to Joplin, Missouri. While I was employed by the Keystone Driller Company at Carthage and Joplin my title was assistant manager. My duties consisted in looking after collections, and passing on credits. I am sixty-five years of age. I am testifying under subpoenas in these cases and have no interest in them. I am acquainted with Bernard R. Clutter who formerly was employed by the Keystone Driller Com-

pany. I have known Mr. Clutter for approximately fifteen years. While he was employed by the Keystone Driller Company I would say he was an excavator demonstrator. I was employed by the Keystone Driller Company at the time the Joplin Supply Company began the excavation for the new building at Third and Joplin Streets, Joplin, Missouri. I do not know the name of the firm that had the contract for excavating this building. I know that the machine used to excavate the basement was a Keystone machine. I don't tell from a side view of it whether the machine so far as the boom, ditcher stick and scoop are concerned shown in Defendant's Exhibit 24 was the machine that was used in excavating the Joplin Supply Co. job. In my observation of the work being carried on which was the latter part, or about three-fourths of the yardage handled was done by pulling towards the shovel by a Keystone machine. The various times I saw the machine operating it was operated by B. R. Clutter, "Burn" we called him altogether. I recall that during the excavation work on this basement that the Keystone machine was changed. The first I knew of such a change, Mr. Oliver told me "Burn" had changed the scoop on the Joplin Supply Company basement work. He said that they had reversed the regular operating of the skimmer scoop, which was a forward thrust and drop bottom to pulling the skimmer scoop towards the shovel. In other words, they took the skimmer scoop and reversed it on an instroke ditcher stick. I saw this machine operating on the Joplin Supply Company job with the skimmer scoop reversed and attached to the instroke ditcher stick. At the time I saw it operating "Burn" Clutter was running the machine. I couldn't say how often I saw this machine operating with the skimmer scoop on the instroke ditcher stick but it was quite a number of times. The machine was operated a very short time as a skimmer scoop.

As to the time the machine was used as a drop bottom instroke ditcher, I don't know the days but the bulk of the dirt was principally handled after the shovel on the boom was changed, that is, changed to a drop bottom instroke excavator. I know that the officials and employees of the Keystone Driller Company saw and knew of this improvement. Some of the employees of the Keystone Driller Company who saw this machine in operation with this improvement thereon were Frank Oliver, Lysle Hazen, Phil Culbertson, Gene Blosser (deceased).

There may have been others, I don't know. I know that the officials and employees of the Keystone Driller Company regarded this change of scoops made on the Joplin Supply Company job as beneficial.

CROSS EXAMINATION by Mr. Edgerton.

I have not read or had read to me the deposition of Bernard R. Clutter who has testified in these cases. I don't know that I ever saw the drop bottom bucket as operated on the Joplin Supply Company's basement after the completion of the job. I couldn't say whether or not the drop bottom bucket used on the Joplin Supply Company excavation was provided with side rake cutting teeth.

Deposition closed.

(At this time an adjournment in the deposition session was taken until March 20, 1930, at ten a. m.)

(Deposition session resumed March 20, 1930, at ten a. m.)

JOHN CUMMINGS, a witness called by defendants, being first duly sworn, testified as follows:

DIRECT EXAMINATION by Mr. Mahoney.

My name is John Cummings. I reside at Webb City, Missouri. I am a newspaper circulator. That is, I have charge of the circulation department of the Joplin Globe and the News Herald at Webb City. I am forty-six years of age. I am testifying under subpoenas in these cases and have no interest in them. I was employed by the Wallower Brothers of Joplin, Missouri, about twelve years. During the major portion of this time I was a mechanic for them. I was employed by Wallower Brothers during the years 1919 and 1920 and recall when the Joplin Supply Company building at Third and Joplin Streets, Joplin, Missouri, was being erected. Wallower Brothers had the contract for the excavation work on the basement of this building. I worked for Wallower Brothers on this job. The first work I did was fireman on the machine, and the second job was drilling and shooting the limestone we encountered on the excavation. The machine that was used to start the excavation was a No. 3 excavator. The first attachment used on this Keystone excavator when the basement was first begun was a skimmer scoop. The skimmer scoop is that type of

scoop that runs back and forth on the boom, without a ditcher stick or other attachments. The machine shown in United States Letters Patent 1,107,899, Defendant's Exhibit 25, was the type of machine that was first used on this job and is called the skimmer scoop. I don't remember how long this machine shown in Defendant's Exhibit 25 was used as to time, but I remember that about one-third of the excavation was made with the skimmer scoop machine. The next type of attachment that was used on this machine after the skimmer type attachment had been used was the ditcher scoop. The reason they made them change to the ditcher scoop attachment was because it became too muddy for the machine down in the basement. The machine was then put up on the bank and used as a ditcher scoop or instroke machine. The ditcher scoop that was used was like that shown in United States Letters Patent 1,317,431, Defendant's Exhibit 24. B. R. Clutter operated the Keystone excavator for Wallower Brothers on the Joplin Supply Company job. His first name was Bernard. The spoil that was taken from this excavation was loaded in wagons and hauled to different places to make fill. After we started work using the ditcher scoop attachment shown in Figure 1 of Defendant's Exhibit 24 the work did not progress very well. Mr. Clutter seemed to be unable to empty the ditcher scoop into the wagons without spilling a great amount of the clay and dirt. The machine at that time had the pivoted or pitch bottom scoop like that shown in Defendant's Exhibit 24. What caused the dirt to spill over the wagon sides I don't know. I think Mr. Clutter was a competent shovel operator. On the type of machine shown in Defendant's Exhibit 24 the bucket was dumped out at the end of the scoop, maybe I should have said the front end. When the latch was released the scoop fell and pitched the dirt out of the front end of the bucket in this type of machine. I think the pitching motion of the bucket when dumped is what caused the dirt to spill over the sides of the wagon. I don't remember about whether any difficulty was experienced in getting the sticky clay to fall out of the bucket with this pitch scoop on the instroke ditcher. There was a change made in the scoop on this instroke ditcher to overcome the difficulties in loading the spoil in the wagons. The change made was they took a skimmer scoop, attached it to the ditcher stick and used it.

It was made fast to the bottom of the stick. The skimmer scoop pitched like the former bucket until the latch was removed from the ditcher stick. In this scoop the dirt dumped from the bottom, the scoop unlatching at the back end. The scoop shown in Figure 1 of United States Letters Patent 1,107,899, Defendant's Exhibit 25, was the type of scoop that was attached to the instroke ditcher stick when this change was made. It was one of the scoops that had been furnished with the machine as a regular skimmer scoop. The blue print Defendant's Exhibit 26 shows the manner in which the skimmer scoop was attached to the instroke ditcher stick on the Keystone machine used on the Joplin Supply Company's basement excavation about which I have been testifying. The Joplin Supply Company basement excavation was made in 1919 or 1920 I don't know which. As to where the Keystone scoop was taken to have the changes made, I know that the Keystone truck called for it and delivered it back, so I suppose it was taken to their plant. After the scoop was brought back it was actually used on the Keystone ditching machine as a rigidly attached drop bottom bucket. The machine was operated by B. R. Clutter when rigged up in this manner. I don't remember the length of time the machine operated on this job as an instroke ditcher having a rigidly attached drop bottom scoop thereon, but I remember that about two-thirds of the excavation was performed with the scoop attached in this manner. There were no other excavators used on the job. This rigidly attached drop bottom scoop on the instroke ditcher performed the work very well. I do not remember that any trouble was had with the scoop rigged up in this way. I was fireman on the machine for part of the time during this excavation. I worked about and with steam shovels at other times prior to this, for Wallower Brothers. I acted as foreman on construction work of various kinds for Wallower Brothers. After this job was completed I did not work for Wallower Brothers after that. The reason was they were mining in Oklahoma and I lived in Webb City and as they moved their operations from Joplin to Oklahoma I did not care to go with them. I remember that Mr. Oliver, Mr. Hazen, that is Lysle Hazen, and Phil Culbertson of the Keystone Driller Company saw this Keystone excavator working on this Joplin Supply Company job with this rigidly attached drop bottom bucket on the instroke ditcher.

CROSS EXAMINATION by Mr. Edgerton.

The expression I used "drilling and shooting" means blasting the stone we found there. On the Joplin Supply Company excavation we did not blast the stone before we loaded it into wagons. I was not referring to some other job when I said that we were drilling and shooting. The kind of soil we excavated on the Joplin Supply Company job was black dirt, clay, boulder, and limestone. The limestone was blasted. The boulders were dug out with the machine. They were small enough to be loaded within the scoop.

Q. Now with respect to the excavator which has heretofore been referred to as the pitch scoop, what proportion of the work or spoil was dug with this machine? A. Well, which scoop does he mean?

Q. I refer you now to Defendant's Exhibit No. 24, and in connection with the preceding question please state what percent of the work or proportion of the soil was removed with this type machine. A. As I remember it was used about two days, probably loaded twenty-five wagons.

Q. Do you know of your own knowledge whether Mr. Bernard Clutter had ever operated a machine of the type illustrated in Defendant's Exhibit 24 before this Joplin Supply Company's basement excavation? A. No.

Q. You have testified that you considered Mr. Bernard Clutter a proficient operator, upon what is your judgment based? A. From the fact that he was employed by the Keystone Driller Company as a demonstrator of the Keystone shovels, and by his ability as I seen him operate them in comparison to other operators that I had noticed.

Q. Then you have seen him operate Keystone excavators before? A. Yes, sir.

Q. And machines of the type illustrated in Defendant's Exhibit 24. A. No.

Q. Who operated the latch while the pitch scoop like Exhibit 24, was employed? A. I don't remember.

Q. Do you remember whether or not you did? A. No. I did not.

Q. Who operated the latch on the drop bottom skimmer scoop, I might add, I don't mean the name of the man, but the position of the man assigned to this job?

Mr. Reed: Question objected to as indefinite, as it does not distinguish between the use of the skimmer

scoop as such and the use of the skimmer scoop on the instroke ditcher stick.

Mr. Edgerton: I will reform my question to specify the instroke ditcher stick.

A. The man standing by the side of the wagon would catch the rope, give it a pull which would drop the bottom.

Q. To the best of your recollection was this method of releasing the latch employed throughout the period that the drop bottom bucket secured to the instroke ditcher stick was employed in the Joplin Supply basement? A. Yes.

Q. Did you ever see the drop bottom scoop attached to an instroke ditcher stick used after this job at the Joplin Supply Company's excavation? A. No.

Q. Do you know whether or not the drop bottom scoop attached to the instroke ditcher stick was provided with side rake cutting teeth? A. I don't remember.

Q. Did you ever perform any of the excavating operations with the machine we have been referring to on the Joplin Supply Company's basement? A. No.

Deposition closed.

(Deposition session adjourned until March 21, 1930, at nine a. m.)

(Deposition session resumed March 21, 1930, pursuant to adjournment.)

M. A. Elsner, a witness called by defendants, being first duly sworn, testified as follows:

Direct Examination by Mr. Mahoney.

My name is Max A. Elsner. I reside at Joplin, Missouri. I am a building contractor. I am connected with the C. A. Dieter Construction Company. I am in general charge of this business. The C. A. Dieter Construction Company had the general contract for the construction of the Joplin Supply Company building at Third and Joplin Streets, Joplin, Mo. Wallower Brothers was the name of the company to whom the sub-contract was let for the excavation of the basement on this building. As to whether Wallower Brothers finished that work on the basement, the record shows that The Dieter Construction Company for the practical purposes of not leaving open excavation at the completion of the general excava-

tion made a certain yardage deduction from the contract with Wallower Brothers for column excavations, said column excavations to be completed when progress of the work made such work practical. The records further show that The Dieter Construction Company performed a minor portion of the general excavation for a part of which no specific date was indicated. With the exception of the deductions referred to The Wallower Brothers completed the excavation and received settlement therefor. The apparent final statement rendered by Wallower Brothers for this work is dated March 18, 1920. This statement shows the receipt in full by Wallower Brothers but does not indicate any date upon which the receipt for payment was given. The paper, however, on which this receipt is acknowledged is dated March 18, 1920. Referring to this paper the amounts next to the dates thereon indicate from partial records available that the amounts for the weekly payrolls of Wallower Brothers on this work. The date of the last payroll item on the paper dated March 18, 1920, to which I have been referring is March 13, presumably 1920. This paper dated March 18, 1920, shows that the original yardage to be excavated to be 5,636 yards from which a deduction of 84.32 was made and to which a yardage of 575.98 was added. The paper to which I have been referring is a legal size sheet bearing date of March 18, 1920, and the heading is "Wallower Brothers. Financial Statement of Account with C. A. Dieter." The contents of which is certain dates, financial amounts, yardage amounts, miscellaneous account notations, bearing a receipt in full for a settlement of said account as indicated thereon, said receipt being signed by Wallower Brothers. I obtained this paper from the files of the C. A. Dieter Construction Company. These files are under my supervision and control. I would not care to surrender the original of this paper as an exhibit for this deposition because I understand the deposition is to be filed in another state. I have compared what purports to be a photostatic copy of the paper to which I have been referring with the original, and to the best of my knowledge and belief it is a true and exact copy of the original.

Mr. Mahoney: The photostatic copy of the paper dated March the 18th, 1920, entitled "Wallower Brothers. Financial Statement of Account, with Mr. C. A. Dieter," which the witness has stated to be a true and correct copy of the original from

the files of the C. A. Dieter Construction Company is hereby offered in evidence as Defendant's Exhibit No. 28 and the Notary is requested to mark the same: "Financial Statement between Wallower Brothers and C. A. Dieter, dated March the 18th, 1920, for excavation work on Joplin Supply Company Building, Joplin, Missouri."

No cross examination.

Deposition closed.

LYSLE L. HAZEN, a witness called by defendants, being first duly sworn, testified as follows:

DIRECT EXAMINATION by Mr. Mahoney.

My name is Lysle L. Hazen. I reside at 714 Byers Street, Joplin, Missouri. My present occupation is assistant secretary of the Chamber of Commerce. I am thirty-nine years old. I am testifying under subpoenas in these cases, and have no interest therein. I have been employed by the Keystone Driller Company of Beaver Falls, Pa., and began to work for them about 1906 or 1907. My employment with them ceased on June 30, 1929. Just prior to leaving their employ I was general superintendent of the Southwestern Branch, and designing engineer at the same place. My office is located at Joplin, Missouri. As to my location with this company in the years 1919 and 1920 I will say that in the early part of 1919, I was in Germany. I got home about the latter part of May, and was sent to Joplin in the last part of June. For the remainder of 1919 I was superintendent of the Southwestern Branch of the Keystone Driller Company, and held that position in the year 1920. I recall the time that the Joplin Supply Company building at Third and Joplin Streets, Joplin, Missouri, was under construction, and remember when the excavation work was being carried on for this building. I think this was in the year 1920. Wallower Brothers had the sub-contract for the excavation for this building. That is, the basement excavation. A Keystone Model 3 excavator was used by Wallower Brothers for excavating this basement.

When the excavation work was first started Wallower Brothers used a skimmer attachment on the machine. As far as I know the words "skimmer attachment" is a trade name, but it is a scoop that runs parallel

with the boom, with a digging action away from the machine. United States Letters Patent 1,107,899, Defendant's Exhibit 25 in Figure 1 shows the attachment that I have referred to as the skimmer attachment that was first used when this basement job was started, but don't show the machine. The picture shows the same type of skimmer scoop attachment to which I have been referring. This type of attachment was not used on the machine throughout the entire excavation. There was a change in the type of attachments. The next type of attachment that was used on this excavation job for the Joplin Supply Company building, was a pull scoop. This is sometimes referred to as an instroke ditcher, I have heard it referred to that way. A pull scoop attachment for an excavating machine has the regular boom, a ditcher stick is hung from the end of it, the scoop is fastened to the end of the ditcher stick with the digging end of the scoop towards the machine.

Figure 1 of the drawings of United States Letters Patent No. 1,317,431, Defendant's Exhibit 24 shows the type of pull stroke attachment that was used on this Keystone machine on the Joplin Supply Company excavation so far as the boom, ditcher stick and scoop are concerned. The reason they changed from the skimmer scoop to the pull scoop on this job, Mr. Wallower told me that he was changing on account of the bottom of the excavation being muddy and hard to handle his teams in and out of the excavation. As I remember they had two operators on this machine for Wallower Brothers on the Joplin Supply Company excavation. The only one I knew was B. R. Clutter. His first name was Bernard, I have heard them call him "Burn." With the pull stroke scoop as shown in Defendant's Exhibit 24 they did not have any more trouble than was usual with that type of scoop. They had trouble unloading on account of the stickiness of the dirt and because of this they were breaking up wagons. This type of scoop was not efficient in dumping into wagons. Besides the foregoing reasons you couldn't get all of the spoil into the wagons because the wagons weren't big enough. Explaining that further, because of the arc described by the ditcher stick when the wagon is first spotted so the scoop could be tripped and then the scoop not being unloaded, the stick was straightened out and pulled away from over the wagon. It was either bumping the edges of the wagon or the bottom of the wagon with the scoop to shake the

dirt loose or lose part of it, when they straightened out the stick. The motion this scoop had when the latch was released was the end of the scoop which had the teeth on, or the open end dropped, being pivoted from the back of the scoop. I don't understand what you mean by the term "pitch and throw." When the latch was released and dropped, that is the front of the scoop dropped, if it had of been spotted in the right place when it was released, and dirt was loose enough to run out, I do not see any reasons why it should not all go into the wagons. As a matter of fact, they had trouble on this job in getting all of the spoil dumped into the wagon.

I knew that Wallowers took certain steps to get away from the trouble they were having loading the wagons with this pivoted scoop on this instroke ditcher machine on the Joplin Supply Company job. I was present when the plans for doing this were discussed. I remember how it was proposed to change the Keystone ditcher in order to get away from the trouble they were having with this pivoted scoop on this instroke ditcher.

Mr. Oliver and myself were talking to Mr. Herbert Wallower at the site of the excavation at Third and Joplin. During the conversation Mr. Wallower mentioned the trouble they had been having in unloading the dirt from the scoop and also of breaking the wagons. He said his cost of repairs and the hand work costs he had of shoveling the dirt into the wagons which had escaped from the scoop in unloading, that with all these he thought it would be cheaper to put the skimmer scoop back on, and to take the machine to the bottom of the excavation and finish it in the same manner in which they started it. He made the remark that on account of the skimmer scoop bottom tripping and dumping the dirt as it did he could unload all the dirt into the wagons without breaking the wagons. He said, "If that scoop that is on there now worked like the skimmer scoop we wouldn't be having this trouble." The skimmer scoop in question was lying over to one side of where we were standing talking. I measured the skimmer scoop and suggested we hang it on there and try out the scheme of dumping the dirt and still retain the pull scoop motion. I think Mr. Oliver raised the question, I am not sure, as to how the bottom could be closed if the skimmer scoop was rigged up as a rigidly attached drop bottom scoop on this ditcher stick. I told him I thought this could be done, but "let's call 'Burn' and if he says it can be done, I feel

certain it can." I don't remember exactly what Clutter said but I know he lined up with the idea right away. It was his opinion that the bottom could be closed if the skimmer scoop was rigidly attached to the instroke dipper stick. The skimmer scoop that was lying on the ground near the excavation was hauled out to the Keystone Driller plant.

At that place it was stripped of the rear housing parts 44, 47, 48, 49 and 50 as shown on Figure 1 of Letters Patent No. 1,107,899. It was then laid out and drilled to accommodate the pull scoop ditcher attachments. The next thing that was done was that bearings No. 2 and plates No. 4a were bolted and riveted to the skimmer scoop in the respective positions they occupied on the pull scoop. The numbers I have referred to are parts on Letters Patent No. 1,317,431. After these parts were put on, it was taken back to the excavation job, and the pull scoop in use on the machine at that time was taken off, and the skimmer scoop attached to the ditcher stick in the regular manner for attaching the pull scoop. When the skimmer scoop was attached to the ditcher stick, the digging or open part was to the machine. The pulling line was attached to the skimmer scoop. A standard pull scoop bail had been opened up and fit to the scoop. The line was attached to this in the regular manner. When the skimmer scoop was attached to the instroke ditcher stick in the regular manner it was not intended to swing on its pivot like the former scoop in dumping. That was just a matter of convenience, we intended to bolt the stick to the rear end of the scoop. The skimmer scoop was intended to work as a rigidly attached drop bottom scoop on this instroke ditcher. It was held rigidly at first by being latched into a digging position and clamped there by removing a small spacer from it under the guide and clamping down on, I think they call it the latch pin. Later on this bucket was held rigidly on this instroke ditcher by having a piece of wood stuck in there.

Referring to Defendant's Exhibit 26 this blue print shows the manner in which the skimmer scoop was held rigid. That piece of wood was put in the same as this is. After the skimmer scoop was rigidly attached to the instroke ditcher stick it was actually used on the Joplin Supply Company job. I actually saw it excavating on this job. At the time I saw it operating B. R. Clutter was one operator, and I don't remember the name of the

other one. As I remember it, Clutter was on it most of the time. This drop bottom was closed after a dumping operation by swinging the scoop on the end of the stick in towards the machine past the horizontal position of the stick, and then catching it quickly, or by swinging the open bottom in any position with enough force to make it close and latch. As to how long it took to adapt the skimmer scoop that was taken from the excavation site and brought to the Keystone factory to make the changes, I would say it was about two o'clock in the afternoon when they sent the scoop out to us, and it was five or six o'clock that evening when we had it ready to send back. I remember that I saw this rigidly attached drop bottom skimmer scoop operating on this Joplin Supply Company job, about every day until the job was finished, or rather until the scoop was changed back to a skimmer and the machine was taken to the bottom of the excavation to clean out the spoil from the foundation excavation. That is after the general excavation was complete there was some excavation done by the parties putting in the concrete footings, and the spoil to which I referred was this type of excavation, when the skimmer scoop was used again. This skimmer scoop was used as a rigidly attached drop bottom scoop on this instroke ditcher on the Joplin Supply Company job at least four or five weeks. There were no other excavators on the job. As to how it performed the work after it was rigged up with this drop bottom skimmer scoop rigidly attached to the instroke ditcher stick, I would say that before we put it on we used about half as many wagons as we did after that. It stopped the breaking up of the wagons, and also stopped the spilling of the dirt on the ground around the wagons.

Besides myself, the other employees of the Keystone Drilier Company who saw this machine in operation on this Joplin Supply Company job, operating with this drop bottom scoop rigidly attached on the instroke ditcher stick were Frank Oliver, W. L. Culbertson, Gene Blosser, Phil Culbertson, F. W. Ransom and there were some others from the shop, but I don't remember who they were. It's hard to answer what became of the machine after this Joplin Supply Company job was finished, particularly the scoops that had been used as drop bottom scoops, rigidly attached on the ditcher stick because there were two scoops changed. They were both of them changed back to skimmer scoops. One of them was made

into a special sand scoop for skimmer work when the machine was later sold by Wallowers.

I don't know where either of the scoops referred to are now. I know that the Keystone Driller Company made an attempt to locate these scoops after the machines were sold by Wallower Brothers. I have never seen this scoop after this job, but I was told that one of them was located by Keystone. F. W. Ransom and Rex Downie told me this. I couldn't tell you the date when the search for these scoops was made. The first I knew of it was approximately five or six years ago. Wallower Brothers did not have any trouble with this drop bottom scoop rigidly attached on this instroke ditcher stick on this Joplin Supply Company excavation. Nothing unusual with the exception that maybe once in a while the bottom would become unlatched on account of not properly bracing the corners when we had it in the shop. As to whether or not the skimmer scoops that were used on this instroke machine as rigidly attached drop bottom scoops, had any side rake teeth thereon, if you mean side rake teeth attached to the side of the scoop, it didn't have any. The corner teeth were the standard teeth then in use with one corner projecting to the outside to protect the hinge. That is the hinge of the drop bottom. Two scoops were rigged up for use as drop bottom scoops on this Joplin Supply Company job because everybody that saw it from then on I think wanted to add a little additional, and as they got an idea we took the extra scoop not in use and built their idea into it. I think all of these ideas principally related to the latch. The type of latch that was first used on this drop bottom bucket on the instroke ditcher, on the Joplin Supply Company job, was a regular skimmer scoop latch with the upper end lengthened and a flat place put on it for a seat and between the seat and the back of the scoop a compression spring was inserted, held in place by a bolt running through the seat, spring and back of scoop. The pull line was attached to the bottom or below the hinge of the latch.

As far as the operation was concerned and as long as the tripper or the man pulling the line was careful to keep all of the slack out of the line during the digging operation, it worked very well. But it wasn't satisfactory because the tripper would get careless and the line would foul in the digging operation and trip the bucket.

This difficulty was corrected. We made a latch trip which had a motion for tripping towards the operator instead of away from him, the line when attached to this avoided the former difficulty.

CROSS EXAMINATION by Mr. Edgerton.

I never saw the drop bottom scoop attached to the ditcher stick as used in the Joplin Supply Company's excavation in operation after the completion of this job. To the best of my knowledge I would say that the portion of the excavation made with the skimmer scoop in the beginning of the excavation would be about fifteen per cent. I do not mean by that fifteen per cent below the grade line. I mean fifteen per cent of the total amount of the dirt removed. The swinging scoop instroke ditcher I would say removed about thirty-three and one third per cent of the total amount of the dirt removed. The manner in which the teams or wagons approached the machine when they went into the excavation, is that they back in at the start of the excavation, and after they got down the incline they headed in, turned around and backed in along side of the machine parallel. I don't know whether any breaks or fractures developed at the corners of the drop bottom skimmer scoop. There was nothing persistent encountered due to counterwise springing of the body and the consequent disengagement of the latch. There was accidental unlatching due to the flexure of the scoop. The scoop did not have any bridging structure between the side walls except the rear end wall. I don't know if the bottom could be closed when the stick was in the position of forty-five degrees beyond the vertical. You say you mean while it was hanging in that position. The bottom can be closed if it isn't hanging.

Q. What do you mean by hanging? A. I mean with the scoop or stick or any part of the mechanism not touching the ground, being held up by the machine.

Q. Now do you mean that the bottom could be closed when the entire scoop structure is supported in the air and positioned 45 degrees beyond the vertical? A. I don't know about that.

(Narrative continued.) I don't know whether the bottom was ever closed by snagging the teeth on the floor of the excavation, I never seen it done. As to whether or not it is true that three different forms of latches

were tried, if you mean by the latch, also the tripping mechanism, I would say that there were at least three. I believe it was the last form of latch that was used that the driver on the wagon tripped. There was no line on this latch. It was tripped by the driver who took hold of the place where the line was supposed to be fastened, when the long line was in use which at first went back to the tripper. It was found that the driver could trip it as well from his seat on the wagon so the line was detached. I don't know whether the standard side tooth employed in the skimmer scoop actually protected the pivot bolt in the bottom, in either the skimmer scoop, or the drop bottom scoop supported on the ditcher stick by the instroke ditcher. I don't know whether the standard side tooth would actually cut a clearance sufficient to protect the bottom pivot bolt or the other protruding beyond the outer walls of the scoop. In the first form of latch that was used on the drop bottom scoop mounted on the instroke ditcher stick the man who operated the latch when the ditcher stick or scoop was in the hole, he was on the edge of the hole paying out or taking in lines, then as the scoop came around with the load of dirt he got around on the opposite side of the wagon from the operator's position. He unlatched the scoop at this point.

Q. Will you please state whether or not any other difficulties were encountered in the structure or mode of operation of the drop bottom ditcher scoop supported on the instroke ditcher stick apart from those heretofore enumerated, such as the latch? A. Outside of at first we had a little trouble with our hinges but after they started to grease them they had no more trouble that I know of. That's all I know of.

Q. Did either of the operators who were handling the drop bottom scoop attached to the stick of the instroke ditcher as a matter of fact strike a gravity blow with this apparatus? A. Yes.

Q. Was there any outward bowing of the side walls or inward distortion of the rear end wall when such a blow was struck? A. I don't know, I never noticed any.

Q. Will you state please how the latch acted when the blow was struck? A. I never noticed any action at all.

Q. How great a blow was struck? By that I mean what distance was the scoop permitted to fall? A. I couldn't answer that. I'm not a qualified operator at all.

Q. You have stated that a gravity blow was struck, now do you recall whether the bucket was permitted to fall over say a foot? A. Well I never noticed any difference in the way they used that bucket and the way they used what was then the standard pull scoop. It looked as if sometimes it would fall three or four feet, but it's hard to tell sometimes how far it's falling by observation on account of the friction control.

Q. Did you ever see the operator deliberately strike a gravity blow of three or four feet and repeatedly do so on limestone for the purpose of fracturing the same, during this excavation at the Joplin Supply? A. No, sir.

Q. Did you ever see the operator deliberately strike a gravity blow of any height for the purpose of fracturing limestone? A. I've seen him strike a gravity blow or what looked like a gravity blow for the purpose of breaking up or dislodging boulders, I don't know whether limestone or not.

Q. Did you see the operator strike a gravity blow upon a boulder and with such accuracy and force as to break it up? A. I don't remember of ever seeing him do that.

Deposition closed.

(Certificate of Notary omitted.)

Mr. Mahoney: The depositions of Phil Culbertson, W. L. Culbertson, John Cummings, M. A. Elsner and Lysle L. Hazen are all offered in evidence, as well as the exhibits that were offered during the taking of those depositions.

Mr. Mahoney: The next deposition is an important deposition, Your Honor, but I will go through with it as briefly as I can.

The Court: Well, if it is important, you read it, all of it.

Mr. Mahoney: Your Honor, in order to clear up the record here I notice in checking up that there are some of the depositions that were not offered, according to the record, so Defendant's Exhibits 34, 35, and 36, that were offered in connection with the Wagner deposition, which was read here yesterday, Frank H. King and Exhibits Nos. 53, 54 and 55, are hereby offered in evidence, and the deposition of

offered in connection with the taking of that deposition, are hereby offered in evidence; Defendant's Exhibit No. 15 in connection with the deposition of William E. Stein, is hereby offered in evidence; the deposition of Joseph Moschenrose is hereby offered in evidence; the deposition of George Stone is hereby offered in evidence. The Exhibit No. 18 that was used in connection with the deposition of Thomas G. Dunn is hereby offered in evidence, and the exhibits that were used in connection with the Bernard R. Clutter deposition this morning, Nos. 24, 25, 26 and 27, are hereby offered in evidence, and Defendant's Exhibit No. 28 offered in evidence with the deposition of Mr. Elsner, is also hereby offered in evidence,

The deposition of Herbert H. Wallower is also offered in evidence.

United States Circuit Court of Appeals

FOR THE SIXTH CIRCUIT.

No. 964.

GENERAL EXCAVATOR COMPANY,
Appellant,

vs.

KEYSTONE DRILLER COMPANY,
Appellee.

KEYSTONE DRILLER COMPANY,
Cross-Appellant,

vs.

GENERAL EXCAVATOR COMPANY,
Cross-Appellee.

No. 965.

THE OSGOOD COMPANY,
Appellant,

vs.

KEYSTONE DRILLER COMPANY,
Appellee.

KEYSTONE DRILLER COMPANY,
Cross-Appellant,

vs.

THE OSGOOD COMPANY,
Cross-Appellee.

APPEALS FROM THE UNITED STATES DISTRICT COURT,
FOR THE NORTHERN DISTRICT OF OHIO,
WESTERN DIVISION.

TRANSCRIPT OF RECORD
VOLUME II
TESTIMONY AND APPEAL PLEADINGS

NAMES AND ADDRESSES OF COUNSEL
(Inside Front Cover)

INDEX

VOLUME II

NARRATIVE STATEMENT OF EVIDENCE
UNDER EQUITY RULE 75

Cases Nos. 964 and 965

DEPOSITIONS FOR DEFENDANTS
(Continued)

Taken at Leadville, Colorado
(March 24, 1930)

Notices of Taking Testimony 609

Herbert H. Wallower:

Direct Examination by Mr. Mahoney 610

Cross Examination by Mr. Edgerton 613

DEFENDANTS' TESTIMONY IN OPEN COURT
(Continued)

George A. Gretser:

Direct Examination by Mr. Mahoney 617

Cross Examination by Mr. Richey 619

Re-Direct Examination by Mr. Mahoney 620

Walter Ferris:

Direct Examination by Mr. Corbett 621

DEPOSITIONS FOR DEFENDANTS
(Continued)

Taken at Columbus, Ohio
(December 30, 1930)

Notices of Taking Testimony 652

W. R. Lawrence:

Direct Examination by Mr. Mahoney 653

Ben S. Thompson:
Direct Examination by Mr. Mahoney 654

Clarence Yardley:
Direct Examination by Mr. Mahoney 655
Cross Examination by Mr. Edgerton 659

DEFENDANTS' TESTIMONY IN OPEN COURT
(Continued)

Walter Ferris (Resumed):
Direct Examination by Mr. Corbett 660
Direct Examination by Mr. Reed 675

DEPOSITIONS FOR DEFENDANTS
(Continued)

Taken at Cleveland, Ohio

(November 19, 1930)

Notices of Taking Testimony 680

William C. Bolgiano:
Direct Examination by Mr. Mahoney 681
Cross Examination by Mr. Edgerton 686
Re-Direct Examination by Mr. Mahoney 687

George Fay:
Direct Examination by Mr. Mahoney 687
Cross Examination by Mr. Edgerton 691

J. M. Rice:
Direct Examination by Mr. Mahoney 692
Cross Examination by Mr. Edgerton 693
Re-Direct Examination by Mr. Mahoney 694
Re-Cross Examination by Mr. Edgerton 695

DEFENDANTS' TESTIMONY IN OPEN COURT
(Continued)

Walter Ferris (Resumed):
Direct Examination by Mr. Reed 696
Direct Examination by Mr. Corbett 703
Direct Examination by Mr. Reed 704
Cross Examination by Mr. Richey 705
Re-Direct Examination by Mr. Corbett 725
Re-Cross Examination by Mr. Richey 728

DEPOSITIONS FOR DEFENDANTS
(Continued)
Taken at Lakewood, New Jersey
(October 21, 1930)

Notices of Taking Testimony 735
Bernard R. Clutter:
Direct Examination by Mr. Mahoney 736
Cross Examination by Mr. Edgerton 755
Re-Direct Examination by Mr. Mahoney 763

Taken at Akron, Ohio
(October 24, 1930)

Notices of Taking Testimony 767
Frederick W. Ransom:
Direct Examination by Mr. Mahoney 768
Cross Examination by Mr. Edgerton 771

PLAINTIFF'S REBUTTAL TESTIMONY.
IN OPEN COURT

Orley D. Hanshew:
Direct Examination by Mr. Siggers 779
Cross Examination by Mr. Corbett 791
Paul Sessions:
Direct Examination by Mr. Richey 792

E. M. Morrison:
Direct Examination by Mr. Edgerton 795

Howard H. Elmire:
Direct Examination by Mr. Edgerton 796
Cross Examination by Mr. Williams 800
Re-Direct Examination by Mr. Edgerton 817
Re-Cross Examination by Mr. Corbett 817

Rex R. Downie:
Direct Examination by Mr. Richey 818

W. A. McElhany:
Direct Examination by Mr. Richey 868
Cross Examination by Mr. Corbett 873

DEPOSITION FOR PLAINTIFF

Taken at Toledo, Ohio

(March 17, 1931)

Samuel B. Markley:
Direct Examination by Mr. Edgerton 875
Cross Examination by Mr. Corbett 881

DEFENDANTS' CASE

(Continued)

DEPOSITIONS FOR DEFENDANTS

Taken at South Milwaukee, Wisconsin

(April 29, 1931)

Notices of Taking Testimony 890

William M. Bager:
Direct Examination by Mr. Mahoney 891
Cross Examination by Mr. Edgerton 902

Werner Lehman:
Direct Examination by Mr. Mahoney 910
Cross Examination by Mr. Edgerton 912

N. A. McGrath:
Direct Examination by Mr. Mahoney 913
Cross Examination by Mr. Edgerton 917

C. A. Kelly:
Direct Examination by Mr. Mahoney 918
Cross Examination by Mr. Edgerton 920
Re-Direct Examination by Mr. Mahoney 921

Andrew Vahldieck:
Direct Examination by Mr. Mahoney 921

Noel S. Hayward:
Direct Examination by Mr. Mahoney 922
Cross Examination by Mr. Edgerton 923
Re-Direct Examination by Mr. Mahoney 924

D. P. Eells:
Direct Examination by Mr. Mahoney 924
Cross Examination by Mr. Edgerton 931

Carlyle Brinkman:
Direct Examination by Mr. Mahoney 931
Cross Examination by Mr. Edgerton 933

J. H. Imse:
Direct Examination by Mr. Mahoney 933

H. O. Jacobsen:
Direct Examination by Mr. Mahoney 934
Cross Examination by Mr. Edgerton 934

PLAINTIFF'S REBUTTAL TESTIMONY
(Continued)

Rex R. Downie (Recalled):
Direct Examination by Mr. Richey 989
Cross Examination by Mr. Corbett 955
Cross Examination by Mr. Reed 956

Robert C. Sessions:
Direct Examination by Mr. Richey 957
Direct Examination by Mr. Edgerton 958
Cross Examination by Mr. Corbett 979

DEFENDANT'S SURREBUTTAL TESTIMONY

IN OPEN COURT

Walter Ferris:
Direct Examination by Mr. Corbett 982
Cross Examination by Mr. Richey 984

PLAINTIFF'S REBUTTAL TESTIMONY
(Continued)

Rex R. Downie:
Direct Examination by Mr. Richey 985
Colloquy between Court and Counsel 986

Rex R. Downie (Recalled):
Direct Examination by Mr. May 988
Cross Examination by Mr. Williams 1017
Re-Direct Examination by Mr. May 1039
Re-Cross Examination by Mr. Williams 1040

DEFENDANT'S SURREBUTTAL TESTIMONY
(Continued)

Horace B. Fay:
Direct Examination by Mr. Corbett 1041
Cross Examination by Mr. Richey 1043
Re-Direct Examination by Mr. Corbett 1045
Re-Cross Examination by Mr. Richey 1062

PLAINTIFF'S REBUTTAL TESTIMONY
(Continued)

Philip E. Siggers:

Direct Examination by Mr. May 1046

Cross Examination by Mr. Williams 1050

Rex R. Downie (Recalled):

Direct Examination by Mr. May 1051

Colloquy of Court and Counsel 1063

CONSOLIDATED

Cases Nos. 964 and 965

Memorandum Opinion of Hahn 1067

Clutter Patent No. 1,317,431 1068

The First Downie Patent, No. 1,511,114 1068

The Second Downie Patent, No. 1,543,250 1068

The Third Downie Patent, No. 1,709,466 1071

The Fourth Downie Patent, No. 1,716,432 1072

Suppression of Evidence as to Downie Patent No. 1,511,114 1073

Period About Latter Part of 1919 and Early Part of 1920 1074

Proceedings After the Completion of the Joplin, Missouri, Work 1076

Two Conferences Between Rex R. Downie and Bernard Clutter, One Under Date of April 16, 1925, and One Prior Thereto 1077

Summary of Second Deposition of Bernard Clutter, Taken October 1, 1930 1078

Summary of Testimony of Howard H. Elmire 1080

Summary of Testimony of Rex R. Downie 1081

Testimony and Exhibits Relating to the Purchase of Two Excavators 1082

New Agreement Before Shovels Had Been Repossessed 1085

Was the Testimony as to What Was Done at Joplin, Missouri, Relevant and Material 1087

Conclusions 1088

Was Any Fraud Sought to be Perpetrated Upon This Court in the Trial of These Cases 1097

APPEAL PAPERS
In Case No. 964

Motion and Order Granting Plaintiff Leave to File Chart of Downie Patent 1,709,466 as Plaintiff's Exhibit No. P-77 (Jun. 26, 1931) 1101

Request for Findings of Fact and Conclusions of Law (Jul. 15, 1931) 1101

Findings of Fact (Jul. 15, 1931) 1102

Conclusions of Law (Jul. 15, 1931) 1104

Interlocutory Decree (Jul. 21, 1931) 1107

Petition for Appeal (Jul. 28, 1931) 1111

Assignment of Errors (Jul. 28, 1931) 1111

Order Allowing Appeal and Granting Supersedeas (Jul. 29, 1931) 1114

Supersedeas Bond on Appeal (Jul. 29, 1931) 1115

Citation on Appeal (Jul. 29, 1931) 1117

Petition for Cross Appeal (Aug. 7, 1931) 1119

Assignment of Errors on Cross-Appeal (Aug. 7, 1931) 1119

Order Allowing Cross-Appeal (Aug. 10, 1931) 1121

Bond on Cross-Appeal (Aug. 13, 1931) 1122

Citation on Cross-Appeal (Aug. 14, 1931) 1125

Order Extending Time to Sept. 15, 1931, Within Which to Lodge Narrative of Testimony (Aug. 22, 1931) 1127

Order Extending Time to Sept. 28, 1931, for Filing Transcript of Record (Aug. 22, 1931) 1127

Motion to Extend Time to Oct. 28, 1931, to File Transcript of Record (Sept. 24, 1931) 1127

Affidavit of Edward L. Reed in Support of Motion (Sept. 24, 1931) 1128

Order Extending Time to Oct. 28, 1931, for Filing Transcript of Record (Sept. 24, 1931) 1129

APPEAL PAPERS

In Case No. 965

Motion for Entry of Prompt Decree (Jun. 25, 1931) 1130

Request for Findings of Fact and Conclusions of Law (Jun. 11, 1931) 1131

Findings of Fact (Jun. 11, 1931) 1132

Conclusions of Law (Jun. 11, 1931) 1135

Interlocutory Decree (Jul. 21, 1931) 1137

Petition for Appeal (Jul. 28, 1931) 1140

Assignment of Errors (July 28, 1931) 1141

Order Allowing Appeal with Supersedeas (Jul. 29, 1931) ... 1145

Bond on Appeal (Jul. 29, 1931) 1145

Citation on Appeal (Jul. 29, 1931) 1147

Petition for Cross-Appeal (Aug. 7, 1931) 1149

Order Allowing Cross-Appeal (Aug. 10, 1931) 1151

Bond on Cross-Appeal (Aug. 13, 1931) 1152

Citation on Cross-Appeal (Aug. 14, 1931) 1155

Order Extending Time to Sept. 15, 1931, Within Which to Lodge Narrative Form of Testimony (Aug. 22, 1931) ... 1157

Order Extending Time to Sept. 28, 1931, for Filing Transcript of Record (Aug. 22, 1931) 1157

Motion to Extend Time to Oct. 28, 1931, to File Transcript of Record (Sept. 24, 1931) 1158

Exhibit A. Affidavit of John J. Mahoney in Support of Motion (Sept. 24, 1931) 1159

Order Extending Time to Oct. 28, 1931, for Filing Transcript of Record (Sept. 24, 1931) 1160

CONSOLIDATED

Cases Nos. 964 and 965

Consolidated Praecipe for Transcript (Sept. 16, 1931) 1160

Papers in Equity Cause No. 964 1161

Papers in Equity Cause No. 965 1164

Papers and Records Common to Causes Nos. 964 and 965 1167

Papers in Equity Cause No. 964 1167

Papers in Equity Cause No. 965 1168

Papers Common to Equity Causes Nos. 964 and 965 1169

Proof of Service 1169

Stipulation re Withdrawal of Exhibits (Sept. 24, 1931) 1170

Order Withdrawing Certain Exhibits (Sept. 24, 1931) 1171

Stipulation and Order Re Amendments or Objections to Narrative Form of Testimony (Sept. 25, 1931) 1172

Plaintiff's Additional Praecipe for Transcript—Consolidated (Sept. 26, 1931) 1173

Papers in Equity Cause No. 964 1173

Papers in Equity Cause No. 965 1173

Stipulation Re Certification of Record (Sept. 26, 1931) 1174

Stipulation and Order Re Patents (Oct. 14, 1931) 1175

Order Extending Time to Nov. 21, 1931, for Filing Transcript of Record in the United States Circuit Court of Appeals 1176

Certificate of Clerk 1177

DEPOSITION FOR THE DEFENDANTS

Taken at Leadville, Colorado.

NOTICE OF TAKING TESTIMONY.

MR. PHILIP E. SIGGERS,
918 F Street, N. W.,
Washington, D. C.

MESSRS. RICHEY & WATTS,
1090 Union Trust Building,
Cleveland, Ohio.
Attorneys for Plaintiff:

Please take notice that the defendant herein will take the testimony of Herbert Wallower, 815 Harrison Avenue, Leadville, Colorado, who resides more than one hundred (100) miles from the place of trial herein, for use on behalf of the defendant at the final hearing of this cause, before Loretta Walsh, a Notary Public in and for the County of Lake, Colorado, who is not of counsel nor interested in this cause, at the office of Loretta Walsh, Room 20 Emmett Block, Leadville, Colorado, on the 24th day of March, 1930, at ten o'clock a. m., and thereafter from day to day as the taking of the deposition may be adjourned; and such testimony will be taken in accordance with the provisions of Sections 863, 864 and 865 of the Revised Statutes of the United States and the Federal Equity Rules.

You are invited to attend and cross examine.

EDWIN P. CORBETT,
Attorney for Defendant.

Dated at Columbus, Ohio, this 14th day of March, 1930. Service acknowledged March 15, 1930.

RICHEY & WATTS.

PRINTER'S NOTE:

A like Notice was issued on behalf of The General Excavator Company and was signed by Mr. Edward L. Reed.

The following deposition was taken on behalf of both defendants, pursuant to the above notice, at the office of Loretta Walsh, a notary public, Room 20 Emmett Block, Leadville, Colorado, commencing at ten o'clock a. m., on the 24th day of March, 1930. Counsel for all parties being present.

HERBERT H. WALLOWER, a witness called by defendants, being first duly sworn, testified as follows:

DIRECT EXAMINATION by Mr. Mahoney.

My name is Herbert H. Wallower. I reside at Leadville, Colorado. I am thirty-eight years of age. I am a mine operator. I have lived in Joplin, Missouri. The period I lived there was from June, 1919, until August, 1920. I was once one of the partners of Wallower Brothers in Joplin, Missouri. I am testifying under subpoenas in these cases. Wallower Brothers had the sub-contract for the excavation of the Joplin Supply Company basement, Third and Joplin Streets, Joplin, Mo. I was superintendent in charge of operation on this work. We used an excavation machine, a Keystone shovel to do the excavation work on the basement for this building. The first attachment used on this machine when we started the work on this excavation was called a skimmer scoop. The excavation was partly completed with the skimmer scoop and completed by means of another attachment. We changed from the skimmer scoop attachment to the other attachment on account of mud and water in the bottom of the excavation, and on account of the difficulty in getting the teams and wagons out of the excavation. It was necessary to remove the machine from the excavation and complete it by operating a machine from the surface. The machine that was used on the surface was a standard ditcher scoop attachment manufactured by the Keystone Driller Company and it was called an instroke ditcher scoop. Defendant's Exhibit No. 24 represents the type of attachment that was used when the machine was removed from the excavation to the surface. This attachment had a pivoted scoop.

The progress of the work was much impeded by the use of this instroke pivoted scoop attachment on the machine. In tripping the latch on the pivoted bucket it was difficult to control the dumping at its intended place and resulted in much spillage of the spoil and wreckage of the dump wagons. Bernard R. Clutter was operating this machine for us on this Joplin Supply Company job. He was a competent operator. I recall that we were able to overcome the difficulties we were having with this type of attachment having the pivoted scoop thereon. To overcome these difficulties I removed, or had removed, the attachments to the standard skimmer scoop and

devised a method whereby it could be rigidly attached to the bottom end of the ditcher stick with the open end of the scoop directed towards the machine, and so that it could be used in an instroke manner, utilizing the drop bottom of the scoop. The drop bottom was used to dump or unload the dirt in the scoop. When I have been referring to the skimmer scoop that was rigidly attached to the instroke ditcher stick I meant the type of skimmer scoop shown in Figure 1 of the drawings of the patent Defendant's Exhibit 25.

Referring to the skimmer scoop shown in the drawings Figure 1 of Defendant's Exhibit 25 the parts of the skimmer scoop which were removed when the skimmer scoop was adapted for use on the instroke ditcher stick were numbers 47, 48, 49, 50, 55 and the part marked 44. The skimmer scoop was taken to the shops of the Keystone Driller Company at Joplin, Mo., to have the changes made adapted to the instroke ditcher stick. The changes about which I have testified were made by the Keystone Driller Company insofar as they were made in their own shops but under my direction. The blue print Defendant's Exhibit 26 represents substantially the type of attachment that was used on this excavating job. This blue print shows substantially the manner in which I directed the skimmer scoop to be attached to the instroke ditcher stick so that the scoop was used as a rigidly attached drop bottom bucket. The skimmer scoop bucket was rigidly held on the instroke ditcher stick as follows, referring to Defendant's Exhibit 26. The back side of the scoop was attached to the bottom of the ditcher stick by a pivoted pin, which was also used in connection with its use as the standard form of instroke ditcher. To the sides of the scoop on its forward upper end there were attached angle braces joined to the ditcher stick at a point above the scoop. These constituted the elements making the scoop rigid to the ditcher stick and rendered the lower pivotal bearing inoperative. The purpose of the block shown on the drawing between the guide member and the ditcher stick may be explained as follows. When used as a standard instroke ditcher, for purpose of dumping the bucket, the pin connecting the two angle braces at their upper end was designed to slide in a slot between a guide and the ditcher stick, so that in order to make the scoop rigid it was necessary to fill the slot with a block of wood in order to make the upper connecting pin of the angle braces immovable and hence result in

the scoop becoming a rigid member. The drawing Defendant's Exhibit 26 shows substantially the same manner in which the bottom was dropped in dumping when rigidly attached to the instroke ditcher stick. That is my signature on that blue print. This drop bottom scoop rigidly attached to the instroke ditcher stick on the Keystone excavator was actually used in the excavation of the Joplin Supply Company basement at Joplin, Missouri.

The machine as rigged up with the attachments last described by me was operated the greater portion of the time by Bernard R. Clutter and part of the time by John Cummings. The bottom was closed when this drop bottom bucket rigidly attached to the instroke ditcher stick was used, by a combination of operation of the pull line and lifting line a motion was imparted to the scoop whereby by the momentum of the open swinging bottom there automatically resulted the snapping shut of the bottom, being engaged by the latch at the back of the scoop. As I recall this Keystone machine was used on the Joplin Supply Company job, having a drop bottom scoop rigidly attached to the instroke ditcher stick, approximately six or seven weeks. The excavation work by our firm on this Joplin Supply Company job was completed about the middle of March, 1920. Defendant's Exhibit No. 28 which has been handed me is a photostatic copy of a paper dated March 18, 1920. I believe this represents the final statement tendered by Wallower Brothers to C. A. Dieter for services rendered. The services rendered was the work of completing the excavation of basement, for the Joplin Supply Company building at Third and Joplin Streets, Joplin, Mo. The statement is receipted as having been paid in full by C. A. Dieter to Wallower Brothers, and I believe that is correct.

The Keystone excavator having the rigidly attached drop bottom scoop on the instroke ditcher stick accomplished the excavation work as compared to the pivoted type of instroke bucket that had been previously used on this job, in a greatly improved manner. This work was improved by this rigidly attached drop bottom bucket on the instroke ditcher stick, by facilitating the dumping of sticky, clayey and other material from the scoop, and also by being able to more accurately dump the material in the wagons with less spillage and less delay than was formerly encountered.

After the Joplin Supply Company job was finished, the machines were stored for several months and then disposed of by sale, but I do not recall to whom they were sold, nor do I recall what disposition was made of the attachments. After this job was closed there were no immediate prospects for use of the machine in the same manner as used on this job. That was the reason we offered them for sale. As I recall the skimmer scoop which was used as a rigidly attached drop bottom bucket on this instroke machine had side rake teeth that were attached only to the drop bottom of the scoop.

I recall that there were frequently various employees of the Keystone Driller Company observing the performance of the excavator employing the use of the rigidly attached drop bottom instroke ditcher scoop on this Joplin Supply Company job at Joplin, Mo. I recall the names of Mr. Oliver and Mr. Lysle Hazen who saw this drop bottom ditcher scoop in operation and who were I believe general manager and shop superintendent respectively of the Keystone Driller Company.

Cross Examination by Mr. Edgerton.

I would say approximately sixty per cent of the excavation on the Joplin Supply Company basement was made by the use of the skimmer scoop of the type first employed. I would say that approximately five per cent of this excavation was completed by the standard instroke ditcher of the type illustrated in Defendant's Exhibit No. 24, which is the pivoted bucket. I believe the name of the fireman on this machine when the standard instroke ditcher attachment was used was John Cummings. The latch and dumping cable on the standard instroke ditching machine was operated by either John Cummings or the team foreman. I wish to correct this statement. As I recall, the latch mechanism on the standard form of pivoted instroke ditcher was operated by the shovel operator himself. Two machines were used on the excavation of the Joplin Supply Company basement, part of the time.

Q. Referring now to the rigidly attached drop bottom bucket on the stick of the instroke ditcher will you please state whether or not you encountered any difficulties with the latching mechanism after the scoop was mounted upon the stick? A. It was found that the latch mechanism as formerly used on the skimmer scoop was

not entirely satisfactory, and it was modified and changed somewhat to a more satisfactorily working mechanism.

Q. Is it not true that several modifications were made in the latching mechanism? A. Some minor subsequent changes were made until the latch mechanism was reduced to a satisfactory operative condition.

Q. Will you please describe the manner in which the final form of latch was operated to release the spoil from the bucket? A. I am unable to recall the details of latch mechanism as finally evolved.

Q. Do you remember where the operator stood or was positioned who released the latch in the final form of mechanism employed? A. It was necessary to have a man present at the side of the machine in order to direct the position of wagons to be loaded and to perform incidental work about the machine so that it was convenient for him to operate the latch mechanism by means of a rope to the point he was accustomed to stand in directing the teams so that it was not considered advisable to detract the attention of the machine operator by tripping the bottom of the bucket.

Q. Do you remember how long that tripping rope was? A. As I remember, the rope was about twenty-five (25) feet long, but the latch was operated at varying distances from the scoop.

Q. Will you explain please how you prevented this rope from becoming entangled with the teeth of the scoop during an excavating cycle? A. Ordinarily the workman who operated the latch stood at a position in front of the horses attached to the wagon and consequently back of the scoop during its digging operation so that the rope was always at a point remote from the teeth and therefore did not become entangled.

Q. And I take it that this operator kept hold of the rope and paid it out during the movement of the scoop, is that right? A. That is correct, and also recovered it as the scoop swung toward him.

Q. And this was the final mode of operation you used? A. Yes.

Q. Did you ever encounter any difficulty with the hinges on the drop bottom bucket? A. The pivot hinges for the drop bottom? No, not as I remember.

Q. Did the bucket ever spring crosswise and prevent the latch from holding? A. Very rarely after the latch mechanism was improved. Not sufficiently often to warrant any additional stiffening device.

Q. Was the bucket transversely braced to prevent springing or warpage adjacent its open end? A. No, it was not considered necessary.

Q. Did the Keystone Company provide the block of wood that was inserted to block the sliding latch as illustrated in Defendant's Exhibit 26? A. They did not as I remember.

Q. This block then was put on the attachment after the bucket was returned to the job, was it not? A. Either then or while waiting for the scoop to be returned from the shop.

Q. Was it not inserted after the machine had been in operation and it was found that the clamping of the brace bars were inadequate? A. I believe the latch mechanism as used on the standard form of instroke ditcher was found to be inadequate to make the position of the scoop rigid with respect to the ditcher stick on account of its worn condition so that the block of wood was inserted in order that there be no movement of the sliding pin. I believe the attachment was used first utilizing the latch mechanism only for rigidity and then was changed according to the foregoing.

Q. Do you recall any othe difficulties encountered with the drop bottom bucket rigidly attached to the instroke ditcher stick? A. No.

Q. Is it not a fact that the excavating machine provided with the standard skimmer scoop was put back into the excavation to finish up the job before the completion thereof? A. I believe that is true, for the purpose of cleaning up some dirt left by previous excavating.

Q. You had two excavating buckets of the drop bottom type made, one to fall back on in case of breakage, did you not? A. Both excavating machines used were equipped with a skimmer scoop, which provided a spare scoop for emergency when using one machine. Any piece of equipment is subject to wear and tear, such as wearing out of teeth or wear of rivets, etc., and it was considered advisable to have a spare scoop ready for use.

Q. Referring again to the drop bottom bucket which was rigidly attached to the ditcher stick, was the latch mechanism ever reduced to a positively acting form? A. I would say that the latch mechanism as developed fulfilled requirements for completing the operation as was required, by the sub-contract in question.

Q. Was the latch reduced to a properly protected form? A. I do not understand your question.

Q. As finally employed was the latch mechanism free from wear occasioned by engagement with the material in which it was working? A. I believe there was a strip of iron riveted to the bottom of the scoop in such a way as to prevent direct contact between the material excavated and the latch mechanism.

Q. But you are not sure about that? A. I believe I can definitely state that to be a fact.

Q. Did the side rake teeth to which you referred in direct examination and which were located on the bottom of the scoop as a matter of fact, protect the pivot hinge? A. As I remember the side rake teeth were flared outwardly providing a certain clearance beyond the sides of the scoop and served to protect the hinges for the bottom.

Q. Do you know whether the angle of the flared out teeth was great enough to cut a clearance for the protuberances beyond the outer sides of the scoop? A. I do not remember what the full clearance was.

Q. At the completion of the basement for the Joplin Supply Company, did you abandon further work on the scoop? A. I do not quite understand the meaning of the word abandon as referred to.

Q. Well, did you do any more work on the scoop of the type having a drop bottom and rigidly attached to the instroke ditcher stick? A. On the completion of the job, there was no further necessity of doing any work on the scoop.

Q. I'm sorry, but you haven't answered my question? A. I believe this answers your question.

Q. Then I take it that you did not do any further work on the scoop? A. That is true.

Q. And never saw this scoop in operation again? A. Do you mean this particular scoop or others of the same type?

Q. I mean either of the two scoops you used on the Joplin Supply Company job? A. As explained before on completion of this job the machines were stored and later sold and attachments also disposed of so that I never saw these particular scoops again.

Q. And you returned to Keystone for credit as many of the regular Keystone ditcher parts as were undamaged by the experimentation.

Mr. Mahoney: I object to the use of the word "experimentation" because the testimony of this witness shows that there was nothing experimental about the use of the rigidly attached drop bottom scoop on the instroke

ditcher on the Joplin Supply Company job because it has been shown by the testimony that the said attachment successfully completed an excavation that a Keystone device put out as a commercial piece of equipment was unable to do.

A. I do not remember what parts were returned for credit as I had nothing to do with this transaction.

Q. Will you describe please the character of the soil encountered in the Joplin Supply excavation job? A. The surface consisted of a tightly packed black top soil underlain by clay through which there were some streaks of gravel and shaley material. At the bottom of the excavation a bedding of limestone was encountered which in some places extended above the required depth of excavation. Some of the limestone could be excavated by use of the machine, other portions had to be broken up by shooting.

Q. Shooting is blasting, is it not? A. Yes.

Deposition closed.

(Certificate of Notary omitted.)

GEORGE A. GRETSER, a witness called by defendants, being first duly sworn, testified as follows:

DIRECT EXAMINATION by Mr. Mahoney.

My name is George A. Gretser. I am forty-seven years of age. I am service manager for the Osgood Company. I reside at 238 East Washington Avenue, Marion, Ohio. I have been connected with the Osgood interests 29½ years; ten years with the Osgood Dredge Company at Albany and the other 19½ years with the present organization at Marion, Ohio. The present organization of The Osgood Company at Marion, Ohio, purchased the old Osgood Dredge Company. The tracing which has just been handed me is a drawing for the dipper handle, of the dipper used on a phosphate excavator built in 1884 for the Pacific Guano Company, South Carolina.

Mr. Corbett: Your Honor, this has a bearing on the spacing of the channel and members of the ditcher stick, which is involved here.

The Witness: The home office of that company, by the way, though, was Boston, Mass.; the operation of the machine was in South Carolina.

(Narrative continued.) I have records to show that a dipper handle like that shown in this tracing was manufactured and sold by the Osgood Dredge Company. The tracing bears the machine number 157 which was sold under a contract which I have here to this Pacific Guano Company at Boston, and I have blue prints back there of the record that show that that was used on that machine. As to when this machine was paid for I have a bond that was canceled in September, 1885, between the Pacific Guano Co., Boston, Mass., and the Osgood Dredge Company of Albany, New York. This bond was conditioned that if the Osgood Dredge worked up to specifications to the contract, that the company would receive full payment, and this bond would be void. There is a red notation on the bond that shows it was canceled by fulfillment of the contract and payment of the money in full. The records I have just referred to were taken from the regular files of the Osgood Company. They are the original blue print records of the old Osgood Dredge Company at Albany, New York, and have been under my personal supervision and custody for—well, 27 of the 29 anyway. This other tracing which has just been handed me is of a dipper and handle of practically the same construction. The dipper is of the same construction, the handle being a little heavier than the other tracing which was 358 I believe. This one is drawing 484 and was used on three machines in addition to the original No. 157. A handle like this was furnished as a repair for 157 in addition. The Osgood Dredge Company's name was changed I believe in the year 1911; it was either 1910 or 1911, I couldn't swear which, but I think it was 1911. The Osgood Company of Marion, Ohio, purchased the old company out in 1911.

Mr. Mahoney: We will also offer a blue print in evidence for this, Your Honor.

Mr. Richey: What are you going to number these, Mr. Mahoney?

Mr. Mahoney: Well, we will number those the next Exhibit number.

Mr. Richey: This would be what?

Mr. Mahoney: This would be 68, and this will be 69.

(Narrative continued.) The exact or approximate date when both structures shown in Defendant's Exhibits 68 and 69 were manufactured and sold, the first drawing 358, used on machine 157, the machine was built in March, 1885. The other drawing there 484, that dipper and

handle was first used on machine 165 built in April, 1886. The one that I just gave you 165 was used again on machine 196. Those two machines I have just given, 157 and 165, were both for the same company, the Pacific Guano Company. That is the numbers of the machines. Then we built two more like this drawing 484; one was machine No. 196, built in June, 1891, and the other one was for machine 219, built in January, 1894, both for the Bolton Mines Company. The record to which I have been referring is an original record belonging to the old Osgood Dredge Company before the present Osgood organization purchased that company. This book is a recapitulation of the engine and various parts of the machine, and the costs which was carried by the general manager in making up estimates. This is the original record of John K. Howe, general manager of the old Osgood company. All of the machines show these structures here in these drawings 358 and 484 and were made and sold to the companies I have just mentioned prior to the time the present Osgood organization took over the old Osgood Dredge Company, according to the records which are the original records.

Mr. Mahoney: The drawing which has been identified by the witness, drawing No. 358, will be offered in evidence as Defendants' Exhibit 68, and the Osgood Dredge Company drawing No. 484, will be offered in evidence as Defendants' Exhibit 69, with the right to substitute blue prints for these original tracings.

The Court: Yes.

Cross Examination by Mr. Richey.

No, sir, I did not keep the records which I have just read from. In 1884 I was one year old. I was employed by the Osgood Dredge Company for ten years, and began to work for them in September, 1901.

Q. So everything you testified to here about this machine is just what you heard or deduced from the records you saw? A. Well, naturally; it was built before.

Q. You don't know of your own personal knowledge that these machines were built or sold, do you? A. Not from having had anything to do with them, no.

Q. Just from looking over these records? A. Well, from the fact that I have handled repair orders for the machines, I know the machines were in existence.

Q. But you never saw the machines? A. No.

Q. Now, you don't know whether these parts were used on inward arc machines or outward arc machines, do you? A. I don't just get what you mean.

Q. By the inward arc, or the outward arc, I mean the regular steam shovel that dug out like that.

The Court: Dug away from the machine.

Q. Dug away from the machine? A. Yes, that is the way those machines operated.

Q. You don't know whether or not they were actually used just as shown in these drawings, Exhibits 68 and 69, do you? A. Well, I presume so.

Q. But you don't know of your own knowledge? A. Yes, I am satisfied they were, because the parts we furnished for repairs would fit.

Q. But you never saw them in use? A. No, I never saw them in use.

Q. You don't know of your own knowledge whether they were used in the phosphate district or not, do you? A. Well, I just say that the names of the companies indicate that, and that the contracts state that they were handling that class of material.

Mr. Richey: I think all his testimony is immaterial, Your Honor; it don't amount to anything, anyway. We have no objection to the substituting of these blue prints, but we object to all the testimony.

Mr. Mahoney: Taken from the regular records, Your Honor, of this company, in the regular course of business.

RE-DIRECT EXAMINATION by Mr. Mahoney.

Q. Is the Osgood prepared at any time to supply orders for any of this equipment shown in these drawings?

Mr. Richey: I object to that as immaterial.

The Court: Well, trying to show the system, is all I suppose that shows.

A. Oh, certainly.

Q. And all these drawings were taken from the regular files of the Osgood Company, over which you have supervision and control, and you know that they came to the present Osgood Company from the old Osgood Dredge Company, which was purchased and absorbed by the present Osgood organization? A. Absolutely. I know that those have been in the same place, as I went to

work for them in 1901 and supervised the transferring of those records from Albany to Marion.

Mr. Corbett: Anything more, Mr. Richey?

Mr. Richey: No.

WALTER FERRIS, a witness called by defendants, being first duly sworn, testified as follows:

DIRECT EXAMINATION by Mr. Corbett.

My name is Walter Ferris. I am 63 years of age. I reside at Milwaukee, Wisconsin. I am Vice President of the Oil Gear Company. I am a mechanical engineer. As to my qualifications to testify with relation to the matters here in dispute, particularly my education and experience with mechanical matters are as follows. My mechanical training began with a four-year apprenticeship in a machine shop making paper machinery in Philadelphia, followed by two more years as machinist with the Link Belt Company, of Nicetown, Pennsylvania, making coal handling machinery. Then I entered Lehigh University at Bethlehem as a student in mechanical engineering, graduating in 1895. I then worked for about two years as assistant plant engineer, maintenance of rolling mill machinery in the Pencoyd Iron Works, near Philadelphia; then for approximately two years—I think it was a year and a half about—as mechanical engineer in charge of construction of mills and machinery for the Laflin & Rand Powder Company, which had plants at Kingston, New York, and in Wisconsin, and in Kansas. Then for about two years, more or less, I was working on my own account in the development of water meters for large city water pipes. That venture failed to pay, and I came to South Milwaukee, Wisconsin, in 1902, to take the position as draftsman with the Bucyrus Company, builders of excavating machinery of all types, or most types,—railway cranes, pile drivers, etc. About the following year I became chief draftsman, and later assistant chief engineer, and in 1911 chief engineer of the Bucyrus Company, in which position I remained until 1921, about the end of 1921. During my time as chief engineer of the Bucyrus Company we did some development work on attempting to find a way of transmitting power by pumping oil under pressure, with the idea of developing transmission machinery to operate excavating machine dippers or

scoops from gasoline engine drive. That development did not come to a mechanical success sufficient for its use on excavating machines, and in 1921, with some associates, we organized the Oil Gear Company to put this type of power transmission machinery on the general market. For the past ten years I have not been actively associated with the Bucyrus Company, but have given practically all of my time to the Oil Gear Co.

When I was with the Bucyrus Company I had a good deal of experience with patents and inventions and cooperated with attorneys in preparing patent applications. I took out several patents on my own account before going to the Bucyrus Company, on the water meter subject, and always, of course, more or less engaged in invention with the Bucyrus Company, and all of the patents taken out by the company after my connection with it as chief draftsman were taken out under my supervision. I don't know how many patents I have taken out. Somewhere between fifty and one hundred;—75 would be a guess.

The Bucyrus Company, when I was its chief engineer, was generally understood to be one of the two principal engineering concerns in the country, or in the world.

Q. What particular class of work—will you give some idea of the nature of the work that you were working on while you were chief engineer of the Bucyrus Company; what kind of excavating machinery, and where any of it was used, just briefly. A. Well, the first loading machines that were developed under my supervision particularly—I mean beginning with the time that I was chief draftsman when I had whole charge of the designing, was a line of large railway wrecking cranes. We built the first crane which would lift 100 tons, and later the first one which I think would lift 150 tons. We developed also railway pile drivers, which propelled under their own power; we did very extensive development of elevator bucket chain dredges for digging gold in California and Alaska; we were much the largest company in building gold digging dredges; we built all sizes, from 12 tons up—only one or two 12 tons—of outward digging steam shovels, what we call the railway type shovel, gradually developing up to 120 tons in weight, handling five or six yard dippers. We sold about 88 of those shovels to dig the Panama Canal. We later built three large dipper dredges for the Panama Canal which

were at that time I think the largest and heaviest dipper dredges ever built, handling 15 yard mud dippers and 10 yard rock dippers.

Q. Did you ever have any experience with coal stripping machinery or drag line devices? A. Yes. In about 1908 or '09, we began to take note of the tendency to go to the drag line—a revolving machine largely handling drag buckets, also capable of handling clamshell buckets, and other kinds. And we purchased at that time the business of a Chicago contractor of the name of James O. Hayworth, who had, in connection with his contracting, begun to make quite large drag line machines. That started us in the business of revolving machines which was actively developed from then on. In about 1910—these dates are a year or two uncertain—the Bucyrus Company purchased the business of the Vulcan Steam Shovel Company, of Toledo, and the Vulcan Company had just begun to put out rather large revolving shovels for coal stripping. Two or three of those shovels were in the field, giving some trouble, and we became responsible for them, and redesigned the line, and that started us in the large revolving shovels for coal stripping.

Q. Did you ever have anything to do with the designing of small revolving shovels? A. Yes; after purchasing the Vulcan Company, the concern was first reorganized as the Bucyrus Vulcan Company, and built a plant at Evansville, Indiana, for the building of small revolving shovels and machines exclusively. The engineering of that plant was also under my supervision, and we developed a line of small revolving shovels, beginning with about 15 tons weight, and going up to about 35 tons weight.

Q. Have you read the patent of Robert Rex Downie, No. 1,511,114, and have you read claims 6 to 14 of this patent? A. I have.

Q. Do you understand this patent, and the subject matter of these claims, in a general way? A. I think so.

The Court: Is that the drop bucket?

Mr. Corbett: That is the drop bucket.

Q. Please give your understanding of the subject matter of this patent, and particularly of claims 6 to 14 thereof, dealing with the subject matter of these claims in a general way, without taking up each individual claim. A. This shows the structure of the patent, as I

understand the question, and I have merely put it up to have (referring to chart on easel)—just let me have the question again.

(Question read.)

Q. In other words, just state the principal features of it. A. I would say that patent, in general, deals with a drop bottom bucket mounted on a ditcher stick or scoop-carrying member of an instroke ditching machine. The subject matter of the claims refers to the movements of the boom—a boom and its movement, a ditcher stick pivoted to the end of the boom, and operated by the hoisting line marked 18, and a digging line which has been cancelled—it looks as if it were 43. I will get the patent and see.

Q. Well, just call it a hauling line. That is clear enough. A. Digging line 43, operating the scoop 23, and having a bottom dumping door 25 through which the material excavated may be dumped, and controlled by the latch 35 and so on.

Q. Have you examined the prior art patents relating to this type of device sufficiently to say whether or not the idea of the scoop with a drop bottom door was old? A. I have.

Q. And if so, please discuss briefly a few of the patents that throw light on this question. A. A scoop with a drop bottom door is not new, but is old. The first example of this that I have on my list is a scoop covered in patent 493,421 to H. G. Butler.

Mr. Corbett: Your Honor, we are checking that to see whether that patent was used in the Cleveland suit.

A. (Continuing.) This scoop consists of the body side plates marked A, at the front of which is a U-shaped plow blade or cutter blade marked in general B.

Mr. Corbett: That patent was not in the Cleveland suit, Your Honor.

Mr. Richey: Is it in the answer here?

Mr. Corbett: It is a prior art patent, Mr. Richey; immaterial whether it is in the answer or not. It is prior art.

Mr. Richey: Well, I would like to have you say whether it was.

Mr. Corbett: Well, I really don't know.

Witness: It has a drop bottom door f, retained in load carrying position by a latch mechanism which is generally designed by d; it can be dropped to dump the

load. The bucket is specified to be carried and operated on the power machine by a suspension bale which is marked p. The bottom of this bucket is pivoted on a pin extending transversely across the bucket behind the plow or cutter B, and the side extensions of that cutter on the two sides of the bucket are formed to pass through the cut ahead of that pivot pin, thereby protecting it from damage from the sides of the cut.

Q. Any other patents that you have, Mr. Ferris? A. I have here a patent, reissue 11,516, reissued December 3, 1895, to W. Davy. This shows a scoop in which the side plates and the bottom are integral, so that when the bottom is dropped, the side plates are carried with it. It also is provided at its front end with a tooth structure or plow designated in general as—well, large F maybe, or large FC—I can't tell which from the drawing. There are side cutting lips extending all the way up the front end of this bucket on both sides, which are beveled inward to cut the sides of the—cut the material adjacent to the sides of the bucket and form a channel through which the bucket passes, and which will be wide enough not to wear on the pivot pins around which the structure revolves when dumping. This bucket is also retained in load-carrying position by a latched structure, generally indicated by f, and this latch structure is dumped by contact of a plunger mechanism, designated e, with the boom upon which the bucket is suspended. It is dumped by lifting the bucket up until this plunger strikes the boom, when the bucket will be tripped to dump.

Mr. Corbett: That Davy patent is not in the Cleveland suit, Your Honor.

(Narrative continued.) The chart drop bottom bucket is No. 806,288, patent to M. E. Pugh.

Mr. Corbett: That patent was in the Cleveland suit, Your Honor.

(Narrative continued.) In this bucket, the entire bottom is dumped, rotating around a pivot pin closely adjacent to the front or cutting end, and close down to the bottom of the bucket. It is retained in load-carrying position by a latch mechanism N-10, which is automatically dumped when the bucket is retracted into a position which tightens a chain attached to the hoisting sheave which lifts the bucket. This drop bottom carries digging teeth N-8, on its forward edge.

The next drop bottom bucket is shown, patent 1,107,899, issued to L. P. Clutter, August 18, 1914.

Mr. Corbett: That patent was in the Cleveland suit, Your Honor.

(Narrative continued.) This type is known as the skimmer scoop; also comprises a bottom dumping door 41, mounted on a pivot near the front end, and near the bottom of the scoop; and carrying at its forward ends earth-penetrating teeth 43. It is retained in load-carrying position by a latch mechanism 53, dropped by a dump line 55. This dumping line 55 has an extension 56, which was designed originally as a retracting line to enable the operator to swing the door shut.

The next one on the list is patent to Wagner, 1,225,537.

Mr. Corbett: That was in the Cleveland suit too, Your Honor. He is giving a general view here of the various drop bottom buckets in the field.

(Narrative continued.) This patent to George E. Wagner, No. 1,225,537, also shows the type of scoop similar to the skimmer scoop, used for the same purpose; has a drop bottom door latch X, latch mechanism Y, earth-entering teeth attached to the drop bottom; and also shows a pair of side-cutting teeth Z. There is no clear specification where they are mounted, but probably on the sides.

The next patent 1,316,058, to Pugh.

Mr. Corbett: That was in the Cleveland suit, Your Honor, patented September 16, 1919, M. E. Pugh.

(Narrative continued.) This shows a drop bottom bucket having a drop bottom 24 mounted on sides 19, revolving around a pivot pin 29, carrying earth-cutting teeth 25, and retained in load-carrying position by a latch 42, which is tripped when desired to dump by a latch lever 48. This dumping may also be automatically carried out through the attachment of a chain 45 to the bucket-carrying bail. This scoop is primarily designed for use on a drag line machine as shown.

The next bucket of this drop bottom type is shown in patent 1,339,606, issued May 11, 1920 to M. E. Pugh.

Mr. Corbett: That was in the Cleveland suit, Your Honor,

(Narrative continued.) This also is designed for use on a drag line machine and has the element of drop bottom 39, rotating around the pivot pin 58, carrying earth-cutting teeth 42.

Mr. Corbett: Just indicate that part with your pointer.

(Narrative continued.) 42. A peculiarity of this bucket is that the ordinary latch mechanism which has appeared in all the others at the rear end, is replaced by a toggle joint, indicated by the figure 60; and the load pressing down on the bucket produces a lengthwise stress against that toggle joint which holds the load up until the pull of the line breaks the toggle and the load goes on through. They have two forms, one with the toggle collapsing down, and one up. When the toggle collapses down, the bucket is tripped; so that the ordinary latch mechanism does not appear at the rear end on this bucket.

The next drop bottom bucket is shown in the patent to Morrison et al., 1,249,805.

Mr. Corbett: That patent was in the Cleveland suit, Your Honor, but we believe there was some misinformation relating to that matter.

The Court: Misinformation in what respect?

Mr. Corbett: Mr. Downie gave some testimony about that patent device, and I believe Mr. Ferris may clear that up. Some of the statements he made, we believe, are not correct.

(Narrative continued.) This bucket was designed for use with a large revolving shovel, the type used for coal stripping. It sometimes dumps 65 feet above the floor on which it digs. Ordinarily those shovels are used for casting over, that is to say, for swinging around and landing a load on a spoil bank. But there were some cases where it became desirable to load cars standing on the floor of the pit on which the shovel was working.

Q. Do you know something about the actual device of this patent? A. Yes. We built some of them while I was there.

Q. Who, the Bucyrus Company? A. Yes, sir; so that this bucket was designed so that when the scoop of the outward digging shovel, when we did not want to dump it on the high spoil bank, we could dump it on a pit, operating exactly as a drop bottom scoop of all the others we have mentioned.

Q. Do you recall any of the statements made by Mr. Downie in connection with that patent?

Mr. Richey: I think the record is the best evidence of that.

Mr. Corbett: We can compare what Mr. Ferris says with the record.

Mr. Richey: Objection to the question.

The Court: Just ask him questions along the same lines and see what his answers are. It is a matter of comparison.

Q. Would you say that the structure of this device of the Morrison patent is totally prohibitive of its use for a ditcher bucket? A. I would say not.

Q. Will you give your reasons why not? A. My reason is, I could put it on the bottom of the ditcher stick and ditch with it.

Q. Something was said by Mr. Downie about the lead of the bucket—

The Court: What you are interested in is the unloading, is it not?

Mr. Corbett: I just want to bring out the question whether or not—Mr. Downie's position was that this device could not be used in a back instroke ditcher.

The Court: For unloading or digging?

Mr. Corbett: For both,—either one.

The Court: All right.

Witness: I say it will work on instroke ditching.

Q. Mr. Downie indicates that one of the reasons it would not work on the instroke ditcher was that there was an excessive lead in the bucket—

Mr. Richey: I object to that question, having counsel interpret the testimony. He can ask him a question and ask for his opinion as to what this thing would do and what it would not do. You are interpreting his testimony.

Mr. Corbett: Do you object to it?

Mr. Richey: Yes, I am objecting to it.

Mr. Corbett: I thought you objected a minute ago because I did not call his attention to the testimony.

Mr. Richey: No, I did not. I told you you could ask this man things about the operation of this and compare it with the testimony.

The Court: And along the same lines as the Downie testimony.

Mr. Corbett: Yes. That is what I am trying to do.

Mr. Richey: But you are telling him Downie testified to so and so.

Q. In this Cleveland suit, Mr. Downie said "The lead of the bucket is 25 degrees; the lead of the ditcher bucket is 3 degrees, approximately. That may be varied to increase to 5 degrees, or diminish to 1. I have on this copy of the Morrison patent, drawn certain lines, which indicate that feature and others to which I shall refer, explaining what I mean by the excessive lead in the bucket. It is alleged that this bucket could be placed on a ditcher stick and used for cutting a trench. That is in error. For a number of reasons, the bucket will not even operate on an outward arc machine, as intended and described by the patentee." Will you state what your knowledge and experience is regarding those statements?

Mr. Richey: Objection to that, for the reason I already named, and partly because you only read part of what he said. I think it is objectionable to read it that way. You can go over the same identical ground for comparison.

Q. Will you explain just what was done with this Morrison bucket, whether or not it was ever built by the Bucyrus Company, and whether or not it was ever tested? A. Referring to this patent?

Q. Yes. A. Yes, we built one three-quarter yard size, mounted on a small revolving shovel with, I think, our 18-B, and tested it sufficiently to prove that it worked perfectly. That particular shovel bucket was not sold, and we later on built a bucket of somewhat modified design in the same general lines, but considerably modified, but operating the same way. That bucket was sold to two places where they wanted to dump in a pit; and for anything I know it is operating yet.

Q. Have you any illustrations of these other buckets that were built after the first Morrison bucket? A. Yes, sir, I have a drawing.

Mr. Richey: That is not according to the answer, is it?

Mr. Corbett: This is all prior art.

Mr. Richey: That may be. I am just asking you the question.

Mr. Corbett: No. The matter was just called to our attention a few days ago, as a matter of fact. It is not in the answer.

Mr. Richey: Then you simply rely upon it as part of the art?

Mr. Corbett: Yes.

Mr. Richey: That is what I wanted to know.

Witness: I have here a blueprint of tracing 35576, of the Bucyrus Company, print bearing date of January 31, 1918.

Mr. Richey: Had you not better qualify him on that before you get his testimony on it, to prove whether or not it is hearsay.

Q. Have you any actual knowledge as to the building of this bucket and the sale of it? A. I have actual knowledge as to the building of it. I know that it went out of the plant. As to whether it was sold or given away, I cannot tell you, of my own knowledge.

Q. What is the drawing number on the blueprint you have just produced?

Mr. Richey: Did you see the bucket?

Witness: Yes.

The Court: The important thing is, do you know whether it was put into operation, and whether it was working?

A. I practically know it was put in operation. I did not go out and see it operate. In the ordinary sense, I know it.

Q. It was sent out by your company to other companies, and never came back? A. It went out in the ordinary course of shipment. I know it operated, but I don't know whether I am competent to say so.

Q. If it had not operated successfully, you would have heard about it? A. I should say so.

Mr. Richey: Oh, objection.

The Court: That is a big order for him, to say that. It might have been burned up, or smashed up on the railroad.

Q. I hand you a photostat copy of a paper and ask you to state, if you know, what that is?

Mr. Richey: Have you the original?

Mr. Corbett: No, sir, we have not.

Mr. Richey: I think it is immaterial. I am going to object to it as secondary. Ordinarily, I would not, except that it is immaterial to anything in this case.

Witness: This is a—

The Court: Just a minute, what was it, Mr. Corbett?

Mr. Corbett: I think this witness has enough actual knowledge of this matter. I have not the original records here. They are not accessible to us.

Mr. Richey: Is it about this bucket?

Mr. Corbett: It is about this bucket, a blueprint, and we have a photograph showing the bucket made.

The Court: What do you want to show about the blueprint?

Mr. Corbett: I just want to show that the bucket was sold—actually sold for use. If it was made, it is enough, whether it was used or not.

Q. Have you any photographs of the bucket as actually made?

Witness: I have not finished the examination of this. I have a photograph of drawing 35576 which shows this actual bucket as constructed, assembled in the shop before shipment.

Q. Was that bucket shown in that photograph tested at the Bucyrus Company to your knowledge? A. No, sir, it was too big,—a six-yard bucket.

Q. You know it was made and sent out and left the plant? A. Yes, I know it was made. I know it was brought to the shipping point, and I suppose it was sent out. I did not see it around there afterwards.

Mr. Corbett: Your Honor, if this matter becomes important—it just came to our attention a short while ago,—and unless we can prove the original records of this sale, it becomes important and we may want to do that by deposition.

The Court: That is all right. You may do it by deposition. Then you want to withdraw this at this time?

Mr. Corbett: I will withdraw it temporarily.

Q. Do you know of any other drop bottom scoops that were in use—any actual knowledge of them—prior to the date of the first Downie patent? A. Other than the—

Q. Other than the— A. There is another of this same construction,—seven and one-half yards.

Q. Yes, but another besides the Bucyrus bucket or Morrison bucket? A. I have looked at others, but I have not memoranda of them right here.

Q. Did you ever see the Clutter drop bottom skimmer scoop in use? A. Oh, yes, I have seen it in use casually; I have seen lots of them in use.

Q. Have you read the deposition offered in evidence in this suit, and which relates to the developments made by one Bernard R. Clutter, at Joplin, Missouri, in the winter of 1919 and 1920? A. I have.

Q. Please briefly summarize and illustrate to the court what Bernard Clutter did in the making of the development described in his deposition, and in the depositions of the corroborating witnesses?

Mr. Corbett: Your Honor, we want to offer these blueprints and photographs in evidence.

Mr. Richey: Want the blueprint?

Mr. Corbett: Yes, 70 on the blueprint, and 71 and 72 on the photograph.

Witness: I offer his chart No. 20, showing three sketches: The upper one called sketch A, the middle sketch B and the lower one sketch C. Sketch A is practically a reproduction of the figure of the Clutter patent 1,317,431, showing the boom 15, ditcher stick 1, the pivoted scoop 2, all operated by hoisting line 21 and hauling line 23.

The Court: Where is 21?

Witness: The hoisting line is 21.

The Court: That is not a drop bottom bucket.

Mr. Corbett: That is the Leroy Clutter patent.

Witness: The Leroy Clutter. The whole scoop drops, the scoop being dropped by pulling on the trip line 9, which operates a latch 8, permitting the pin 5 at the upper end of these pivoted braces to slide down the slot and let the scoop drop down and spill its load. The sketch 2, or intermediate sketch, shows the skimmer scoop of the earlier Leroy Clutter patent, 1,107,899, in which the scoop rolled on a set of rollers in and out onto the boom, and the boom being set higher or lower or, generally speaking, about the level during the digging; and then being lifted to dump the load from the bottom by this scoop out into the wagon. The scoop would then be in a tilted position. As I understand it, these scoops from the skimmer machines then on hand at the Joplin site were immediately available adjacent to this machine which was then digging, without giving entire satisfaction, having trouble regarding the dumping of the bucket and breaking the wagon.

Q. This machine then digging—you mean of the Leroy Clutter type? A. The Leroy Clutter patent, yes; and what Bernard Clutter did was simply to take the—

Mr. Richey: Well, I don't think he has a right to review that testimony.

Mr. Corbett: He is just illustrating the chart.

The Court: He is trying to tell me what that testimony means if it is true.

Mr. Corbett: That is all. It is to make this simple for Your Honor.

Witness: The lower sketch C, shows the machine after the Bernard Clutter development. The difference between the lower and upper sketch is that in place of this bucket being allowed to rotate on those pivots to dump, it was placed on the same pivots and held in rigid position by the same braces, and a block of wood in here, so that it could not dump; and then the load is dumped by tripping the door, just exactly as it is done on the skimmer scoop. That is my understanding of the Bernard Clutter development as described in the deposition.

Q. Please compare the various part of this structure produced by Bernard Clutter at Joplin in the winter of 1919 and 1920 and this Bernard Clutter as a whole with the device which is shown and described in Downie patent 1,511,114?

The Court: That is the second Downie patent?

Mr. Corbett: That is the first Downie patent, drop bottom patent.

The Court: Oh, yes.

Witness: I have a comparative chart numbered 64, in which the upper sketch is reproduced from—

The Court: From the Downie patent.

Witness: From figure 2 of the Downie patent; and the lower sketch represents the Bernard Clutter development; and on this I have marked some letters and numerals used on another Bernard Clutter development to have them harmonize. The hoist line 18 of the Downie patent corresponds to the hoist line F of the Bernard Clutter; a link 16, to the links 8; pivot 15, to pivot J; ditcher stick 11, to ditcher stick I of the Bernard Clutter,—capital I. Pivoted to boom at a point 6 between the ends of the ditcher stick, corresponding to pivot point K; scoop 23 of the Downie patent corresponding to scoop 40 of the Bernard Clutter device; a drop bottom door 25, corresponding to a drop bottom door 41; on a pivot pin 28, corresponding to a pivot pin capital B; tripped to dump a load by latch mechanism 29 and 33 of the Downie patent, corresponding to latch mechanism 53 of

the Clutter development; and the scoop being hauled in by hauling line 43 of the patent, corresponding to hauling line capital D of the Bernard Clutter device.

Q. In order to illustrate the subject matter of the claims, of this first Downie patent, will you take claim 6 of the Downie patent and point out to the court, or read the claim, element for element, and point out the structure of the Downie device which corresponds to each element?

Mr. Richey: Of course we renew our objection to an expert reading the claims.

Mr. Corbett: I am just trying to show Your Honor what the Downie device is, and what claim 6 applies to; and then to show the comparison. It is merely a labor saving device for the court.

The Court: I understand what you are trying to do.

Witness: The first element in the Downie patent is a boom mounted for up and down movements, marked 2.

Q. What color? A. On chart 19.

The Court: What color, he said.

Witness: Boom marked red on chart 19, the numeral 2; and then a scoop-carrying member pivoted to the outer end of the boom at a point between the ends of said scoop-carrying member, the scoop-carrying member marked 11, shown in orange, and pivoted at point 6 to the outer end of the boom. The next element: A hoisting line engaging a pulley connected pivotally to the upper end of the scoop carrying member—that is that pivot 15—for controlling the up and down movement of the scoop-carrying member and boom.

Mr. Corbett: Will you read it on the chart there?

The Court: It is right there in front of you.

Witness: Yes: And in conjunction with the weight of the boom, for causing outward movements of the lower end of the scoop-carrying member—the downward pull on the boom acting on this pivot 6, tends to swing the scoop out. The next element is scoop 23, in blue, a scoop attached to the lower end of said scoop-carrying member, the attachment of the scoop to the scoop-carrying member being rigid and fixed throughout the entire cycle of operation, the inward end of said scoop being open. The scoop is held by the braces 20 from any movement relative to the scoop-carrying member, and the inner end is open. Element E, hauling line for drawing the scoop inwardly marked 43, and showing here on the

chart. Element F, a pivoted bottom for the scoop pivoted to the sides of the latter, the axis of movement of the bottom being arranged transversely of the scoop, and located adjacent to the open end thereof—all corresponding to the pivoted bottom 25 on the chart. And G, and an automatically engaging latch means for normally maintaining the bottom in closed position,—the latch means being indicated in the larger figure 2 by 29 and 33.

Q. Please take claim 6 of this first Downie patent and show the court whether or not it reads literally upon the structure of the Bernard Clutter development? Have you any illustrative chart showing the claim itself in conjunction with it? Do you have any chart, Mr. Richey?

Mr. Richey: No, that is the only one I have.

Witness: Reading the same claim: In an excavating machine.

Q. What is the number of that claim? A. Claim 6 of the Downie patent.

Q. Applied to what?

The Court: The Bernard Clutter development.

Witness: Applied to the Bernard Clutter device. Element A: In an excavating machine, the combination of a boom mounted for up and down movement,—shown in red; a scoop-carrying member pivoted to the outer end of the boom at a point between the ends of said scoop-carrying member,—shown in orange; a hoisting line engaging a pulley connected pivotally to the upper end of the scoop-carrying member for controlling the up and down movement of the scoop-carrying member and boom, and in conjunction with the weight of the boom—the hoist line pulls a pivotal connection D and scoop; attached to the lower end of said scoop-carrying member, the attachment of the scoop to the scoop-carrying member being rigid and fixed throughout the entire cycle of operation —the rigid braces—the inward end of said scoop being opened. E, a hauling line for drawing the scoop; F, a pivoted bottom for the scoop, pivoted to the sides of the latter, the axis of movement of the bottom being arranged transversely to the scoop and located adjacent to the opened end thereof—shown in dots there; and G, and an automatically engaging latch means for normally maintaining the bottom in closed position—as indicated here.

Q. Will you take claim 9 of this Downie patent, and see whether or not that claim will read literally upon the Bernard Clutter development? A. Claim 9, Downie patent 1,511,114, illustrated by chart 27. Element A—

The Court: Is this the Bernard Clutter device again?

Mr. Corbett: It is the Bernard Clutter device; it is a different claim, claim 9.

The Court: Yes, I know it is claim 9; but it is not labeled like the other one.

Witness: In an excavating machine, the combination with a tiltable boom—shown in red; and B, a ditcher stick pivoted at one end to the outer end of the boom—shown in orange; C, a scoop rigidly secured to the lower end of the ditcher stick at a point in rear of the scoop—shown in blue; D, and a drop bottom—shown in the dotted construction; E, pivoted to the sides of the scoop at a point below and in advance of the rigid connection F between the scoop and the stick—this and this are the rigid connection between the scoop and the stick.

Q. Have you any charts showing any other claims of this first Downie patent, illustrating the question as to whether or not they read on the Bernard Clutter development? A. Yes, sir.

Q. Please show the court.

The Court: How many of these claims do you claim read on the Bernard Clutter patent?

Mr. Corbett: Five of them read directly on the claims.

The Court: Which one does not?

Mr. Corbett: I think claims 7 and 8 have some minor variation, and I think one other may be.

Witness: Claim 12.

Mr. Corbett: We are sued on 6 to 14. 7 and 8 and 14, we are going to discuss and point out the differences, Your Honor.

Mr. Richey: Here it is, 7, 8, 11, 14, Mr. Corbett said did not read on this Joplin anticipation.

Mr. Corbett: I said they did not read literally on that.

Mr. Richey: You reserve the right to contend they are not patentably different from them?

Mr. Corbett: Oh, yes.

Witness: Claim 12, illustrated by chart 29. Claim 12 of the Downie patent 1,511,114. Element A: In an

excavating machine, a swinging boom mounted for up and down movement,—shown in red; B, a ditcher stick pivoted to the outer end of the boom and extended above and below the same,—shown in orange; C, a scoop rigidly mounted on the lower end of the ditcher stick—shown in blue; D, and provided with a drop bottom—shown in the dotted construction as before; E, means for pivoting said bottom to the scoop in advance of the rigid connection between the scoop and the stick,—shown by the arrow of the pivot point of the bottom; F, latching means for the drop bottom—shown at the right hand end of the scoop; G, a dumping line for operating the latching means —shown adjacent to the latching means; H, a hoisting line for the upper end of the stick for controlling the stick and the boom—indicated by this arrow; and I, a hauling line connected to the scoop—indicated here.

Q. How about claim No. 10, or any other claim you have there that reads on it? A. Claim 10, illustrated by chart 28. A: In an excavating machine, the combination with a tiltable boom,—is it necessary to repeat all this?

The Court: No, I would not think so.

Mr. Richey: It is all a farce, so far as I am concerned.

Mr. Corbett: Are you willing to admit—

Mr. Richey: No, I am not willing to admit at all; I contend none of the claims read on the construction.

Mr. Corbett: We would like to show Your Honor.

Mr. Richey: It is a matter of argument.

The Court: This does not help me materially. Take the charts, put them together, and ask him a general question. I don't think Mr. Richey will object to it on that particular ground.

Q. Which of the claims 6 to 14, in your opinion, read literally upon the Bernard Clutter development device in addition to those you have already named?

Mr. Richey: Objection to that because this man is not qualified to read claims, in the first place.

Mr. Corbett: He is giving his opinion.

The Court: He will give his opinion that these claims read as he has outlined on this chart.

Mr. Corbett: That is common practice.

Mr. Richey: If Your Honor wants to take it.

The Court: It will save time. You can cross examine him. These charts are helpful.

Mr. Richey: I think they are misleading, on the contrary, Your Honor.

The Court: That is for you to show.

Mr. Richey: All right, sir.

The Court: It seems so to me.

Mr. Richey: It is a matter of argument.

The Court: Yes, a matter of argument afterwards.

Q. You have named claims 6, 9 and 12. Which are the other claims?

The Court: I am just trying to save time. If you read all those, we will have to take a couple more nights here.

Mr. Corbett: It just places the matter before Your Honor.

The Court: I know. I can take those charts and in a few minutes I can see just what you are claiming about that.

Mr. Corbett: All right, Your Honor. That suits us very well.

Witness: I read claims 6, 9, 10, 12, 13 and 14 directly on the Bernard Clutter development.

The Court: You did not claim 14 in your opening statements.

Mr. Corbett: There was the possible question there about the side rake teeth.

Witness: That is true; I have a question mark as to the side rake teeth. I will have to withdraw 14; I would like to correct my testimony.

The Court: What charts have you there which illustrate the answer? Tell us which ones they are. Put them all together.

Mr. Corbett: I will just offer them in evidence.

Mr. Richey: Objection to them. They are immaterial.

Mr. Corbett: The illustrated charts 64-A, 27, 28, 29 and 30 referred to by the witness are offered in evidence, and requested that they be collectively designated Defendant's Exhibit No. 73.

Mr. Richey: I object to them as immaterial and I should like to be heard on it.

The Court: All right.

Mr. Richey: The matter of claim reading, in the first place, is the function of the court, and not of expert witnesses. This witness has a right to explain what these machines are and how he thinks they would operate. This matter of claim reading, the way it is done here, is misleading, because there is no interpretation given to the language of the claims. There is no ques-

tion of equivalency discussed. This witness does not know the rules of equivalency. He does not know how the language would be interpreted in the law. When we were up here on the motion for a preliminary injunction, my brother came up here with a lot of charts like these, with lines all through them, these very claims, and other claims in these patents directed to the prior art; and it was before the Court of Appeals and, according to this kind of scheme, the claims read right on the very prior art the Circuit Court of Appeals considered, and did not even consider worth mentioning in its opinion. That just shows how this case is being cluttered up with a lot of stuff that has nothing to do with the case and is not at all helpful, but is actually misleading to the court.

The Court: I think, Mr. Richey, the court has got to start some place, and these charts will help the court.

Mr. Richey: I say they are misleading.

Mr. Corbett: It is common practice. We are not asking this witness to pass upon any question of equivalency.

Mr. Richey: I have never been in a patent case loaded down with this kind of stuff in all the years I have been practicing.

Mr. Corbett: Maybe you should have been, Mr. Richey; maybe you would not have won the case in Cleveland.

Mr. Williams: The whole effect of Mr. Richey's objection is to the weight and not the competency.

The Court: It is along that line.

Mr. Richey: When we have a chance to argue this case, I do not want the Court of Appeals to think that I am going to load this case down with my witnesses on this kind of stuff. I want to know if I am going to have a chance to answer this in argument.

The Court: Certainly. This is just a step, to introduce the subject matter of the argument; and that is the way I see it.

Mr. Richey: Counsel can produce them and talk about them in his argument.

The Court: But if you objected to them, he would not have them in his record in the Circuit Court of Appeals.

Mr. Richey: If he will agree to use them down there, that may be different.

Mr. Corbett: You may not decide to appeal this case. There is no use in making that agreement now.

Mr. Richey: I hate to see a case loaded down.

Mr. Corbett: We can show you ample ground for it in the past practice, if necessary.

The Court: They are here. I am trying to save time. I think they will help to a certain extent. If they are misleading, you may explain that to the court as part of your argument. I do not see how you can be hurt any if they brought in one hundred of them.

Q. Will you refer to claim 7 of this Downie patent and discuss briefly what differences, if any, you find in the language of that claim; what differences you find between that language and the structure of the Leroy Clutter device?

Mr. Richey: May it be understood that I am objecting to all of this?

The Court: Yes. I suppose if none of these devices read upon these patents at all, that would be an argument in your favor as far as it would go, would it not?

Mr. Richey: I do not know that that amounts to a great deal. It is not a matter of reading words or drawings; it is a matter of substance.

Mr. Corbett: That is the first place to start.

The Court: It is. I am just asking you, as one lawyer to another, whether that would not be in your favor if they did not read at all.

Mr. Richey: I think so, yes.

The Court: Yes, just as it is a step in the opposite direction to show that they do. What it amounts to is a matter of argument, for your consideration. That is all I see about it at this time until I hear the arguments on the other side.

Witness: I am using chart 20 to illustrate this. Claim 7 of the Downie patent 1,511,114; the first element: In an excavating machine, the combination with a boom—15 of the Leroy Clutter patent 1,317,431—having spaced portions at the outer end; said spaced portions carrying a transversely arranged pivot pin—which is also shown—of a ditcher stick—marked 1 and shown in orange—of structural steel comprising two spaced channel beams. I have no way of telling from the drawings of the Leroy Clutter patent accurately what the construction of the ditcher stick is.

Mr. Richey: How can he read a claim on there when he says he does not know what it is.

Mr. Corbett: He is talking about the Leroy Clutter structure, not the Bernard Clutter.

Mr. Richey: It is the same stick, as I remember the testimony.

The Court: He said he cannot tell whether it is.

Mr. Corbett: You admit the stick of the Leroy Clutter device is the same as the—

Mr. Richey: No, I do not. I do not know what the proofs are. Go ahead. He said he did not know what it was.

Witness: So far as I see, the functioning of the stick is not dependent upon those provisions in the claim.

Q. What provisions in the claim? A. That the ditcher stick shall be of structural steel comprised of two spaced channel beams.

Q. I hand you herewith Defendant's Exhibits Nos. 68 and 69, which purport to be tracings of a ditcher stick marked by the Osgood Dredging Company in the years 1884 and 1885, and ask you to briefly describe that structure to the court, with particular reference as to whether or not these spacings show spaced channel beams in a scoop-supporting stick? Please take up each exhibit separately. A. Drawing No. 484, Defendant's Exhibit No. 69, shows a dipper stick supporting a dipper, and specifies that the length of the channel composing the dipper stick is 23 feet—

Q. I just want you to point out to the court whether or not that structure shows spaced channel beams. A. It does show spaced channel beams.

Q. Refer to the next exhibit and point out to the court any cross section on either of those exhibits which shows that spaced channel beam structure. A. The spaced channel beams on the exhibit named are shown in sections A-B, and C-D. On the other drawing, Defendant's Exhibit No. 68, the legend specifies or shows that the stick is made of channels 8 inches wide, one-quarter inch thick, and two inch flange.

The Court: Your answer is yes?

Witness: The answer is yes. I don't see a cross section on this drawing. The specification is perfectly clear.

Q. What would you say is the normal purpose of producing a structure of spaced channel beams instead of the I-beam or solid rod,—speaking as an engineer? A. Usually, to make a stronger structure.

Q. Something is said in this claim 7,—the latter part of the claim specified,—said pivot pin transversely con-

necting the space portions of the boom to the opposite side of the said bracket, whereby a long pivot and bar therefor is provided between the boom and the ditcher stick. In your experience as the head of the designing department of a shovel company, and as an engineer generally, is it, or is it not, common practice to provide a bar of adequate length to resist all stresses to which it may be subjected? A. It is.

Q. Will you refer to claim 14 of this Downie patent, No. 1,511,114, and briefly discuss the difference, if any, between the Bernard Clutter structure and the structure defined by this claim?

The Court: You claim everything reads upon it except the side rake teeth; is that it?

Mr. Corbett: In claim 14, yes, sir.

Q. Are side rake teeth shown in the Leroy Clutter development, and if so, what structure, and where were they mounted? A. That element does not correspond with rake teeth fastened to the side of the scoop and overhanging the pivots on the bottom so as to protect said pivots.

Q. Did the Bernard Clutter development have side rake teeth? A. Yes, but not fastened to the side of the scoop.

Q. Did they overhang the pivot to protect the pivot? A. Yes. The language is that they projected.

Q. What is that? A. They projected to protect the pivots,—projected on the plane of the pivots.

Q. How about the language of claim 11? Anything, or any feature there that is not specifically shown in the Bernard Clutter development? A. No. Claim 11 specifies, said stick being composed of two spaced apart beams.

Q. I see; well, you needn't discuss that.

Mr. Corbett: Our position, so that it will be clear before Your Honor, without any argument on the matter, is that these changes in the claims 7 and 8 and 11 and 14 are merely mechanical skill.

Q. I would like to ask you if you have any prior art patents or publications showing the subject matter of claims 7 and 8, as you understand them? A. I offer chart 31, illustrating patent to E. J. Keith, No. 1,315,512, and to S. Hoar, No. 1,322,570. I think I will want to substitute another—just a minute, please, and see if I have another chart here. Pardon me,—I would rather use chart 63 first.

Q. Just discuss the structures of this chart generally with relation to claims 7 and 8, and state whether or not, in your opinion, these claims read literally on either one of those structures? A. This is the patent to S. Hoar, 1,322,570, which shows a ditcher stick composed of space channels, and having bearing brackets 17 secured to these channel beams, not literally secured to flanges 18, but immediately adjacent to them and having the same effect. It shows a scoop rigidly secured to the lower end of the ditcher stick and means connected with the channel beams to maintain them in spaced apart relation, and said brackets not secured to the inner flanges but adjacent to them, which are equivalent in function to this claim 7—the equivalent in function.

Mr. Richey: Both the Keith and Hoar patents were in the Cleveland case. That is right, isn't it?

Mr. Corbett: I think they were.

A. (Continuing.) In this same chart the upper figure shows a photostat copy from the catalogue of the American Railway Ditcher Company—is this an exhibit?

Mr. Mahoney: Not yet.

A. (Continuing.) American Railway Ditcher Company, showing a ditcher stick having a—

The Court: It is the same thing as up there (referring to chart No. 63).

Witness: Yes.

The Court: Well, then use that up there.

A. (Continuing)—showing a ditcher stick rigidly secured,—or scoop rigidly secured to the lower end of the ditcher stick, composed of spaced apart channels with brackets attached to the upper end, embracing a pivot across the lower part of the boom. I might comment that the whole structure seems to be much wider and more rigid than the structure indicated in the drawings of the patent.

Q. What has been the practice throughout your experience in the event that a scoop designed for light digging, in loose soil, was to be used for heavier digging, such as in soils containing rocks or the like? A. Put teeth on it, if it is heavy enough to carry them, and if it is not, make a heavier scoop.

Mr. Corbett: Your Honor, I said a moment ago that I thought this fourth patent that was mentioned was in the Cleveland suit, No. 1,322,570. Our record indicates

that it was not in the Cleveland suit, as we have checked up on it.

Mr. Richey: 1,322,570?

Mr. Corbett: Yes.

Mr. Richey: Why, here it is in the record, Court of Appeals, page 1022.

Mr. Mahoney: It is not set up in the answer.

Mr. Richey: Well, that might be.

Mr. Mahoney: I don't see it in the list of our exhibits here.

Mr. Richey: Well, see if it is in the index. Yes, it is in the index.

Q. (By Mr. Corbett.) Have you read and do you understand the third Downie patent, No. 1,709,466, issued April 16, 1929? A. I have read it, and I think I understand it.

Q. Please refer to claims 1, 2, 8, 10, 11, 12, 13, 15 and 19, upon which the suit is here brought, and state in a general way what those claims relate to.

The Court: Is that the assembly patent?

Mr. Corbett: Yes, the assembly patent. That is the third Downie patent, No. 1,709,466.

A. These claims relate, in a general way, to the detachable mounting of a scoop rigidly upon the ditcher stick.

Q. Have you read, and are you familiar with, the patents set up in defendant's answer against this third Downie patent? A. I have read some of them, and am familiar with them.

Q. Please take such of these patents as you have read and are familiar with, and compare some of them with the structure of this Downie patent, with particular relation to the subject matter of these claims 1, 2, 8, 10, 11, 12, 13, 15 and 19.

Mr. Corbett: Your Honor, the witness is having difficulty to locate a certain group of patents, and if you don't mind, I will withdraw that question, and take him into some other matters so as to keep going here.

The Court: All right.

Q. Does defendant's structure, that is, the Osgood structure, embody spaced brackets connecting the inner flanges of the channel beams to make up the ditcher stick? A. It does not.

Q. Have you any drawings of the Osgood structure?

(Witness produces chart.)

Q. Is this a drawing of the Osgood structure? A. It is, but doesn't go up far enough to answer the question.

Q. Or is it a drawing of the General Excavator structure? A. That is a drawing of the General Excavator structure. I am sorry.

Q. Please take the drawing of the Osgood structure, if you have one. A. This is a drawing showing connections of the ditcher stick to the Osgood scoop, not extending high enough to answer the question which you have just asked about the space bearing.

Q. Have you a photograph showing the structure which will enable you to point out to the Court whether or not the Osgood Company uses spaced brackets secured to the inner end of channel beams, in the inner flange of the channel beams? A. I have a photograph which shows a full width bearing upon the stick in this photograph.

Q. Does it show space brackets? A. It has no space brackets; the bearing goes entirely across.

Mr. Corbett: Just show the Court that photograph, if you will, please.

Witness: And I have personally inspected other ditcher sticks which have the exact construction, and I know the standard bearings extend from one side to the other, on all of them.

Q. What is the purpose of the spaced arms 5 at the outer ends of the boom shown in the first Downie patent, No. 1,511,114? A. I would presume they are there to lengthen the boom and to support the ditcher stick.

Q. Are those spaced arms removable? A. They are.

Q. Do you find any such removable arms in the Osgood structure? A. I do not.

Q. What is the purpose of removing these spaced arms from the boom in the Keystone structure, if you know? A. It makes a convertible structure, in which the skimmer scoop can be run on the same boom.

Q. Then the spaced arms are removed in converting from the ditcher to the skimmer scoop; is that right? A. That is my understanding.

Q. So as to obviate or avoid interference of the rollers which roll in the channels of the boom; is that right? A. That is my understanding of it, yes.

Q. In the Osgood structure, would you say that the scoop is rigidly secured to the lower end of the ditcher stick at a point in the rear of the open end of the scoop?

A. No, it is secured at the point flush with or at the open end of the scoop.

Q. Does defendant's structure embody a swinging boom mounted for up and down movement? A. In the art, a swinging boom is generally understood to refer to a one-handed machine in which the boom swings to and fro to an angle of 180 degrees, or approximately.

Q. Does it have rake teeth fastened to the side teeth, which rake teeth overhang the pivots on the bottom? A. No.

(Narrative continued.) I will now take this Downie patent and show the structure of the teeth thereof with respect to this overhanging feature, and compare it with the structure of defendant's side rake teeth. To make this definition of the patent clear, I refer to chart 103, which shows the tooth as specified in the patent, mounted on the side of the structure, of the dipper,—side of the scoop—and extending over and projecting beyond the pivot pin. The structure of the Osgood bucket includes or comprises a flat chisel-bladed tooth which is both above and below the pivot pin, with the pivot pin passing through it. As a designing engineer, the explanation I would give for the selection by the Keystone Driller Company, or by Downie, of that particular type of tooth is that it is easier to make and cheaper.

Comparing the structure of the Osgood ditcher stick with the structure of the ditcher stick shown in the first Downie patent, the Osgood ditcher stick is composed essentially of three channels.

The Court: This chart is Osgood that you have here now?

A. (Continuing.) This chart, No. 103, is a prospective, to get a view of the Osgood stick construction, with its connection to the scoop. The stick is composed of one large channel on the side away from the mouth of the scoop, having riveted to it two smaller channels, and the opposite flanges of these channels being closed by a covered plate, making a solid structure roughly four-sided, square structure, especially adapted to have the maximum torsional strength and the maximum bending strength.

Q. Please compare that with the Downie structure. A. 1,511,114, first Downie?

Q. Yes, 1,511,114. A. Comparing this with the stick structure shown particularly in Figs. 3 and 4 of this

patent, connecting bars 13, or batten plates, as they are usually called, only very inadequately connecting the two main channels of this structure to develop their strength as a unit. The other members, the additional members used in the Osgood structure, make it very much stronger.

Q. Without comparing the relative merits of the structures, just point out briefly the differences, if you have not already done so. A. Well, the differences are simply the open structure of the two channels connected by plates, as against the closed box structure.

Q. Now much has been said in this case by Mr. Downie and others about the question of rooting. It is supposed to cover the dropping of the bottom and digging first with the downwardly projecting side rake teeth, and then closing the bottom and digging with the scoop as a whole. Will you point out to the Court whether or not in your opinion, the structure shown in the Downie patent No. 1,511,114 is capable of rooting, giving your reasons in answering this question? That is, capable of rooting as explained by Mr. Downie. A. As I understand rooting, as explained by Mr. Downie, and as illustrated in the Keystone test out at the Davis coal yard, rooting implies side teeth, which are able to project downward into the cut beyond the level or plane of the teeth attached to the open door. The teeth shown in the patent 1,511,114 will not do this, but come several inches short of reaching; which I have illustrated by chart No. 103, showing the scoop dragging along the surface with the door open, and with the overhanging side rake teeth reproduced approximately to scale on the chart. As I understand it, this would not give rooting effect.

(Narrative continued.) The point I make is that the teeth are so short that the point on which the side rake tooth swings in an arc, is always within the bottom of the bucket as long as that bottom of the bucket is open and lying on the ground.

I have read this Downie patent in an endeavor to find anything in the patent specification or claims indicating that the Downie device was intended for, or capable of, rooting, and I find nothing in the patent specification or claims on this subject. It is my opinion that this patented structure shows nothing either in the drawings or the specification that indicates it would be capable of the rooting action as described by Mr. Downie. I cannot go back to all descriptions of Mr. Downie and check against them, however.

Q. I refer you again to the third Downie patent No. 1,709,466, and particularly refer you to the foot members 27, which are attached to the base of the ditcher stick in this Downie structure, and ask you to state whether or not you have any knowledge as to the novelty of use of angular brackets of this type at the time the application which resulted in this third Downie patent was filed. A. This ditcher stick, or any ditcher stick, as I see it, is simply a combination of structural shapes put together for a certain purpose, and that purpose in general is a column. The elements used in constructing this column are just the same as the elements used in the constructing of columns of a building or any other place where structural stuff is put together to accomplish an end.

Q. Have you any illustrations of the use of similar foot members, either in building construction, or in shovel construction? A. I have prepared a chart.

Mr. Mahoney: We offer in evidence the Osgood photograph carrying the number 3346 as Defendant's Exhibit No. 74. We also offer in evidence the title page of the American Railroad Ditcher Company catalogue, and the copyright on the page following that, showing copyright notice by the American Hoist & Derrick Company, of St. Paul, and also page 37 of that catalogue as Defendant's Exhibit 75.

The Court: They are all received, if there is no objection.

A. (Continuing.) To illustrate this matter, I have prepared a chart simply by photostating a couple of pages of the Carnegie Steel Company's handbook, which is in the hands of probably three-fourths of all the structural mechanical draughtsmen of the country; everybody works from that.

Q. What is the copyright date of that book? A. This is a 1917 copy.

Q. And this chart No. 46, is it? A. Chart No. 46 and 45 illustrate just 2 pages from that telling how to make columns.

Q. What pages? A. Chart 46 refers to page 297, and chart 45 refers to page 246.

Q. In your practice with the Bucyrus Company, it was customary to connect the ditcher sticks or the scoop sticks to the scoop by means of castings and cross-pins; is that not correct? A. Yes, sir.

Q. What is your idea, as an engineer, about the reason for the use of this structural steel connection as used in the Downie structure, instead of the casting? A. To save the cost of the casting.

Q. In other words, it is your opinion that the structural steel connections of this type are considerably cheaper than the castings; is that right? A. Very much cheaper.

Q. And in your opinion, did that probably instigate the use of structural steel members to effect this connection? A. That would be my reason for doing it.

Q. And in the ordinary work of the designing or draughting room of a company of this type making shovels, is it the custom for the draughtsmen or designers to be on the lookout for patents covering various arrangements of braces or angle clips before proceeding to construct a column to connect it to the scoop? A. We would certainly never have to watch out for anything mentioned in this patent as a construction for the ditcher stick.

Q. Just what do you mean by that? A. I mean that we would not expect to run into patented construction in merely latticing together, or spacing or joining in any way structural shapes to make a column adapted to the purposes to which it was to be put.

Q. In other words, it is customary in designing structural work of connecting the structural steel work of a column to another member, or of a stick to its scoop, to utilize any desired form of arrangement of clips or braces to make that connection; is that right? A. Surely.

Q. And when you do make that connection, you place your braces in such a way as to resist with best effect torsional strains or twisting or other strains to which the device being made is likely to be subjected; is that right? A. That is right.

Q. This third Downie patent makes a point of the fact that certain bolts are used for getting the ditcher over in tension. Please briefly state what you understand to be meant when it is specified that the bolts are in tension or when it is specified that the bolts are in shear. A. Well, literally when a bolt is in tension, it only receives a force in that direction (indicating). That pencil is in tension like that (indicating). It is the stress in the direction of its length. When it is in shear it is subject to stress tending to go in two crosswise.

Q. And in the designing in the room of a shovel plant, or a similar plant, what is the practice among en-

gineers in the excavating industry, we will say, regarding the use of bolts in tension and bolts in shear? How do they select those? A. So far as my experience and opinion go, we avoid putting fastenings in tension when we want them to be reliable, and put them in shear.

Q. You think that bolts in tension are not so reliable as bolts in shear? A. I think so, yes, generally speaking.

Q. And in the structures of the Bucyrus Company, in most of your shovels the pins which were used for connecting the casting to the scoop were in shear; is that right? A. Always; practically always.

Q. And did that, as a matter of fact, enable you to get a stronger connection than if your pins had been in tension? A. I could design a tension connection just as strong, but I wouldn't.

Q. Would you be free to use either one? Would you be free to use your bolts in tension or bolts in shear, in designing? A. I don't understand what you mean by "free".

Q. Would you expect to find some patent on the manner of arrangement of the bolts in tension? A. No.

Q. No, what? A. I wouldn't have thought of it. I would expect to be free to put them in tension on there.

Q. In other words, an engineer is free to place his bolts in tension or in shear, whichever way he gets the best results; is that the fact? A. Absolutely.

Q. You spoke of the Carnegie Steel book. I would like to call your attention to Defendant's Exhibits 68 and 69, and ask you to point out to the Court any structural features which you find in those tracings which correspond to the members 27 of Downie patent No. 1,709,466. These members 27 are shown best on Fig. 6, Sheet 2 of the drawings of this patent. A. Referring to Defendant's Exhibit 68, I find that where the dipper stick joins to the dipper, it is secured to the back plate of the dipper by angle clips, bolted through the webs of the channels, and bolted through the back plate of the dipper in a manner similar to that shown in the connection of clip angles 27 on Fig. 6 of the patent. The same remarks apply to both Exhibits 68 and 69.

Q. Would you say that those clip angles are substantially identical or not with the clip angles 27 on Fig. 6 of this Downie patent No. 1,709,466? A. I would say they are substantially identical in structure but the bolts are not subject to the same kind of stress, if that is of any importance.

(Recess to seven-thirty P.M., March 11, 1931.)

Mr. Corbett: Your Honor, the witness has not gotten over here yet, and Mr. Mahoney has several depositions that we put in meanwhile.

The Court: All right.

Mr. Mahoney: Your Honor, I wish to state that we wish to offer in evidence as merely part of the prior art, and will give it an exhibit number, all of the prior art patents that were discussed by any of our witnesses and that are not in our answer or referred to in our depositions. We are collecting them together, Mr. Richey, and will give you a copy of them.

The Court: All right. We might consider them all in, or you can offer them when you get the list made up.

Mr. Mahoney: Well, we just want to make sure that we have them in the record.

The Court: If anybody fails to offer an exhibit, you can do it any time before you close your case,—or even after that.

Mr. Richey: Is this Exhibit 62?

Mr. Mahoney: We have this Exhibit 62, all of our prior art patents listed in our answer, and you know we cut down our list somewhat, although the patents themselves are still in the book. I wish to make that an exhibit, however, of the prior art patents.

Now, we have got some depositions here, and we wish to offer in evidence the depositions of Ben S. Thompson, Clarence Yardley and W. R. Lawrence, and Defendants' Exhibits 56 and 57 that were offered in evidence at the time those depositions were taken. Defendants' Exhibit 58 is also offered in evidence. Defendants' Exhibits 59 and 59A are also offered in evidence. Defendants' Exhibit 60 is offered in evidence. I think that is all right now.

DEPOSITIONS FOR THE DEFENDANTS

Taken at Columbus, Ohio.

NOTICE OF TAKING TESTIMONY.

MR. PHILIP E. SIGGERS,
918 F Street, N. W.,
Washington, D. C.

MESSRS. RICHEY & WATTS,
1090 Union Trust Building,
Cleveland, Ohio.
Attorneys for Plaintiff:

Please take notice that defendant herein will take the testimony of the following persons:

Ben S. Thompson, 1919 Cambridge Blvd., Columbus, Ohio
Clarence Yardley, Kileville, Ohio
W. R. Lawrence, 248 E. Como Avenue, Columbus, Ohio

all of whom reside more than one hundred (100) miles from the place of trial herein, for use on behalf of the defendant at the final hearing of this cause, before Karl R. Meredith, notary public in and for the County of Franklin, Ohio, who is not of counsel nor interested in this cause, at the office of Corbett & Mahoney, 820 Huntington Bank Building, Columbus, Ohio, beginning on the 30th day of December, 1930, at ten o'clock a.m., and thereafter from day to day as the taking of the depositions may be adjourned; and such testimony will be so taken in accordance with the provisions of Sections 863, 864 and 865 of the Revised Statutes of the United States and the Federal Equity Rules.

You are invited to attend and cross-examine.

EDWIN P. CORBETT,
Attorney for Defendant.

Dated December 26, 1930.

Service of a copy of the foregoing notice acknowledged, this 27th day of December, 1930.

RICHEY & WATTS,
Attorneys for Plaintiff.

PRINTER'S NOTE:

A like Notice was issued on behalf of the General Excavator Company and was signed by Mr. Edward L. Reed.

The following depositions were taken on behalf of both defendants, pursuant to the above notice, at the office of Corbett & Mahoney, 820 Huntington Bank Building, Columbus, Ohio, before Karl R. Meredith, notary public in and for the County of Franklin, Ohio, commencing at ten o'clock a.m., on the 30th day of December, 1930. Counsel for all parties being present.

W. R. LAWRENCE, a witness called by defendants, being first duly sworn, testified as follows:

DIRECT EXAMINATION by Mr. Mahoney.

My name is W. R. Lawrence. I reside at 248 E. Como Ave., Columbus, Ohio. I am 42 years of age. I am a photographer, and have been engaged in that business for 24 years. I am employed by the Service Photographic Company. The photographs which have been handed me and which have been marked by the notary for the purpose of identification as Defendants' Exhibits 56 and 57 are photographs of a steam shovel, taken at Star Road and Flanagan Pike by me on December 27th, 1930. I developed the negatives from which these photographs were made. These negatives are now in my possession. The photographs were developed from the original negatives. These photographs marked for identification as Defendants' Exhibits 56 and 57 correctly and accurately represent the machine which they purport to show. Both photographs represent the same machine. Referring to photograph 56, this is a photograph of the scoop shown in Exhibit 57 and taken from the rear of the bucket.

Mr. Mahoney: Photograph, marked for identification as Defendants' Exhibit 56, which has been identified by the witness is hereby offered in evidence and the notary is requested to mark the same as "Defendants' Exhibit No. 56, photograph of dipper bucket of a Thew shovel located at Star Road and Flanagan Pike, Columbus, Ohio" and photograph marked for identification as Defendants' Exhibit 57 is hereby offered in evidence and the notary is requested to mark the same as "Defendants' Exhibit No. 57, photograph of Thew Steam Shovel located at Star Road and Flanagan Pike, Columbus, Ohio."

Mr. Edgerton: The exhibits 56 and 57 are objected to as immaterial and irrelevant.

Mr. Edgerton: No cross examination.

Deposition closed.

BEN S. THOMPSON, a witness, called by the defendants, being first duly sworn, testified as follows:

DIRECT EXAMINATION by Mr. Mahoney.

My name is Ben S. Thompson. I reside at 1919 Cambridge Blvd., Upper Arlington, Ohio. I am engaged in the real estate business. I am 52 years of age. I have been connected with the Northwest Boulevard Company since its organization, I cannot remember the date, but I think 1915 would be correct.. I am president of the company. This company is engaged in subdivision of lots. In laying out subdivisions the Northwest Boulevard Company had occasion to use a steam shovel, and this steam shovel was owned by the company. The photograph, Defendants' Exhibit 57, is a picture of Thew shovel, which the Northwest Boulevard Company purchased. That shovel was purchased by the Northwest Boulevard Company in the year 1916. That shovel is still in existence and is now located on North Starr Avenue, in the village of Upper Arlington, close to what they call Starr Road and Flanagan Pike. Our company still owns the shovel shown in photograph Defendants' Exhibit 57. We purchased this shovel from the Thew Shovel Company of Lorain, Ohio. The paper which was just handed me is a contract entered into with the Thew Shovel Company for the purchase of the steam shovel on October 11th, 1916. The contract was signed by me as president of the Northwest Boulevard Company. Subsequently, we received the shovel on that contract. I cannot give the exact date this shovel was received, but I think it was about the first of the year, 1917, but I am not sure, it may have been received before the first of the year, 1917.

The paper which was now handed me is a bill of lading for type O Thew Steam Shovel, complete, No. 1356, which is the number of the machine. This bill of lading is dated in the year 1916. The signature on the contract is my signature as president of the Northwest Boulevard Company.

Mr. Mahoney: The Order contract, dated October 11, 1916, between The Thew Automatic Shovel Company and the Northwest Boulevard Company, which has just been identified by the witness, and the Lorain, Ashland and Southern Railway Company bill of lading, dated 1916, consigning one Type O Shovel to the Northwest Blvd. Company are hereby offered in evidence as one exhibit and the notary is requested to mark the same "Defendants' Exhibit 58, contract dated October 11, 1916 between Thew Automatic Shovel Company, Lorain, Ohio, and the Northwest Boulevard Company, Columbus, Ohio, and memorandum bill of lading covering the shovel referred to in said contract."

Mr. Edgerton: The exhibit is objected to as immaterial, irrelevant, and insufficiently proven.

(Narrative continued.) The Type O Steam Shovel referred to in Defendants' Exhibit 58 is the same as the shovel shown in Defendants' Exhibit 57. My company actually used the steam shovel shown in Defendants' Exhibit 57 in laying out the subdivisions or work connected therewith. This shovel was used for ten years to my knowledge. I recall that Clarence Yardley and Charles Fowler operated this shovel for us. Our company complied with the terms of this contract, Defendants' Exhibit 58, and became vested with the full title to the shovel, about the year 1916 or thereabout.

No cross examination.

Deposition closed.

CLARENCE YARDLEY, a witness called by defendants, being first duly sworn, testified as follows:

DIRECT EXAMINATION by Mr. Mahoney.

My name is Clarence Yardley. I reside at Kileville, Ohio. I am 32 years of age. I am a shovel operator. I have operated Thew, Erie, and Koehring shovels. I operated a Thew shovel for the Northwest Boulevard Company of 52 West Gay Street, Columbus, Ohio. I began my employment with the Northwest Boulevard Company, in 1916, firing the shovel. The Northwest Boulevard Company is engaged in real estate development, subdivision work, and laying out lots in subdivisions. Defendants' Exhibit 57 is a photograph of the

Northwest Boulevard shovel. This is a Thew shovel, and the one on which I worked as a fireman when I first became employed by the Northwest Boulevard Company. This shovel is now located in Upper Arlington, in Northwest Boulevard and Wilshire Road. The road that runs across Starr Road where this shovel is located is now known as Chambers Road, and used to be known as Flanagan Pike. So that the shovel is now located near what was formerly called Starr Road and Flanagan Pike. The photograph, Defendants' Exhibit 57, correctly and exactly represents the shovel as it now stands. Defendants' Exhibit 56 is the bucket and part of the stick on the Northwest Boulevard shovel, shown in Defendants' Exhibit 57. The shop order number on the shovel shown in Defendants' Exhibit 57 is 1356. I operated the shovel shown in Defendants' Exhibit 57 approximately five years. During that time I was employed by the Northwest Boulevard Company as operator. While I was the operator the shovel was used in Northwest Boulevard subdivision and Upper Arlington subdivision, which are located northwest of Columbus, Ohio. Referring to Defendants' Exhibits 56 and 57, these photographs show the Thew shovel in the same condition, so far as the type of ditcher stick, boom, dipper bucket are concerned, as they were at the time I began work on the shovel in 1916, and as they exist today on the shovel located at Starr Road and Flanagan Pike, except with wear and tear on the parts. The Thew shovel shown in Defendants' Exhibit 57 is capable of being operated and run by one man. In the event that the shovel was operated by one man, the operator would be required to do his own firing. The bucket shown in photographs Defendants' Exhibits 56 and 57 could be removed from the ditcher stick. To go about removing the bucket shown in Defendants' Exhibits 56 and 57, I have marked two bolts "B" on Defendants' Exhibit 56 to be removed, then the "pin" to be removed.

Q. The removal of—or unscrewing the nuts on the bolts which you have marked "B" and then removing the bolts and then removing the pin that goes through the rectangular flange member and through the base casting on the ditcher stick would allow the bucket to drop off from the ditcher stick, is that correct? A. Yes, sir.

Q. The bolts which you have marked "B" run parallel to the ditcher stick arm, is that correct? A. Yes, sir.

Q. The bolts "B" go through the base casting at the end of the ditcher stick and also through the back casting on the dipper bucket, is that correct? A. Yes, sir.

Q. Can the bucket shown in Defendants' Exhibit 56 be removed from the ditcher stick in any other way besides that you have just described? A. Yes, sir.

Q. How can that be done? A. By removing these bolts I have marked "C" and dropping bucket, including arm, which extends up into the sleeve, which I have marked "D".

Q. What is the purpose of this plate or part which I have marked "E" on Defendants' Exhibit 56? A. That is to hold the dipper in place on stick "D".

Q. With the arrangement of parts shown in Defendants' Exhibit 56, is it possible to attach dipper buckets of varying widths to the ditcher stick "D"?

Mr. Edgerton: The question is objected to as calling for a conclusion.

A. Yes, sir.

Q. How could this be done?

Mr. Edgerton: This question is also objected to as soliciting an opinion, the witness has not been qualified beyond a fact witness and this line of examination is therefore objected to.

Mr. Mahoney: This witness has testified that he is an experienced shovel operator, having experience with various makes and types of shovels, and has also testified that he operated this shovel for five years, and should therefore be qualified to answer the question.

A. By removing the bucket as answered before in answer to Q34 and Q35, and replacing the other style bucket with same size recess.

Q. In other words, the ditcher stick "D" with the plate, which has been marked "F" attached thereto, could be removably fastened to any size dipper bucket which had the same size recess on the back plate of the dipper?

Mr. Edgerton: This question is objected to as leading.

A. Yes, sir.

(Narrative continued.) The Northwest Boulevard Company owned another shovel of the Thew type like that shown in Defendants' Exhibits 56 and 57, and it had practically the same style ditcher stick and parts for

fastening the ditcher stick to the bucket. The bucket on this other steam shovel had a rectangular recess on the back casting of the dipper bucket. The other steam shovel had a foot member or casting like that marked "F" on Defendants' Exhibit 56 and had the same manner of attaching the casting "F" to the dipper bucket. The buckets on these two shovels were different sizes. The other shovel which I have just been testifying about was purchased after the shovel shown in Defendants' Exhibits 56 and 57. The shovel shown in Exhibit 57 had a three-quarter cubic yard bucket and the other shovel had a five-eighths cubic yard bucket.

Q. Yet the buckets on the shovels, though of different sizes, could have been interchanged on either shovel by means of the pin and the bolts "B" being inserted through the foot casting "F" and rectangular recess in the back dipper casting, in the manner which you have previously described. Is that correct?

Mr. Edgerton: The question is objected to as leading and as calling for an opinion.

A. I could not say positive, never had occasion to change. If the recess is the same they could have been changed.

Q. I now hand you a tracing, which was made from the machine shown in Defendants' Exhibits 56 and 57, and ask you to state whether or not this tracing shows the correct assembly of parts by which the ditcher stick D is attached to the dipper? Referring in particular to "Fig. 1" and "Fig. 2". A. Yes, sir.

Q. The other figures on this tracing show the parts in a disassembled relation, is that correct? A. Yes, sir.

Mr. Mahoney: The tracing which has just been identified by the witness as a correct showing of the relation of parts of the dipper and ditcher stick shown in Defendants' Exhibits 56 and 57, is hereby offered in evidence and the notary is requested to mark the same "Defendants' Exhibit 59, tracing of dipper bucket and ditcher stick shown in Defendants' Exhibits 56 and 57."

Mr. Edgerton: The exhibit 59 is objected to as incompetent, and immaterial. No explanation has been given by the defendants as to their failure to produce the working drawings from the machine manufacturer, nor has the exhibit been shown to have been made from the machine itself.

Q. I now hand you what purports to be a circular No. 26, issued by the Thew Automatic Shovel Company, of Lorain, Ohio, and ask you to state whether or not this circular 26 shows any shovels with dipper arms and buckets like that shown in Defendants' Exhibits 56 and 57? A. Yes, sir.

Q. Will you indicate on this circular by means of the letter "G" one such showing? A. Witness marks the circular with letter "G".

Q. Please read the legend on this circular 26, which has been marked by the letter "H".

Mr. Edgerton: The circular speaks for itself. There is no occasion for the witness to read from the circular.

A. "The dipper is interchangeable at the point indicated."

Q. Where does the lead line from this legend you have just read lead to on the illustration on this circular.

Mr. Edgerton: Same objection.

A. It leads to the dipper stick of the shovel marked "G" and bucket.

Mr. Mahoney: The Thew Automatic Shovel Company of Lorain, Ohio, circular No. 26, is hereby offered in evidence and the notary is requested to mark the same "Defendants' Exhibit 60, Thew Automatic Shovel Company's Circular No. 26."

Mr. Edgerton: The Exhibit is objected to as immaterial, incompetent and insufficiently proven.

Q. When did you do your last work as operator on the machine shown in Defendants' Exhibits 56 and 57 for the Northwest Boulevard Company? A. Approximately in 1925.

Q. How is the hinge plate shown in Fig. 3 fastened to the ditcher stick, referring to Defendants' Exhibit 59? A. It is pinned to the arm as shown in Figure 2 and Figure 1.

Cross Examination by Mr. Edgerton.

I first entered the employ of the Northwest Boulevard Company in 1916, about October. My first service with them was as fireman on the machine illustrated in Defendants' Exhibit 57. I served in that capacity about three years. I served as operator of the machine about five or six years. I could not say exactly when the Northwest Boulevard Company purchased the second Thew excavator, possibly two years later than that one. I

am not sure but I think the model number of the second machine is 1192, it was an older shovel, a re-built shovel. I would say that 1192 was the shop number. The second machine was older in sequence and manufacture at the factory than the machine shown in Defendants' Exhibit 57. I operated the second machine. As to the difference between it and Defendants' machine No. 57, I would say there was no general difference in design, some parts reenforced and just ordinary changes in the line of improving, in Exhibit 57 over the old one. The second machine to which I have referred is now in the junk yard. As to whether any part of the scoop and stick is intact, I don't know. They have had it three years, I expect. I mean that the junk people had it three years. I have not tried to look it up lately.

Q. Referring to Exhibit 56, I call your attention to the clearance about the "pin", which appears to be occasioned by wear, and ask you to explain, if you can, how this wear occurred. A. As that bucket is on the ground and you are crowding it the weight is down on the "pin", as soon as you release that pressure the weight is on the other side, it is bound to wear on the loose pin.

Cross examination closed.

Deposition closed.

(Certificate of notary omitted.)

Walter Ferris, a witness, recalled by defendants, testified as follows:

Direct Examination.

Q. Please compare some of the patents set up in defendant's answer against the third Downie patent No. 1,709,466, and compare these patents with the structure of this third Downie patent with particular relation to the subject matter of claims 1, 2, 8, 10, 11, 12, 13, 15 and 19.

The Court: This is the third Downie patent, which was not involved in the Cleveland litigation?

Mr. Corbett: Not involved in the Cleveland litigation. That is the assembly patent.

A. Referring to the Downie patent 1,511,114, shown on chart 19—

Mr. Corbett: I think it might be better to talk from that patent.

The Court: Is this the patent you want, Mr. Corbett, the one he has there now?

Q. What are you going to do with that patent. A. That is to show the change, the development of this patent.

Q. You are going to compare that patent with the patent in suit, 1,709,466? A. Yes.

The Court: I see. All right.

Mr. Corbett: You better work from the patent drawings, unless you have a clear disclosure there, so you can show the Court better that way. Speak loud and mention the reference numbers or numerals, or letters.

A. Comparing Fig. 2 of Downie patent 1,511,114 with Fig. 2 of 1,709,466, it appears that the attachment of the dipper, rigid attachment of the scoop to the end of the stick, and the rigidity of that attachment, was obtained by exactly similar members in every respect, except that in the patent 1,709,466 both members are made detachable in order to permit the scoop to be changed.

The Court: Interchange the parts of the scoop?

Witness: Yes. All the stresses taken during the digging operation on these back braces and on the stick are duplicates of the stresses in this patent, and the design has been changed in order to permit disassembling.

Q. In other words, bolts are used instead of rivets; is that the idea? A. Pardon me.

Q. Bolts are used instead of rivets? A. Yes. Well, there are additional separations made, and those separations are closed by bolts which can be unscrewed and taken apart. Now, I will illustrate that more in detail by chart 101, which shows the Osgood dipper, Osgood scoop and its attachment to the handle.

Mr. Corbett: You cannot compare one reference—this is a question of validity, Mr. Ferris. Can you compare one patent with another?

Witness: Well, I can use that to illustrate the differences more easily. Well, the thing that I want to say is, that the separation of this ditcher stick from the arched or bail structure that goes to the top of the scoop is merely made with the well-known method of connecting the ditcher stick with clip angles and bolting the clip angles to the arched structure of the scoop by fastenings

of a well-known nature, and the braces 20 are also separated and put into two pieces and similarly connected.

Q. Now, take the rest of the patents. Take them up briefly and discuss them. Take the King patent for instance, and discuss the structure or connection there, comparing it with the connection structure of the Downie patent No. 1,709,466, with particular reference to the question of tension bolts. A. King, No. 589,565, patented September 7, 1897. In this case the ditcher stick 9 is terminated by an enlargement made by plates W and W, rigidly secured to the end of the ditcher stick structure, and each of those plates terminates in a foot which engage respectively the upper and lower bands or arches around the upper and lower sides, or top and bottom, of the dipper as it appears on this chart, being attached thereto entirely by bolts which are parallel to the axis of the dipper stick. In addition, the feet of these plates are curved and fitted into cross sockets, and the connecting bolts which hold the dipper,—dipper stick to the dipper,—pass through clearance holes so that the bolts do not touch either side of the hole, and maintained in this position—clearance holes, I mean, of the dipper stick—maintained in that position by the curvature, so that it cannot touch either side of the hole, and is entirely in tension.

Q. Now, take the next patent. A. With reference to the dipper stick construction, there are four patents in evidence,—Howard, Coffey, Boehm and Robinson,—of which I have no copies.

Q. What is the number of your Howard patent? A. 674,417. Howard, 674,417, shows a ditcher stick composed of spaced parallel channels with filling members in between to space them apart.

Q. Which Figure is that, Mr. Ferris? A. That is in Fig. 4. Boehm, No. 999,953, also shows a ditcher stick made of spaced parallel channels, referring to Figure 4, also to Figure 5.

Mr. Richey: Are you citing this against the third Downie patent?

The Court: This is the assembly patent.

Mr. Corbett: Yes.

A. (Continuing.) 745,329, B. H. Coffey, Figs. 3 and 4, show a ditcher stick made up of spaced parallel channels.

Q. While you are on that patent, Figs. 3 and 4 show these spaced parallel channels facing each other; is that correct? A. That is correct.

Q. And in that case, they are separated by plates? A. By wooden filler.

Q. By wooden filler, and there also have connected thereto, to make the rectangular—to make the stick, the rectangular cross section to the plates? A. Yes, sir. That makes a complete box section, commonly called armored; a completely armored wooden dipper stick.

Robinson, 1,047,991. Referring to Fig. 6, particularly, this shows a ditcher stick made up of two parallel channels 18, with inward turning flanges and filled in with alternating thick wooden members and thin steel members, making what is called a laminated dipper handle, which is the subject of this patent.

Those four patents are illustrative of the general effect, that it has been the universal practice to make the dipper stick of channels or beams or pieces of wood or plates in pretty nearly all possible combinations, the object being to get a structure which would offer the greatest possible resistance to bending and particularly to torsion and not break. Any way to do it is the best way.

Q. Have you finished your patents now, Mr. Ferris? A. I have. Those are the only patents which I have on the list.

Q. Suppose you briefly consider the structure of the Thew Shovel Company, which is in evidence here by way of depositions.

Mr. Mahoney: There are three depositions, Yardley, Thompson and Lawrence, which I introduced here lately. Here are the photographs. I just introduced those exhibits showing the shovel, and there is the structure.

A. The blue-print of that ditcher—Is there a blueprint of that Downie in evidence?

The Court: You want the pictures?

Witness: If I might have a picture of the Thew, to make sure of it.

This casting,—this steel casting generally square in section, represents the top of the dipper in the sense in which we are generally locating dippers in this discussion, and shows several interesting features. The first is the detachability. I think this perhaps is plainer (referring to chart). This casting has deep ribs or girders

running across the plate where it is fit, to make it stiff or strong, against the upward or downward pushing of the dipper stick. The dipper stick is provided with a rectangular end plate which fits down into a pocket in the design, which is partly connected by tension bolts and partly by a long shear pin. This illustrates the interchangeable connection, because different widths of dipper scoops can be put on the same handle, and it particularly illustrates the tension bolts or requirement with girders across the back, to stiffen up the back and take the thrust off the stick, and the shear and tension connections.

Q. Would you say that there is any difficulty in the structure of the type described in this third Downie patent in providing bolts that are in tension when those bolts are used like the bolts 28 on Fig. 6 of this third Downie patent? A. I would say it is difficult to provide bolts that are used in tension exclusively.

Q. Would you say there is any difficulty in the way —to provide that exclusively, you say? Just what would happen, and what would be the stresses that would exist, briefly, in a shovel of this kind against bolts such as the bolts 28? A. The bolts would be bound to take shear. It is pretty nearly impossible to put those bolts through there and keep them in tension exclusively. The dipper stick takes severe torsional strain, due to obstructions alternately on the two sides of the trench, wherever there is both encountered in resistance, and this torsional stress having to be resisted by some stress which is equivalent to shearing those bolts.

Q. Will you refer again to the Osgood Dredge Company dipper stick which is shown in Defendant's Exhibits 68 and 69, and consider the bolts which extend through the clip angles at the base of the dipper stick,—extend to the base of the clip angles into the shovel—and state whether or not the screwing of those bolts in place would exert a tension stress on the bolts? A. Oh, certainly. When they are screwed tight they have a heavy tension in them.

The Court: The tighter they would be, the more tension would there be?

Witness: Yes, sir.

The Court: And if they got loose, they would be liable to take some shear; is that correct?

Witness: Yes, they would take some shear.

Q. The fact is that they would probably be subject to both shear and tension?

The Court: Well, as I understand his testimony, that is theoretical only, that they are always in tension. It depends on what the shovel encounters in its everyday work. Is that what he means by his testimony? He said, encounter obstacles on one side or the other.

Mr. Corbett: He means the greater twisting stresses that would render these bolts subject to shearing stresses.

The Court: Yes.

Witness: If those bolts were the sole connection between the dipper handle and the shovel, they would be subject to shear, also. There would be no way of escaping it.

Q. Do you have in mind any other prior art structures, besides those you have discussed, which throw light on the question of novelty in this third Downie patent? A. Well, the thing that I had next in mind was a little further discussion of the similarity of those members with ordinary building practices.

Mr. Corbett: I think that has been made clear to you, Your Honor.

The Court: No, he has not covered that.

Mr. Corbett: Well, suppose you explain that.

The Court: Outside of this digging and excavating machine industry.

Witness: Well, that is outside of that, which is the general practice of making such structures. This ditcher stick, of either of these constructions, in its construction and in its requirement for strength at the bottom where it has to take a heavy thrust to bridge the gap between this side of the dipper and that side of the dipper is almost the duplicate of the ordinary columns in a building. It is designed for largely the same reasons, and to produce almost a similar structure in point of effect.

Q. I hand you herewith a group of photographs, which I will designate Defendant's Exhibits 76, 77, 78 and 79 and ask you to state, if you know, what those photographs show? A. These photographs show a Morrison dipper of ¾ yard capacity attached to a revolving shovel, at the Evansville plant of the Bucyrus Company, 14 B shovel.

Q. State what you know about this shovel structure shown in these photographs from your actual knowledge. A. From my actual knowledge, I merely

know that the drawings were made under my supervision, the bucket built, and from these photographs and general reports, the reports which would have to come back to me and did come back to me, I know it was tested at Evansville. I didn't see the test. I know it was found to function satisfactorily.

Mr. Richey: I object to that.

Q. Was it the practice when you were chief engineer of the Bucyrus Company, which I understand you were at this time— A. Yes, sir.

Q. Was it the practice for you then to discuss the results of these tests and receive reports in connection with them? A. Undoubtedly; absolutely.

Mr. Richey: Are the reports still in existence?

Q. Were the reports always written, or were they oral? A. They were usually a written report. I don't know whether it is in existence or not.

Q. Did you also discuss it orally? A. Undoubtedly, yes. It was the usual practice.

Q. Was the report on this test favorable or unfavorable?

Mr. Richey: I object to that. He said they were written reports, and he don't know whether they are in evidence or not.

The Court: You haven't laid the foundation for secondary evidence, have you?

Mr. Corbett: Well, Your Honor, he was in a position where he was in the business of designing these shovels, and therefore certainly was in a position to know that a report would be made to him if it didn't work.

Mr. Richey: Anyhow, if it was satisfactory, it might have been merely a matter of the opinion of some one.

Mr. Corbett: When the chief engineer of this Bucyrus Company designing the shovel doesn't get any backfire from it, it is pretty good evidence that it is successful.

The Court: Well, I don't think that is competent evidence. It doesn't give Mr. Richey any chance to cross-examine him on this subject at all. He has got somebody's opinion. If it is all right, it is 100% all right.

Mr. Corbett: Your Honor, this is a matter that came to us just before we came down here on this trial.

The Court: Well, if you want to support it later by depositions, all right.

Mr. Richey: Now about that, Your Honor, I wonder if we have the right to take depositions after trial. Doesn't the statute say that the depositions must be taken between issue and the trial?

Mr. Corbett: On new matter the Court can certainly reopen the case.

The Court: I would think so, although I have never had that phase of it presented to me.

Mr. Richey: If it was a matter of delay, and the Court thought so, I don't think they could.

The Court: This has all developed on the presentation of the case, as I understand it. It is something new.

Mr. Corbett: When the time comes, we will show the excuse. I don't think we need to press this motion at the present time.

Mr. Richey: Well, all right.

The Court: At some time you will want to meet all this, Mr. Richey.

Mr. Richey: Well, I will meet it if I can meet it. If he wants to ask Mr. Ferris' opinion as to how this thing would operate, I have no objection to that.

The Court: You couldn't have any objection to that.

Mr. Richey: No. But here he says it operated satisfactorily. I assume it did operate satisfactorily, inasmuch as it scooped up the dirt and dumped it. But the report that he speaks about is not before us, and we don't know what it shows.

The Court: Is that satisfactory to you, Mr. Corbett, to ask this witness his opinion on whether it would operate satisfactorily?

Mr. Corbett: Well, we will ask his opinion, but we wouldn't want to be shut off about taking depositions.

Q. You might state, Mr. Ferris, whether this device shown in these photographs will operate satisfactorily? A. It will, and did.

The Court: Well, strike out the latter part of it.

Witness: All right.

Q. I hand you the patent to Olson, No. 826,051 of July 17, 1906, and ask you to briefly explain the structure of that machine with respect to its manner of operation, whether it dug towards the machine or away from the machine? A. This patent shows a machine in which a scoop was mounted—

Mr. Corbett: Your Honor, that was in the Cleveland suit.

The Court: This one was?

Mr. Corbett: Yes, sir.

The Court: Of course, it wasn't with reference to this patent here, was it?

Mr. Corbett: This has a bearing on the drop bottom. We are just trying to clean up these questions. It has a bearing on the drop bottom. I will state the bearing as soon as the witness has explained.

A. (Continuing.) This patent shows a machine with a scoop 25 mounted,—rigidly mounted on the lower end of the ditcher stick 24.

Q. Just show the Court, will you, please? A. I beg your pardon. (Presents to Court.)—but operated by two lines, one of which 28 pulls the scoop towards the machine, and the other of which marked 30 pulls the scoop away from the machine. By referring to Fig. 2 of the patent, it will be seen that the scoop can be reversed, so that by using the line 30 as a hauling or digging line, the machine operates as an out-stroke or outward arc shovel, while from Fig. 1 it is seen that by using the line 28 as a hauling or digging line it acts as an inward arc or back hoe stroke.

Q. Do you find anything in the specifications that bears on that question? If so, please read it. A. Which bears on the reversal of the dipper?

Q. Yes. That is, on the question of whether it could be used both ways, digging towards the machine or digging away from the machine? A. (Reads.) "If desired, said derrick may be mounted"—this is at page 2, line 77, —"If desired, said derrick may be mounted upon a scow or other suitable support, (not shown, but the construction of which would occur to one skilled in the art), and if desired said shovel 25 may, as shown in Fig. 2, be turned around so as to fill while moving away from the derrick support, in which latter case the closed end of the scoop or shovel will be provided with an outwardly opening latched door 25-a, having a latch releasing cord or wire 32 secured to latch 33 thereof and carried over any suitable purchase point or guide wheel 34 and thence to said car or other support, so that said door may be released and the load of earth dropped through the doorway to the dump."

Mr. Corbett: So as to clarify that point in your mind, this patent is offered to show, and is called to Your Honor's attention to show, that prior to the entrance, and long prior to the entrance, of Clutter in the

field, it had been realized that an outstroke shovel, an outstroke scoop and stick of that type, could be reversed on the same machine and used as an instroke shovel. Now, that has a bearing in connection with the devices of the type of the Morrison patent, because we are going to make the contention that there is no invention—in view of the fact that it had been previously suggested to use an outstroke shovel, reversing it and getting an instroke shovel,—that there was no invention in taking an outstroke shovel of the Morrison patent and reversing it, and in that connection the testimony which this witness is about to give relative to the Morrison patent bears upon, or produces a different light,—throws a different light on the Morrison patent than that which was thrown on the patent in the Cleveland suit. I think I make myself clear on that.

The Court: I think I can follow you. Now, the Morrison patent was in the Cleveland suit, however.

Mr. Corbett: Yes, it was, and it was discussed by Mr. Downie, but it was painted in such a light by Mr. Downie as we believe to be an erroneous light, and we are going to attempt to show it.

The Court: Now, this applies to the Clutter patent?

Mr. Corbett: This applies to the drop bottom first Downie patent.

The Court: All right.

Q. I hand you a copy of the patent to Morrison, No. 1,249,805, and ask you whether or not the device of this patent could be reversed and used as an instroke ditcher, or used as the scoop and stick of an instroke ditcher? A. It could.

Q. Would the direction or extent of the trip chain, the position of the hauling bail and the general shape of the bucket prohibit the use of this device on an instroke ditcher machine? A. They would not.

Q. Please explain to the Court the term "lead" which is sometimes used in connection with scoops or buckets? A. Referring to Fig. 1 of the Morrison patent, to make this matter clear, if I drew a line touching the point of that tooth—

Q. Please draw the line, and then we will offer that in evidence. A. That line representing the part of the earth which was not removed, and this being the cut taken by the dipper, the lead is the angle clearance,—it might be called clearance—between the bank after the dipper has passed and the front face or bottom face of the

dipper as it passes the bank,—is what I understand to be the intention of that citation.

Q. Please designate that line that you have just drawn with a letter and a lead line. A. I call that the angle A.

Q. Is the lead of the bucket shown in this Morrison patent a material detriment to the use of that bucket on an instroke ditcher,—that bucket and stick? A. The lead cannot be absolutely determined, but assuming the cut to be at right angles to the dipper stick, the lead, to get the best results should be somewhat reduced by changing the angle of the stick in the manner provided.

Q. If you were to adapt that to an instroke ditcher, what would you do? A. I would just put shorter line c-3 on connecting the top of the right hand upper corner of the scoop with the casting c-4 on top of the ditcher stick, on the front of the ditcher stick.

Q. When you were with the Bucyrus Company, was it known in the art to provide adjustable links of this kind, or to vary the position of these links? A. The members analogous to c-3 were practically always made adjustable.

Q. Have you any prior art patents at hand that show that? A. I will see if I can find one.

The Court: That would be setting that scoop at a certain angle; that is what that would amount to?

Witness: Yes, sir.

The Court: To a fellow that doesn't know much about patent law or machinery,—a question of providing them for any angle that they wanted to set the shovel,—wouldn't it?

Witness: Yes, sir.

Mr. Corbett: In order to shorten this and prevent the witness searching for patents, we will refer to patents in argument, or briefs, in this case that show that adjustability.

The Court: All right.

Q. Considering this Morrison patent still further, would you say that it would be possible with the bucket and the latch construction to close that bucket by momentum? A. Yes, it is. I will qualify that in this way: No, I won't qualify it. I will say even as shown in the patent it will close by momentum.

Q. Would you say that the top surface of the latch piece or latch tongue on the latch attached to this bucket is too flat and the lower surface of the latch is also too

flat to permit this automatic engagement, or automatic closing of the bucket? A. I would say that as the detail is shown on the drawing, it does not call for the normal amount of clearance under the latch which is always provided in every excavating dipper.

Q. Well, is it customary in the making of latches of this type to provide for a proper clearance or not,—or is it customary to adhere rigidly to the Patent Office drawings? A. It is customary to design with the necessary clearances which are necessary in every dipper.

Q. In that patent I call your attention to the hauling bail which is connected to the scoop and ask you whether or not there would be any interference between the teeth of that scoop and that hauling bail in the digging action of the scoop? A. There would not.

Q. That is, if it were applied to an instroke ditcher? A. The hauling bail b-6 is not shown in the attitude which it will assume.

The Court: In operation?

Witness: In operation as an instroke ditcher. It would come out somewhere near parallel to the bank surface, which has been indicated, or which I will indicate by the letter B, and the approximate direction of the hauling bail I might indicate by an arrow C, under ditching conditions, or back hoe conditions.

Q. At the time this patent was taken out, what was the custom with regard to the use of side rake teeth? A. Used them whenever they were required.

The Court: I suppose they always used something to protect those pivot points, didn't they?

Witness: No,—I would say to protect them in a sense. The prime requirements of protecting pivot points is to get the trench wider than the entire scoop, so the scoop won't be jammed in there. I wouldn't say the side rake teeth were always located right on the side of the pivot point.

Q. But they were commonly used? A. Always used to get the ditch wider in a narrow trench; to cut wider than the scoop.

Q. And it is true that a man putting side rake teeth on a scoop of this kind to apply it to instroke ditching work would provide those teeth of such structure that it wouldn't interfere with the hauling bail; isn't that right? A. Absolutely.

Q. Was the Morrison patent device and the device which you designed as shown in the photographs of the

Defendant's Exhibits 76 to 79, inclusive, a machine which had a three-power application in view of the use of the shipper shaft on that machine? A. No.

Mr. Richey: You didn't see it operated on your machine, did you?

Witness: I designed the machine.

Mr. Richey: But you didn't see it operate on the machine?

Witness: No. I know the machine only had two power line.

Mr. Corbett: Your Honor, we submit that a man who designs a machine knows whether it is two-power line or three-power line.

Mr. Richey: Suppose they found it didn't work, when it would with three.

Mr. Corbett: Well, you ask him, Mr. Richey.

Mr. Richey: No. He will tell you what somebody told him. We went over this before, that these fellows told him, and they said it was satisfactory, and so he would claim that they did this, that and the other.

The Court: You never saw this machine in actual operation yourself, did you?

Witness: I never saw this dipper in operation.

Mr. Corbett: I might ask how it was when he designed it.

Q. You saw the dipper on a machine? A. The dipper was used on a standard 225-B coal stripping shovel.

Q. And you have seen those in operation, have you? A. Dozens of them.

Q. And they had a three-power application or two? A. No, two-power.

Mr. Corbett: That is the answer.

Q. You designed the dipper for this shovel? A. Yes, sir.

Mr. Richey: Well, you are just going around in a circle. Suppose he did design it. That doesn't prove or show that he saw it.

Mr. Corbett: We will prove that by depositions. We offer in evidence the copy of the Morris patent, No. 1,249,805, of December 11, 1917, with the marks made by the witness thereon, marked as Defendant's Exhibit 80.

Q. Are you able to find in defendant's structure a scoop having an open top? A. No.

Q. Do you find in defendant's structure any scoop having a bail extending across its top? A. No.

The Court: Your structures are closed structures, and they wouldn't need a bail.

Mr. Corbett: Yes, sir. No, Your Honor, we don't need them.

Q. In defendant's structure, is defendant's ditcher stick,—the Osgood structure—is it made up of two parallel structural steel members which are spaced so that access may be had to space between them? A. No.

Mr. Richey: Now, that is asking the witness questions in the terms of the claims. That is highly improper.

Mr. Corbett: I don't think that is in the words of the claim.

Mr. Richey: Asking leading questions—does he find some terms in the patent or the claim of a different construction. Of course he says no. He is leading him right straight along, and testifying for him. Might as well argue it.

The Court: Well, these experts do usually argue the case, don't they?

Mr. Richey: Well, I don't think counsel should put the testimony in the mouth even of an expert.

Q. Is any provision made for obtaining access to the interior of defendant's ditcher stick structure adjacent to the bottom thereof,—speaking of the Osgood structure now? A. This is of the Osgood structure.

Q. Will you please point out to the Court that provision? A. I know what it is, but I am afraid I haven't a picture of it now. Yes, here it is. Here is the chart. Referring to the chart 101, this ditcher stick, as I have said before, is a closed structure comprising a wide channel on the back, two somewhat smaller channels extending parallel, closed by the cover plate in the front, and there are in the interior here two bolts which fasten it to the back plate of the scoop. In order to get at these bolts to apply them, they cut a couple holes in the webs of these channels to the end of this, to get in to the bolt.

Q. Does the defendant have a structure wherein all the bolts which need to be removed to detach the scoop from the stick are in tension?

Mr. Richey: I object to that as leading.

The Court: You can ask him that by asking him what bolts there are.

Q. Will you describe the structure of the Osgood Company connections between the ditcher stick and the scoop, and point out whether or not any of the bolts which must be removed to disconnect the stick are in shear? If so, indicate which bolts. A. A sectional sketch of chart 101 shows the structure of the ditcher stick and the supporting girders to which it is attached across the top dipper, cut in two. The angle clips, I believe 27 in the patent—I will check that. No, they are all marked here. The angle clips marked 4—

(Last question read, upon request of Mr. Corbett.)

A. There are six bolts marked 3 on chart 101, which extend parallel to the ditcher stick, and secure the ditcher stick to the scoop, and one bolt marked 6 which passes through the ditcher stick transversely and also through the vertical girder plates 1, and that bolt 6 is in shear. The other bolts 3 may have a combination of either shear or tension,—shear and tension.

Q. Regarding that cross bolt, which you have designated— A. 6.

Q. —6, that passes directly through the angle members 1, and also through the plates 7, which are laid upon the members 7-a, which complete the formation of the—

The Court: Well, you can see this here (referring to chart 101).

Witness: I will change that to 7-a.

Q. —ditcher stick, with the exception of the additional channel plate 7-b. That is correct, isn't it? A. Yes.

Q. In other words, these parts 7, 7-a and 7-b form a rigid box-like stick; is that correct? A. Yes.

Q. And the bolt 6 passes directly through and secures that stick, partially anyhow, to the angle members 1; is that right? A. It is, yes.

Q. Now, will you refer to Downie patent No. 1,709,466, and point out to the Court any difference, if it exists, between that bolt 6 and the bolt 33, in its operation? A. The bolt 33 of the Downie patent does not engage any part of the structure of the ditcher stick, but passes clear through between the parallel channels 12 without engaging them.

The Court: What Fig. did you have there,—which sheet?

Witness: 1709.

Q. This figure 6, isn't it? A. I was looking at Fig. 6, and Fig. 3 shows the bolt 33, and Fig. 6 shows where it passes through.

Mr. Corbett: Your Honor, I think that I have about finished with this witness. I think Mr. Reed has several questions. May I look over, and if there is anything else, while he is examining,—will that be satisfactory?

The Court: Yes. Go ahead, Mr. Reed.

By Mr. Reed.

Q. Mr. Ferris, you are familiar, are you not, with the ditcher stick and the scoop construction of the General Excavator Company? A. Yes, sir.

Q. You have seen the ditcher stick and scoop, have you? A. Yes.

Q. Have you any drawings or other illustrations showing that construction? A. I have chart 102, showing the ditcher stick and scoop construction of the General Excavator machine.

Q. Will you compare the ditcher stick construction as shown in that chart with the ditcher stick construction of the first Downie patent, 1,511,114? A. The stick construction of the General machine as shown in this chart comprises two channels extending parallel and bolted together through a wooden separator or filler between the channels with flanges turned in around the filler.

Q. How long is that wooden filler as compared with the stick? A. Full length of the stick.

Q. And it completely fills the space between the channels? A. Yes, sir.

Q. I ask you to compare that with the ditcher stick structure shown in the first Downie patent. A. The ditcher stick has two channels separated and secured by some batten plates extending over the width of the separated channels, but having no filler in between.

Q. At the time of the application for this first Downie patent in 1921, was it novel to provide a ditcher stick comprised of inwardly facing channels? A. It was not.

Q. I believe you have in your testimony referred to certain prior patents showing inwardly facing channels. Will you call attention to and explain such of those as are pertinent to the General Excavator ditcher stick? A. The Howard patent, 674,417; Coffey, 745,329.

Q. As you enumerate those, please point out the pertinent features of them and make a brief comparison

of this stick and the General Excavator. A. Referring to the Howard patent, 674,417, Fig. 4.

The Court: The same figure you referred to before?

Witness: Yes, the same figure. We have here the two channel irons. I cannot be sure of the designation there; it may be 8; probably 8; but at any rate there are two channel irons on the outside of the stick, with wooden filler in between the channel irons, and the channel irons bolted through with the bolts 7.

Referring to Coffey, 745,329, I find in Fig. 3 the two parallel channel irons, marked G, with a wooden filler; but differing, in that the through bolts are not shown passing through them.

In Robinson, 1,047,991, Fig. 6 shows the two parallel channels 13 with a filler between them composed partly of three sticks of timber, and partly of two steel plates, the whole structure being held together by countersunk rivets passing through it.

The reference to Boehm, 999,953, is not pertinent in that connection, as the wooden filler is not shown.

Q. At the time of the application for this first Downie patent, was it novel to provide a ditcher stick with the space-bearing bracket arranged to form a long boring for a pivot pin? A. It was not.

Q. Can you call attention to any patents showing such an arrangement? If so, please compare them with the bearing bracket of the General Excavator ditcher stick? A. Referring to patent 1,352,257 as to S. Ford, in which the bearing brackets 17 are shown secured to the inner flanges of the two parallel channels 18, which channels 18 form the ditcher stick. These bearing brackets 17 embrace and are pivoted on a pivot pin 33, which extends across between the two bearings 21.

A similar construction is shown in the catalogue of the American Ditcher Company, in which the dipper or ditcher stick is composed of two not quite parallel channels spaced apart by the usual structure of latticing, the scoop being rigidly secured to the lower ends of those channels, and the channels being provided at their upper ends with brackets, attached to the webs, I believe; not to the flanges; and anchor upon a long pivot pin extending across the entire width of the boom.

Mr. Reed: We should like to identify that catalogue by an exhibit number.

The Court: It has been identified.

Mr. Reed: I want to connect it with the answer.

The Court: All right.

Q. The catalogue to which you just referred has been identified as Exhibit 75, I believe, page 37; is that correct, Mr. Ferris? A. That is correct.

Q. Does the General Excavator structure have spaced irons or arms at the outer end of the boom, as shown at 5 in the Downie patent 1,511,114? A. It does not.

Q. Is the General Excavator ditcher stick secured to the scoop at a point in the rear of the open end of the scoop? A. It is not.

Q. Where is it secured? A. Secured even with the open end of the scoop, flush with it.

The Court: Referring to Exhibit 102?

A. Exhibit 102, yes.

Q. What is the arrangement of the rake teeth on the General Excavator, the side rake teeth? A. There are two chisel-shaped side rake teeth, beveled on the inside, and having the pivot pin of the bucket passing through the teeth.

Q. A moment ago you referred to Exhibit 102; you had reference to Chart 102, did you not? A. Yes, Chart 102.

The Court; Mr. Richey, have you settled your differences about the fourth Downie patent, or is that still in the case?

Mr. Richey: We have not been able to settle it, Your Honor. I thought Mr. Reed said his client did not intend to make any more of them. I wrote up an agreement to that effect. He said he would not agree to it.

Mr. Reed: He wrote up an agreement which amounted to an injunction. If we are going to be enjoined, we will take it in the regular course.

Mr. Richey: No, we did not. The agreement was in case of any future litigation between the two parties over the same patent, we could use the same depositions, and things of that. It was not an injunction. All we asked you to do was say how many you made; that you did not intend to make any more; that is what it amounted to. I thought that was what he said he would do. I now understand he will not.

Mr. Reed: We do not think we infringe. We are sued and are willing to stay in the record. We have made none of those teeth since the summer of 1929. Since

the date of the issuance of this fourth Downie patent, we sold only thirty-one of them. The last we sold in February, 1930.

Mr. Richey: Does the defendant, General Excavator Company, intend to make or sell or use any more of our teeth, which we charge infringe?

Mr. Reed: Not to my knowledge.

The Court: Of course I am only interested in the question whether or not it is still in the litigation.

Mr. Reed: My information is that they have no present intention of returning to that tooth.

The Court: That would not be satisfactory to you, Mr. Richey?

Mr. Richey: Well, no, that is not satisfactory. Cannot you say that your client does not intend to make, sell or use any more of them, or to encourage any one else to do that?

Mr. Williams: What you are asking is tantamount to an injunction.

Mr. Richey: If I want an injunction I will ask the court for an injunction, do you not see? There is a big difference between asking for an injunction and in asking him what are his intentions.

Mr. Williams: We do not want to find ourselves in the position of the meat packers by a consent decree. They are the only fellows in the world who cannot do those things.

Mr. Richey: Of course they had an injunction against them.

Mr. Williams: Sure.

Mr. Richey: I am sorry we cannot settle it. It looks to me like their position that I am asking for an injunction is all wrong; that is the way I feel about it. I don't think they are justified in taking that position.

Mr. Reed: That would be the effect as I see it of the statement you want us to make.

The Court: Let us proceed, then. All I am interested in is whether it is in or out.

Q. Referring now more particularly to the third Downie patent, 1,709,466, which has been referred to as the assembly patent, will you please state whether or not the General Excavator construction, with relation to the upper or top of the scoop, is it open or closed? A. Closed.

The Court: Practically the same as the Osgood?

A. Yes, sir.

Q. You stated a while ago that the defendant's scoop did not have an open top and did not have a bail; did you intend that to apply to both defendants, General Excavator and Osgood? A. I will repeat it for the General Excavator.

Q. I believe you stated that the wooden filler in the ditcher stick extended the full length of the stick? A. Yes, sir.

Q. Therefore there is no provision for access to the interior of the stick at the bottom? A. There is none.

Q. At what point, with relation to the height or to the top of the scoop, is the ditcher stick connected to the General Excavator scoop, close to it or well above it? A. Connected immediately on top of the scoop.

Q. How many bolts would it be necessary to remove to detach the scoop from the ditcher stick? A. Six from the ditcher stick, not including the back brace.

Q. Could you remove the scoop from the stick without disconnecting the back brace? A. In addition to those six at the end of the ditcher stick, it is necessary to remove ten from the foot of the back brace.

Q. How many of these bolts are in tension and how many in shear? A. Of the six bolts connecting the foot of the ditcher stick to the top of the scoop, four are primarily in tension and two primarily in shear. As explained, all of these bolts, when pulled up by nuts and wrenches, have tension in them. Of the ten bolts which must be removed to disconnect the foot of the back brace from the scoop, five are in tension, and five in shear, primarily; primarily in tension and primarily in shear.

Mr. Reed: I wish to offer at this time this Chart 102 as Defendant's Exhibit 81.

The Court: Any objection, Mr. Richey?

Mr. Richey: If Your Honor please, it is not a true representation of the General construction.

The Court: I think it was used for illustrative purposes only, was it not, Mr. Reed?

Mr. Reed: That is all, sir.

The Court: It may be admitted.

Mr. Richey: What is the exhibit number?

Clerk: 81.

Mr. Reed: If Your Honor please, it will be necessary to offer at this time certain depositions that were taken in connection with this tooth patent: Bolgiano, Rice and Fay.

The Court: Are you ready to read your depositions?

Mr. Reed: Yes.

DEPOSITIONS FOR THE DEFENDANTS

Taken at Cleveland, Ohio.

NOTICE OF TAKING TESTIMONY.

MR. PHILIP E. SIGGERS,
918 F Street, N. W.,
Washington, D. C.

MESSRS. RICHEY & WATTS,
1090 Union Trust Building,
Cleveland, Ohio.

Attorneys for Plaintiff:

Please take notice that defendant herein will take the testimony of the following witnesses:

William C. Bolgiano, 1675 E. 82nd St., Cleveland, Ohio.

J. M. Rice, 14775 Elderwood Ave., East Cleveland, Ohio.

George Fay, 25642 Lake Road, W. Bay Village, Ohio,

all of whom reside more than one hundred (100) miles from the place of trial herein for the use on behalf of the defendant at the final hearing of this cause, before Mercedes E. Hoffman, a Notary Public of Cuyahoga County, Ohio, who is not of counsel nor interested in this cause, at Room 1728 Standard Trust Bank Building, Cleveland, Ohio, beginning on the 19th day of November, 1930, at 10:00 o'clock A. M., and thereafter from day to day as the taking of the depositions may be adjourned; and such testimony will be so taken in accordance with the provisions of Sections 863, 864 and 865 of the Revised Statutes of United States and the Federal Equity Rules.

You are invited to attend and cross-examine.

EDWIN P. CORBETT,
Attorney for Defendant.

Dated November 15, 1930.

Service of a copy of the foregoing notice is hereby acknowledged this 17th day of November, 1930.

RICHEY & WATTS.

PRINTER'S NOTE:

A like notice was issued on behalf of the General Excavator Company and was signed by Mr. Edward L. Reed.

The following depositions were taken on behalf of both defendants, pursuant to the above notice at Room 1728, Standard Trust Bank Building, Cleveland, Ohio, beginning at 10:00 A. M., November 19, 1930, before Mercedes E. Hoffman, Notary Public for Cuyahoga County, Ohio. Counsel for all parties being present.

WILLIAM C. BOLGIANO, a witness called by defendants, being first duly sworn, testified as follows:

DIRECT EXAMINATION by Mr. Mahoney.

My name is William C. Bolgiano. I reside at Cleveland, Ohio. I am sixty years of age. I am a mechanical engineer. At the present time I am employed by the Industrial Brownhoist, formerly called the Brownhoisting Machinery Company. This company is located in Cleveland, Ohio. I am testifying under subpoenas in these cases. I am employed as a mechanical engineer by the Industrial Brownhoist Company, and have charge of the bucket department, also small cranes, steam hammers, man trolleys and such devices. I am foreman of that division. The Industrial Brownhoist Company has manufactured a shoveling attachment for its cranes. At that time the company was called The Brown Hoisting Machinery Company. I have been employed by The Industrial Brownhoist and its predecessor The Brown Hoisting Machinery Company for thirty years. The Brown Hoisting Machinery Company booklet No. 10 shows on page 4 the cranes with the shoveling attachment thereon. The picture to which I refer is the upper picture on the right hand corner of page 4. This booklet No. 10 bears a copyright date of the year 1924.

Mr. Mahoney: The front cover, the inside page of the front cover and page No. 4 of The Brown Hoisting Machinery Company booklet No. 10 are hereby offered in evidence as Defendants' Exhibit No. 42, and the Notary is requested to mark the same "Defendants' Exhibit 42, front cover, inside page of front cover and page 4 of Brown Hoisting Machinery Company booklet No. 10, copyrighted 1924."

Mr. Edgerton: The Exhibit No. 42 is objected to as immaterial, irrelevant and insufficiently proven.

(Narrative continued.) The blueprint No. 144,566 is a blueprint of The Brown Hoist Machinery Company

showing our one yard shovel bucket, and is dated 4-13-22, that is, April 13, 1922. This bucket shown in blueprint 144,566 was designed by me. This bucket has side rake teeth thereon. I indicate by the letter A the location of the side rake teeth on each of the showings of the bucket.

Drawing 144,566 shows the bucket for the shovel attachment that was used on Brown Hoisting Machinery Company No. 2 crane illustrated on page 4 of booklet No. 10. The order number shown on this drawing No. 144,566 for which this shovel attachment was made is No. D-4804.

Mr. Mahoney: Brown Hoisting Machinery Company blueprint 144,566 dated April 13th, 1922, is hereby offered in evidence and the Notary is requested to mark the same "Defendants' Exhibit 43, The Brown Hoisting Machinery Company blueprint 144,566, dated 4-13-33, general drawing of one yard shovel bucket."

Mr. Edgerton: The exhibit is objected to as secondary evidence as being insufficiently proven and as immaterial and irrelevant.

(Narrative continued.) Blueprint 144,515 is a print of The Brown Hoist Machinery Company, showing the teeth for one yard shovel bucket. The main title on this drawing of the ownership has been changed to the name of the Industrial Brownhoist Corporation which now are the owners of Brownhoist Company. The blueprint originally read The Brown Hoisting Machinery Company. I have indicated on this drawing 144,515 the location of the side rake teeth with the letter A. The design on this drawing is my own and the drawing was made under my supervision. The date on this drawing is April 4, 1922. The meaning of the notation on the drawing which you have marked with the letter B may be explained as follows. The first line R-H means right-hand tooth manganese steel casting pattern No. $\frac{29332}{1}$ which indicates the pattern number. The order number on this drawing is D-4804. The name of the purchaser of order No. D-4804 is S. G. Cool. He is located at Manitowoc, Wisconsin.

Mr. Mahoney: The Industrial Brownhoist Corporation blueprint 144,515 just identified by the witness is offered in evidence and the Notary is requested to mark the same "Defendants' Exhibit No. 44, Industrial Brownhoist Corporation blueprint

144,515, dated April 4, 1922, teeth for one yard shovel bucket."

Mr. Edgerton: The exhibit is objected to as secondary evidence, as insufficiently proven and as immaterial and irrelevant.

(Narrative continued.) The wooden pattern just handed me is a pattern of the tooth shown on sheet 144,515 designated by pattern No. $\frac{29332}{1}$. From all indications, this is the original pattern made up by The Brown Hoist Machinery Corporation. The No. 29332 on this pattern corresponds to that shown on drawing 144,515 as the right-hand tooth. The casting would be made from this pattern. The company that manufactured these particular side rake teeth shown on drawing 144,515, Defendants' Exhibit No. 44, would probably be the American Manganese Steel Casting Company, because at that time we were doing business with that company. The pattern No. 29332 was manufactured by the Brown Hoisting Machinery Company, and from our office records these teeth were ordered from the American Manganese Steel Casting Company. It was our practice after the teeth had been manufactured by the American Manganese Steel Casting Company that our company would assemble them on the bucket.

Mr. Mahoney: The pattern No. $\frac{29332}{1}$ just identified by the witness as the Brown Hoisting Machinery Company pattern for side rake teeth shown on Defendants' Exhibit No. 44 is hereby offered in evidence and the Notary is requested to mark the same "Defendants' Exhibit No. 45, Brown Hoisting Machinery Corporation pattern No. 29332-1 for right-hand side rake tooth shown on Defendants' Exhibit 44."

Mr. Edgerton: The exhibit is objected to as insufficiently proven and as immaterial and irrelevant.

(Narrative continued.) The blueprint which was just handed me is The Brown Hoisting Machinery Company sheet No. 150,495 dated 5-19-24, title "General drawing of half yard shovel bucket." This drawing shows side rake teeth on the shovel bucket. I have indicated the location of the side rake teeth on drawing No. 150,495 with the letter C in each of the showings. Shovel

bucket shown in drawing 150,495 is my design and the drawing was made under my supervision. Drawing 150,499 dated 6-12-24 is a print of the Brown Hoist Machinery Company. The title is "side teeth for half yard shovel bucket." The tooth shown on drawing 150,499 is the detail of the tooth shown on general drawing 150,495. The meaning of the notation which has been indicated by the letter D on drawing No. 150,499 is as follows: The top line is marked R-h means right-hand tooth, manganese steel casting pattern No. $\frac{30835}{1}$ as shown. Beneath this sentence the letter L-h means left-hand tooth manganese steel casting, pattern No. $\frac{30836}{1}$.

The print which has just been handed me is the Brown Hoist Machinery Company sheet No. 150,497 dated May 17th, 1924, title "door for half yard shovel bucket." The relationship between prints 150,497 and Nos. 150,499 and 150,495 is that the door shown in 150,497 is the one on which the teeth in the other drawings were bolted or riveted. This drawing shows the same tooth as shown in drawings 150,499 and 150,495. I have indicated by the letter E the side rake teeth shown on drawing 150,497. The drawing 150,497 dated May 17th, 1924 shows that it was made under a development order 200,370.

Mr. Mahoney: The blueprints which have just been identified by the witness are hereby offered in evidence and the Notary is requested to mark the same as follows: "Defendants' Exhibit 46, Brown Hoist Machinery Company blueprint 150,495 dated May 19, 1924, entitled general drawing of one half yard shovel bucket," "Defendants' Exhibit 47, Brown Hoisting Machinery Company blueprint 150,499, dated June 12, 1924, entitled, side teeth for one half yard shovel bucket," "Defendants' Exhibit 48, Brown Hoisting Machinery Company blueprint 150,497 dated May 17, 1924, entitled door for one half yard shovel bucket."

Mr. Edgerton: The Exhibits 46, 47 and 48 are each objected to as secondary evidence, as insufficiently proven and as immaterial and irrelevant.

(Narrative continued.) The Freedlund Construction & Supply Company of Miami, Florida was the purchaser

of Order No. 200,370, shown on drawing 150,497 and it was for this company that this device was made. The wooden pattern just handed me is No. $\frac{30835}{1}$ of the tooth shown on drawing 150,499. To the best of my belief this was the original pattern made from drawing 150,499. According to our records in the engineering department the casting from pattern No. 30835 was made by the American Manganese Steel Casting Company.

Mr. Mahoney: The original pattern No. $\frac{30835}{1}$ just identified by the witness as being the pattern from which the castings for side rake teeth shown on Defendants' Exhibits 46, 47 and 48 were made is hereby offered in evidence and the Notary is requested to mark the same "Defendants' Exhibit No. 49, the Brown Hoisting Machinery Company pattern No. $\frac{30835}{1}$."

Mr. Edgerton: The exhibit is objected to as being insufficiently proven and as immaterial and irrelevant.

It is stipulated that the original patterns of Defendants' Exhibits Nos. 45 and 49 shall be used in the Osgood case and that photographs thereof may be used in the General Excavator case with the same force and effect as the original.

Q. Defendants' Exhibits Nos. 45 and 49 are right-hand teeth, the left-hand teeth for the shovel buckets shown in Defendants' Exhibits 43, 44, 46, 47, 48 would be identical with the teeth shown in Defendants' Exhibits 45 and 49 except that they would be left-hand teeth, is that correct? A. Yes.

Direct examination closed.

Mr. Edgerton: Will counsel for the defendants indicate in their answer the section or reference upon which this testimony is based, that is the testimony offered by the Brown Hoist employees?

Mr. Mahoney: The word "answer" in the question by counsel for plaintiff refers to the pleaded answer of defendants in this case, I presume?

Mr. Edgerton: Yes, that was my interrogatory.

Mr. Mahoney: Defendants' answer pleads that patentee of plaintiff's patents in suit was not the original and first inventor of matters displayed therein and at

the proper time the proper statutory notice will be served on counsel for plaintiff in accordance with patent laws of the United States.

CROSS EXAMINATION by Mr. Edgerton.

I was out of the city yesterday and part of the day before. I arrived in Cleveland this morning. The title block on Defendants' Exhibit 44 was changed to read Industrial Brownhoist Corporation after the merger of the two companies. I do not know the date. I know this that the drawing has been changed within two years, that is, the title block was changed, not the drawing itself. The title block of this drawing was changed while that in the Exhibits 43, 48, 47 and 46 was left unchanged due to a direct error, because it was the instruction of the company that all tracings as taken from the vault for any purpose should have the title block changed to read the Industrial Brownhoist Corporation.

Referring to Defendants' Exhibit 44, the initials C. F. K. adjacent the legend "drawn by" are those of Charles Kast, a draftsman in the employ of the Industrial Brownhoist working under my instruction. He is still with us. The initials L. J. M. adjacent the legend "traced by" are those of L. J. Madden. He is not with us any longer and I do not know where he is. Referring to Defendants' Exhibit 48 the initials thereon, E. A. S. and W. C. B. are for E. A. Smith and William C. Bolgiano. E. A. Smith is not with the company any longer, and I am William C. Bolgiano. I do not know where E. A. Smith is now. The initials B. W. B. on Defendants' Exhibit 47 are for B. W. Bugbee. He is not with the company now, and I do not know where he is.

Q. Referring now to Exhibit 44, I call your attention to a circle inscribed in light lines between the side elevation and plan view of the lower figures in the drawing and ask you to state what this circle represents. A. That's the pin connection for the door for bottom sections of the shovel bucket.

Q. Referring to Exhibit 43, will you please indicate the location of the pin connection you have just referred to in your previous answer upon the bucket or scoop, by the use of the character F. A. (Witness marks blueprints as requested).

Q. Again referring to Exhibit 43, does the hexagonal head of the pin connection rest upon a plate which is mounted upon the side wall of the bucket? A. It does, it bears against this plate.

Q. Will you please indicate in the front elevation of the bucket and also the side elevation the plate you have previously referred to by the character G? A. (Witness marks blueprint as requested).

Q. Do you know of your own knowledge that the bucket or buckets which you have testified as being constructed in accordance with the drawings, Exhibits 43 and 44, were assembled in the relation as shown on these two drawings? A. Through personal inspection in our shop before shipment I know that these buckets are according to these drawings.

(Narrative continued.) The teeth were shipped from our plant as bolted to the door or bottom plate of the scoop. They were not connected to the side walls in any manner. Referring to Exhibits 46, 47 and 48, the outer teeth were secured to the door or bottom, and were not affixed to the side walls of the scoop. Referring to Exhibit 46, I have indicated the location of the hinge pin and marked it with the letter H. The head of this hinge pin abuts a reenforcing plate in this bucket. I have indicated by the letter J the location of the reenforcing plate in the various figures in the exhibit.

RE-DIRECT EXAMINATION by Mr. Mahoney.

Q. What is the custom of The Brown Hoist Machinery Company or the Industrial Brownhoist Company as to the dates appearing on the drawing, does that indicate the date the drawing was started or the date the drawing was completed? A. The date of the completion of the drawing.

Q. And the dates on Defendants' Exhibits 43, 44, 46, 47 and 48 indicate the dates on which the drawings were completed, is that correct? A. That is correct.

Deposition closed.

GEORGE FAY, a witness called by defendants, being first duly sworn, testified as follows:

DIRECT EXAMINATION by Mr. Mahoney.

My name is George Fay. I reside at 25642 Lake Road, Bay Village, Ohio. I am 27 years of age. I am testifying under subpoenas in these cases. I am assistant to the acting purchasing agent of the Industrial Brownhoist Corporation, Cleveland, Ohio. I have been employed by the Industrial Brownhoist Corporation five

years. The notation indicated by the letter B on Defendant's Exhibit 44 is a pattern number for the tooth shown on that drawing. The contract number for which the teeth were made on Defendant's Exhibit 44 is contract D-4804.

I have records to show that castings were made for the teeth shown on blueprint Defendants' Exhibit 44, particularly those indicated by pattern Nos. $\frac{29332}{1}$ and $\frac{29333}{1}$. I hereby produce those records. I know that the castings were made for the teeth shown in blueprint Defendants' Exhibit 44 from the records I have just produced, because the contract number corresponds with the number which is on the print and also the pattern number.

The paper to which I have just referred is an invoice No. 14012, dated April 26, 1922 from the American Manganese Steel Company to the Brown Hoisting Machinery Company. This invoice covers one tooth No. $\frac{29332}{1}$, and one tooth No. $\frac{29333}{1}$. These teeth were invoiced by the American Manganese Steel because they were purchased by The Brown Hoisting Machinery Company. The American Manganese Steel Company manufactured the teeth shown on Defendants' Exhibit 44 for the Brown Hoisting Machinery Company.

This invoice indicates that the teeth specified thereon as $\frac{29332}{1}$ and $\frac{29333}{1}$ were actually received in Cleveland by The Brown Hoisting Machinery Company on May 4th, 1922. This is indicated by a stamp which the casting department placed on the triplicate copy giving this date, which is clipped to the original. Referring to the original of this invoice No. 14012, it is indicated thereon that The Brown Hoisting Machinery Company paid for the teeth which are invoiced. This is indicated by the stamp reading "vouchered April 29, 1922, voucher No. 383." The total amount of this invoice was $5.40, which was paid on that date. This invoice No. 14012 was obtained by me from the records of the company that are on file. This is the original invoice taken from the file of the Brown Hoisting Machinery Company. The invoice and the entries thereon were made in the regular course of business contemporaneously with the transactions to which they refer and these records which I have produced are under my custody as an employee of the Industrial

Brownhoist Corporation. The photostatic copy of invoice 14012, dated April 26, 1922, I have compared with the original and it is a true and exact copy thereof.

Mr. Mahoney: The photostatic copies of invoice 14012, dated April 26, 1922, which have just been identified by the witness as a true and correct copy of the original comprising three sheets is hereby offered in evidence as Defendants' Exhibit 50 and the Notary is requested to mark the same "Defendants' Exhibit 50, The Brown Hoisting Machinery Company invoice No. 14012 dated April 26, 1922, to the American Manganese Steel Company for side rake teeth $\frac{29332}{1}$ and $\frac{29333}{1}$."

Q. I now refer you to Brownhoist blueprint 150497 Defendants' Exhibit 48 and Brownhoist blueprint 150499 Defendants' Exhibit 47 and ask you if an order number appears on either of these exhibits? A. Order number appears on print 150497, number being 200370.

Q. I now refer you to blueprint 150499, Defendants' Exhibit 47, is a detail of the teeth shown on blueprint Defendants' Exhibit 48, is that correct? A. Yes.

Q. I now refer you to Brown Hoisting Machinery blueprint 150499 Defendants' Exhibit 47, and ask you to explain, if you can, the meaning of the notation which is indicated by the letter D on this drawing? A. This notation is the pattern numbers of the teeth which are shown on the print.

Q. What are the pattern numbers shown? A. Pattern numbers $\frac{30835}{1}$ and $\frac{30836}{1}$.

Q. Have you any records which show whether the teeth shown on Defendants' Exhibits 47 and 48 were ever manufactured by the Brown Hoisting Machinery Company or manufactured for the Brown Hoisting Machinery Company? A. Yes.

Q. Will you kindly produce this record? A. (Witness produces record).

Q. I now hand you one of the records which you have just produced and ask you to state what it is. A. This is an invoice from the American Manganese Steel Company to the Brown Hoisting Machinery Company covering one tooth, pattern $\frac{30835}{1}$.

Q. What is the number and date of this invoice? A. Invoice No. 32170 dated June 27, 1924.

Q. When does the invoice show the shipment was made to the Brown Hoisting Machinery Company? A. June 27, 1924.

Q. Is there any contract or order number on this invoice? A. Brownhoist contract or order No. 200370 appears on this invoice.

Q. That corresponds to the order number appearing on Defendants' Exhibit 48, is that right? A. Yes.

Q. I now hand you the other record which you produced and ask you to state what that is. A. It is an invoice from the American Manganese Steel Company to the Brown Hoisting Machinery Company, invoice No. 37886, June 27, 1924, covering one tooth, pattern $\frac{30835}{1}$.

Q. What is the amount of this invoice? A. $8.78.

Q. Is there anything on the invoice to indicate that this amount has been paid to the American Manganese Steel Company? A. Yes, the invoice is marked vouchered June 30, 1924, voucher No. 456.

Q. Is there anything on this invoice which indicates the date the tooth casting $\frac{30835}{1}$ was received by the Brown Hoisting Machinery Company? A. This invoice was marked material described above received in good order July 1st, 1924, with signature of receiving clerk. This marking is found on the duplicate copy of the invoice.

Q. Where did you obtain invoice B-2170 dated June 27, 1924 and invoice No. 37886 dated June 27, 1924, which you have been testifying about? A. From the company invoice files of the Industrial Brownhoist Corporation.

(Narrative continued.) These records are under my custody and control. The invoices B-2170 and 37886 were compiled in the regular course of business and made contemporaneously with the transactions to which they refer, as far as I know. I found these papers in the original files of the Industrial Brownhoist Company.

Q. I now hand you what purports to be a photostatic copy of the original invoice 37886, two sheets, and a photostatic copy of invoice B-2170, and ask you to compare these photostatic copies with the original invoices and state whether or not they are true and exact copies thereof? A. Yes, they are.

Mr. Mahoney: The photostatic copies of invoices 37886, two sheets, dated June 27, 1924, and

invoice B-2170, one sheet, dated June 27, 1924, are hereby offered in evidence as one exhibit and the Notary is requested to mark the same "Defendants' Exhibit No. 51, Brown Hoisting invoices 37886 and B-2170, dated June 27, 1924, for side rake tooth $\frac{30835}{1}$ on Brown Hoisting Machinery Company order 200370."

Q. I now refer you to Defendants' Exhibit 50 and Defendants' Exhibit 51 and ask you to explain the apparent mutilation of the second sheet on each one of these exhibits. A. This is due to the fact that the price extension has been removed from the duplicate copy since it is not necessary in the department to which it is sent.

Q. That removal of the price extension portion of this invoice in the shipping department is a regular and established practice with the company, is that correct? A. It was up until a year or so ago, and was the practice at the time this invoice was filed.

Cross Examination by Mr. Edgerton.

Q. Did Mr. Sessions of the firm of Richey & Watts communicate with you yesterday regarding the testimony you were to give in these suits? A. Yes, he did.

Q. And did he ask you for an interview? A. He didn't exactly ask for that, no.

Q. What did he ask you? A. He asked me if I would care to talk to him about the testimony that I was going to give.

Q. And what was your reply? A. I told him that the same thing applied to me that applied to Mr. Rice.

Q. And what was that? A. Mr. Rice stated that he did not care to give any information regarding the testimony.

Q. You refused then to discuss this subject with Mr. Sessions, is that correct? A. Yes.

Q. Now with respect to the receipt of castings, the payment of the invoices, you have no intimate knowledge, have you, apart from what the face of the documents purport to show which have been identified as Defendants' Exhibits 50 and 51? A. No.

Deposition closed.

J. M. RICE, a witness called by defendants, being first duly sworn, testified as follows:

DIRECT EXAMINATION by Mr. Mahoney.

My name is J. M. Rice. I reside at 14775 Elderwood Ave., East Cleveland, Ohio. I am 38 years of age. I am testifying under subpoenas in these cases. I am an accountant, employed by the Industrial Brownhoist Corporation, Cleveland, Ohio. I have been employed by this company for over 21 years.

Defendants' Exhibit 44 and Defendants' Exhibit 43 show thereon contract number D-4804 which was the contract for which the parts illustrated on these exhibits were to be applied. I have records to show with whom this contract was made. This is our invoicing record here, book copy of the original invoice rendered to the customer. The sheet number is page 2788, the date of the invoice is June 6, 1922. The invoice rendered on order No. D-4804 was to S. G. Cool, 128 North Wells Street, Chicago, Illinois, but the goods were shipped to Janesville, Wisconsin, June 2nd, 1922. The invoice called for one Brownhoist shoveling attachment with one yard shovel bucket for a No. 2 Brownhoist locomotive crane No. 8732. The total amount of the invoice was $980.00. Our records show that this amount of this invoice was paid by the customer on July 5th, 1922. We received a check in the amount of $994.00 which covered our invoice of June 6th in the amount of $980.00, and another invoice of June 16th in the amount of $14.00. The record from which I have just been testifying was obtained from the company files and is a permanent record. These records are under my custody and control as an employee of the Industrial Brownhoist Corporation, and were made in the regular course of business contemporaneously with the matter to which they refer.

Q. I now hand you what purports to be a photostatic copy of the invoice sheet 2788 for invoice dated June 6th, 1922, order D-4804, and ask you to compare it with the original from which you have been testifying and state whether or not this photostatic copy is a true and exact copy of the original invoice? A. Yes, it is.

Q. The second item on this invoice sheet 2788 refers to a contract other than D-4804, is that correct? A. Yes, that's correct.

Q. What was the record from which you obtained the information as to payment of invoice 2788 on con-

tract D-4804? A. That is our bookkeeping record which is kept under the name of the customer to whom the invoices are rendered.

Q. This account number page 2 of the bookkeeping record which you have just referred to is the original taken from your files, is it not? A. Yes, sir.

Q. And is made contemporaneously with the matter to which it refers in the regular course of business, is that correct? A. Yes, that's correct.

It is hereby stipulated that a photostatic copy of Brown Hoist Machinery Company page 2 of invoice record with S. G. Cool, 128 North Wells Street, Chicago, Illinois, may be offered in evidence with invoice sheet No. 2788 as one exhibit.

Mr. Mahoney: The photostatic copy of Brown Hoist Machinery Company invoice sheet 2788 and photostatic copy of page 2 of the bookkeeping record of the account with S. G. Cool is hereby offered in evidence as one exhibit and the Notary is requested to mark the same "Defendants' Exhibit No. 52, invoice sheet 2788 and account book page No. 2 of The Brown Hoisting Machinery Company referring to order D-4804 to S. G. Cool."

(Narrative continued.) Referring to Defendant's Exhibit 48, Brownhoist blueprint 150497 dated May 17, 1924, the material shown on this blueprint was made for the Freedlund Construction Company, Miami, Florida. This material shown on Defendants' Exhibits 47 and 48 was shipped to the Freedlund Construction Company at Miami, Florida, some time in August, 1924. I ascertained this date from the records of the Industrial Brownhoist Corporation.

Cross Examination by Mr. Edgerton.

I have been an accountant for the Industrial Brownhoist Corporation, outside of the first year that I was employed as a boy there, the entire period of my employment. I was in that department in the year 1922. The testimony I have given regarding the Freedlund Construction Company was not from memory but from looking up the records at our plant.

Q. But you have produced no documentary evidence at this hearing relating to that kind of transaction, have you? I refer to the Freedlund transaction. A. No, inasmuch as upon reference to our records I found that this

is a replace no charge shipment it was not necessary to render an invoice.

Q. Do I understand then that you have no invoice for the Freedlund transaction? A. Not for the replace shipment.

Q. You have testified that the material on contract 200370 was shipped to the Freedlund Company in Florida sometime in August of 1924. Now do I understand you to mean that this was a replacement order that you referred to when you so testified? A. Yes, that was a replace shipment, what we term a replace shipment.

Q. And because it was a replace shipment you have no invoice and have not produced any other documentary evidence, is that correct? A. Yes.

Q. Did Mr. Sessions of the firm of Richey & Watts, counsel for the plaintiff in these suits, interview you yesterday? A. Yes.

Q. Did he make inquiry as to the nature of the Industrial Brownhoist or its predecessor's developments which were considered relative to the issues in these suits? A. No.

Q. What did he ask you? A. He wanted to know what I knew about this suit.

Q. And at that time you had already been interviewed by counsel for the defendant, had you not? A. No.

Q. When were you interviewed by counsel for defendant? A. This morning is the first time I met either one of them.

Q. Had you been interviewed by anyone else acting for them previous to Mr. Sessions' interview? A. That is, outside of our own company?

Q. By anybody? A. Yes, by the man in charge of our patent department.

Q. Did you refuse to discuss the matter with Mr. Sessions? A. Yes.

RE-DIRECT EXAMINATION by Mr. Mahoney.

Q. Were you ever instructed by counsel for either the Osgood Company or the General Excavator Company not to give any information regarding the matters about which you have testified today to counsel for plaintiff, Richey & Watts, or their representatives? A. No, I was not instructed.

Q. You were acting then purely on your own responsibility in refusing to give information to Mr. Ses-

sions of the Richey & Watts firm? A. Yes, that is correct.

Q. And at the time you were approached by Mr. Sessions you were under subpoenas in both of these suits, is that correct? A. Yes, that is correct.

Re-Cross Examination by Mr. Edgerton.

Q. Was it not upon the advice of the man in charge of your patent department that you refused to discuss this matter with Mr. Sessions? A. No, it was my own responsibility entirely.

Deposition closed.

Certificate of Notary omitted.

Mr. Reed: I will offer at this time the following exhibits which were offered in connection with the Bolgiano, Fay and Rice depositions:

Exhibit 42, which is the front cover and inside thereof and page 4 of booklet No. 10; as Exhibit 43, a blueprint 144566; as Exhibit 44, Brown Hoisting Company blueprint 144515; Defendant's Exhibit 45, Brown Hoist Pattern No. 29332; Exhibit 46, Brown Hoist blueprint 150495; Exhibit 47, Brown Hoist blueprint 150499; Exhibit 48, Brown Hoist blueprint 150497; as Exhibit 49, Pattern No. 30835; as Exhibit 50, Brown Hoist invoice 14012 of April 26, 1922; as Exhibit 51, Brown Hoist invoices of 37886 and B2170 of June 27, 1924; as Exhibit 52, invoice sheet 2788 and account book, page 2, with reference to the order of S. G. Cool.

I also offer the depositions of William C. Bolgiano, George Fay and J. M. Rice.

For the sake of the record I wish to call attention to the fact that the two patterns, Exhibits Nos. 45 and 49, are entitled in the Osgood case; but inasmuch as they will not be used in that case we are substituting the original patterns for the photographs which has been offered originally in the General Excavator case.

The Court: Why not offer them both?

Mr. Mahoney: We are not sued on them.

The Court: You are not withdrawing the photographs, are you?

Mr. Reed: No. We have the photographs here. There would be a duplication in numbers. Would you prefer to have them left in the record?

The Court: I thought that the Circuit Court of Appeals might like to have the photographs as physical exhibits.

Clerk: You do not want them marked?

The Court: They were marked before.

Clerk: Before the notary; but we have the same numbers.

The Court: You could mark those physical exhibits with an A-number.

Mr. Reed: I will just make an offer of them then.

I also offer as Defendant's Exhibit 45-A a photograph of the pattern of Exhibit 45; and as Exhibit 49-A, a photograph of the pattern of Exhibit 49.

DIRECT EXAMINATION of Walter Ferris (Resumed).

Q. Mr. Ferris, are you familiar with the fourth Downie patent, 1,716,432? A. I am, yes.

Q. Have you read and do you understand the claims 1, 14, 16 and 18 of that patent? A. I do.

Q. Will you state in a general way the construction which is described in claims 1, 14, 16 and 18 of this fourth Downie patent? A. These claims describe in a general way teeth for attachment to the sides of the scoop, having leading points to enter the earth with the cutting edges disposed horizontally, followed by vertical edges shaped in such a way as to force the material inward towards the scoop.

Q. Have you knowledge of any prior art patent or patents showing side teeth which divided the material along a vertical plane and turn the same toward the dipper, either in connection with or without an advance penetrating point? If so, will you please explain the two structures of those patents? A. I refer to Butler, 493,421, the structure of which is shown on chart 58.

The Court: Is that Butler?

Witness: I beg your pardon—chart 59. The cutting elements of this scoop are all comprised in a bent plow or blade extending across the cutting edge of the scoop, and up on both sides of the scoop. At each corner there are formed two tooth surfaces.

The Court: Will you use the pointer?

Witness: I beg your pardon. I cannot remember. At each corner are formed two tooth surfaces, a horizontally-divided edge markd n-prime, and a verfical beveled dividing edge marked t. The effect of these edges is to perform a function very similar to the function stated

in these claims; the horizontal edge dividing the earth, and the vertical edge sharply beveled inward tending to crown it into the scoop. I also note that the vertical side extensions of this cutting blade lie in advance of the pivot pin on which the drop bottom swings and protect it.

I also refer to—I shall have to ask whether this patent 508,685, corresponds to the re-issue 11516? I am using a re-issue number.

Mr. Reed: I think not. I will have to see the chart. No.

Witness: I will have to cancel reference to Davey chart 58.

The Court: Cancelled.

Witness: E. J. Davey, 508,685. This patent shows a scoop having across the front a cutter blade C, turned up at both ends and secured to the sides of the scoop. Attached to this cutter blade or lip are five earth-dividing teeth C-prime, with their cutting edges lying in a horizontal plane. Two of these earth-dividing teeth are fitted closely into the corners where the end-extensions of the cutter blade C turn upward. The vertical extensions are beveled backward toward the rear end of the scoop at an angle of approximately 45 degrees, and are also beveled inwardly to form bevel cutting edges which divide the earth in a vertical plane and crowd it inward into the scoop. These upward extensions on the two ends, taken in connection with the horizontal earth-dividing teeth C-prime fitted into the corners, perform quite accurately the functions described in the claims.

The Court: Would you say they stand out to the side as far as these rake teeth do in this fourth Downie patent?

Witness: No, sir, they are not nearly as thick as the rake teeth, but they are thicker than the bail pivots which lie in the rear of them and which they serve to protect.

The Court: I see. All right.

Witness: The third reference is patent to Hemme, 1,233,574. This structure is called an earth-cutting blade and resembles quite closely the construction of the cutting blade just described in connection with Davey, 508,685.

The Court: What is the use for that third cutting blade?

Witness: This is probably a road scraper. I have not read this patent thoroughly through.

The Court: Used for a leveling process?

Witness: Yes, sir, for shaving, skimming, grading roads, apparently, from the picture. The two ends of this cutter blade are turned up into edges beveled vertically, and also beveled inward forming the side cutting teeth, and there is an earth-penetrating tooth fastened to the blade closely adjacent to each corner. In this case, I think the function of protecting the pivots is now shown because there are no pivots in the rear of the blade.

Q. Have you ever seen a General Excavator scoop equipped with side rake teeth of the type shown in Defendant's Exhibit P-27,—referring more particularly to the photograph marked F? A. I have.

Q. Do you get the question? A. Seen a General Excavator scoop equipped with this tooth.

Q. Yes? A. Shown on photograph F of P-27.

The Court: Let me see that (shown court).

Q. Can you produce a tooth of the type shown in Plaintiff's Exhibit P-27? A. We have such a tooth on the floor.

The Court: P-27-F.

Mr. Reed: Yes, P-27-F.

(Shown court.)

Thereupon, court was adjourned.

March 12, 1931, 9:30 a.m., trial resumed.

Mr. Reed: Mr. Richey, I understand that you do not claim there is any infringement in the present General Excavator side rake teeth.

Mr. Richey: If my understanding of it is right.

Mr. Reed: It is shown in this assembly chart of the General Excavator Company, and there has also been one lying over here on the floor since yesterday noon. I presume you have seen it.

Mr. Richey: Of course, as I say, we bought one the other day from one of their branch offices that wasn't like this.

Mr. Reed: You said the American Manganese Steel. The American Manganese Steel never cast any teeth for the General Excavator Company.

Mr. Richey: Well, the facts are that it was sold by one of your branches—branches or dealers.

Mr. R. R. Downie: General Excavator Sales Company, Mr. Richey.

Mr. Richey: Is that a branch, or dealer?

Mr. Reed: I don't know. I understand there are no branches, but I cannot make a positive statement on that.

Mr. Richey: We don't charge that this tooth shown in your chart Defendants' Exhibit 81 is an infringement.

The Court: Well, does that eliminate that from the case then?

Mr. Richey: No, sir, it does not eliminate that tooth there on the desk.

Mr. Reed: The tooth on the desk, concerning which the witness has been testifying, is the tooth shown in your Exhibit 27, a few of which were used at one time by the defendant, The General Excavator Company.

The Court: But are not used any more?

Mr. Reed: Not used at the present time; haven't been used.

Mr. Richey: Have you given that an Exhibit number?

The Court: It is marked 4825L.

Mr. Reed: It has not been offered yet.

The Court: Are you going to predicate infringement on the isolated sale of some subsidiary, or something like that?

Mr. Richey: No. In the beginning they sold a number of those, by their own admissions.

Mr. Reed: Not in the beginning, but at an intermediate point we used a comparatively few of them.

Mr. Richey: Well, I will say in the beginning of the term of the patent.

Mr. Reed: Yes.

The Court: That was 31 of them?

Mr. Reed: Since the patent issued, yes.

Mr. Richey: As I said yesterday, we indicated that we were willing to drop this patent out if they said they didn't have an intention of making or selling or using any more of them. And I understood Mr. Reed agreed to that, but then when we come to make that statement he didn't want to agree to it, and in the face of the fact that we just bought one the other day, we think that there may be some question about that.

The Court: Well, of course, that may be something that had gotten into somebody's stock and remained there a long time.

Mr. Richey: Well, it may be that, and on the other hand it may be that his clients are mistaken. Might still be making those. He hasn't shown by any proof—of course I have no doubt what Mr. Reed says is so, but

what he states is in conflict with what we have found. If he wants to put somebody on the stand to show that they only made and sold 31 of them during the term of the patent, and have not made or sold any of them since February, 1930, and don't intend to use or make any more of them, why I think we are willing to dismiss the case without prejudice, as far as that patent is concerned, but we cannot get him to do that.

Mr. Reed: We don't think we infringed the patent, and we don't see any reason for tying ourselves up indefinitely. I haven't authority to do so. The only man who has authority to do it is not here. And this matter—there was nothing said about the intention when we discussed this matter. I stated yesterday that I was informed that it was not the present intention to resume this tooth. Beyond that I have no authority, and if he insists on anything further than that, why we will have to go ahead.

Mr. Richey: I don't want to bother the court with anything that is trifling—we have already done a great deal on this thing, and have a good deal of money behind it, and we don't want to go through that if we are assured that the thing is trifling. But we *think* they must assure us on that point.

Mr. Reed: I submitted to you a memorandum taken from the records of the General Excavator Company, which showed in detail the sale of 31 teeth. Now, that is all we have.

Mr. Richey: But declined to say you didn't intend to go ahead.

Mr. Reed: Yes—bind ourselves for all future.

The Court: As far as you know, you have no present intention?

Mr. Reed: That is all. That is as far as we care to go. If we are going to be enjoined—

Mr. Richey: If we dropped the case with respect to that patent, they might go out tomorrow and go at it again.

The Court: Well, you could start out, you know, day after tomorrow and you have a stipulation about the depositions, haven't you?

Mr. Richey: Yes, sir.

The Court: Wouldn't hurt you so much to be back here some time. Always glad to see you here.

Mr. Richey: Well, that is certainly an inducement. That is a very persuasive item. But I should think that

these gentlemen could say for the record that they don't intend to go ahead.

The Court: Some of this patent might not be sustained, you know, some time. I don't know whether it will be or not. And they probably don't want to cover that contingency.

Mr. Richey: Well, we would like to have it settled, one way or the other.

The Court: Well, it is up to you men.

Mr. Richey: Suppose you put somebody on the witness stand and make a record of those things. Let's make the proof.

Mr. Reed: I don't think that is necessary. We haven't anybody here that could testify to the records. This memorandum was taken from the records by a man in Marion, and there is no one here who can testify of his personal knowledge as to that record. It is a mere matter of accounting; don't make any difference here.

Mr. Richey: Well, I think we might clear the situation up, Your Honor. If they put somebody on the witness stand to prove what they propose to do and what they have done. I have no doubt that Mr. Reed has confidence in what he says, but I don't know whether his client would abide by what he thinks or not.

Mr. Reed: I think, Your Honor, we will go ahead with the case.

The Court: All right.

Walter Ferris, a witness for defendants, recalled, and testified as follows:

Direct Examination by Mr. Reed.

Q. Mr. Ferris, referring to the tooth which you have before you and which was at one time manufactured by the General Excavator Company, what have you to say as to the shape of that tooth, particularly with relation to its tapering toward the upper end? A. I would say that it does not taper toward the upper end.

Q. Does it have a material dividing edge extending longitudinally for the greater portion of its length? A. It doesn't, as far as I can see.

Q. Well, does it have any shearing edge extending longitudinally? A. No, it has a round notch near the point.

Q. How many earth-dividing edges have you? A. I would say one.

Q. And that is the transverse point? A. Cutting point.

Q. At about what angle is the upper surface of that tooth with relation to the horizontal; that is, the horizontal when the bottom of the dipper is in a horizontal position? A. As far as I can see, without the assembly, I guess it would be 35 degrees. That is, taking the bottom of this cutting edge as horizontal; of course, that should be elevated a little bit. 35 or 40 degrees, possibly. I think 35 is the nearest degree I can make.

Q. Well, in the practical operation of digging, do you consider it important that the earth dividing edges should be sharp? A. It depends on where they are. In the practical operation of digging, the actual separation of the material, the sharper the edge, the better.

Q. Now, you have referred to a notch or recess, or curved indentation on the inner side of that tooth. After the tooth has penetrated the material, would this recess give any assistance in the digging operation? A. I think not. The material at that time would be broken up, and come loose right up at this point; any material that is loosened at that point would be in a broken condition when it strikes here (indicating).

Q. By "here", you mean at the location of the recess? A. The location of the notch.

The Court: How many inches from the point, so that the record will show; about how many inches?

The Witness: The widest part of the notch is about 6 inches back from the point of the tooth, by eye.

Q. If that recess were filled in, what would be the effect on the action of the tooth? A. I don't think it would have any perceptible effect; you couldn't tell it. Weld it up solid on the tooth, and you give the same digging effect, as far as anybody could find out.

Q. Then as far as the digging operation is concerned, you are of the opinion that that notch or recess is absolutely valueless? A. Quite unimportant, yes.

Q. Referring again for a moment to the assembly chart of the General Excavator scoop, which is Exhibit 81, I believe.

The Court: Yes, that is right.

Q. Will you please state whether the bolts 6 which extend through the angle plates of the dipper are extended through the channels of which the ditcher stick is formed, or through the spaces between the channels? A. They extend through the channels.

Mr. Reed: I would like to offer in evidence the tooth formerly used by the General Excavator Company, and concerning which the witness had been testifying, as Defendant's Exhibit 82.

The Court: You think we ought to save this exhibit number on the side, Mr. Richey, for this suit?

Mr. Richey: I think that is the code number.

The Court: It is 48251.

Mr. Richey: That certainly won't get lost off.

Mr. Reed: I would also like to offer as Defendant's Exhibit No. 83 a certified copy of the file wrapper and contents of the Downie Patent 1,716,432.

The Court: The fourth Downie patent?

Mr. Reed: Fourth Downie patent, yes, sir.

The Court: Are those file wrappers of those other patents in the record of the previous case, Mr. Richey?

Mr. Richey: The Clutter and first two Downie patents. I know it was the Clutter patent, because there was an argument made on the file wrapper. I am satisfied the other two were, but just to be certain I will check.

Mr. Reed: That is all, Your Honor.

Mr. Corbett: I have about three questions, Your Honor.

DIRECT EXAMINATION by Mr. Corbett.

Q. You went to the Sam Davis coal yard and examined the structure of the connecting bolts—bolts for connecting the ditcher stick and brace of the plaintiff's modern machine by disconnecting these parts the other day, did you not? A. I did.

Q. Will you please state whether the bolts which effect this connection were in shear or in tension, giving your reasons therefor? A. They were in shear and in tension. The reason they are in tension is because they are pulled by that notch which always puts a bolt in tension, and also the weight of the dipper undoubtedly hangs on them. I know they are in shear, because they are finished to turn on the outside, and are in bored holes which fit the holes within a 1/32 of an inch, so that before the scoop could make any turning movement relatively to the stick, the bolts would get the side stress which indicates shear. And I also know that they were in shear because we removed one bolt, and the side surface of that bolt had a high polish on, which only comes

from reaction of the shearing stresses, trying to shear it off.

Q. Have you examined the bolts on the defendant's structure, particularly the bolts which extend substantially parallel with the ditcher stick, and if so, will you say whether those bolts were in tension or in shear, giving your reasons? A. Those bolts were also both in tension and in shear. The reason of their being in tension is the same as just stated for the plaintiff's machine, in that they are pulled up with bolts, and the weight of the dipper more or less hangs on them, probably largely. I know that they are in shear because they have to be driven into the holes to get them in. The holes in this case are not accurately bored as they are in the plaintiff's machine at the Sam Davis yard; they are a little larger than the bolts, and the bolts are rough, but the bolts have to be driven in to get them in place, and they must take shearing stress.

Q. I refer you to Downie patent 1,709,466, and particularly to Fig. 6 thereof, and call your attention to the members 28 which are in the inner surfaces of the spaced channel members. Will you compare that structure with the Osgood structure as to that point, and state whether or not any differences exist, pointing out such differences if they do exist? A. In the Osgood machine?

Q. Yes. A. In the Osgood machine the two inner connecting or clip angles 27 are replaced by a single U-shaped member extending across the space between the inner webs of the channels and extending up both sides; in other words, the two angles are made into one U-shaped strap.

Q. Which would you say was the stronger construction? A. The U-shaped strap is stronger.

Mr. Richey: Those file wrappers of the first and second Downie patent were before the court in the Cleveland case, Your Honor.

Mr. Reed: I would like to ask one more question of Mr. Ferris, Your Honor.

The Court: All right.

DIRECT EXAMINATION by Mr. Reed.

Q. Mr. Ferris, in the connection of the General Excavator digger stick to the scoop, was there any feature of attaching bolts, or bolt, within and between the channel irons in which the ditcher stick is formed? A. There was not.

Mr. Mahoney: We hereby offer in evidence Defendant's Exhibit 84, chart No. 20.

We hereby offer in evidence defendant's chart No. 60 as Defendant's Exhibit 85.

Charts Nos. 45 and 46 are offered in evidence as Defendant's Exhibit 86—45 will be A, and 46, B. We offer in evidence defendant's chart No. 40 as Defendant's Exhibit No. 87.

We offer in evidence defendant's chart No. 17 as Defendant's Exhibit 88.

We offer in evidence as Defendant's Exhibit 89, defendant's chart No. 14.

We offer in evidence as Defendant's Exhibit 90, defendant's chart No. 13.

We offer in evidence as Defendant's Exhibit 91, defendant's chart No. 101.

Cross Examination by Mr. Richey.

Q. Mr. Ferris, referring to the thing that you have just been discussing, about these bolts, the assembly bolts connecting the stick to the bucket—you say that there are stresses and strains, I mean shearing stresses and tension stresses on the bolts. That would be true in all three of the constructions, that is, the plaintiff's and each of the defendants', according to your way of looking at it? A. Yes, sir.

Q. And in that respect they would all be alike? A. Yes.

(Narrative continued.) I have not made any calculations to determine what proportions of the force is shearing and what proportion is tension in the plaintiff's machine. I know of Arthur W. Robinson of Milwaukee, Wisconsin. He is dead. I knew him casually while he was alive. I met him a few times. He was employed by the Bucyrus Company before I was. I know of his work of course. I am not employed by the Bucyrus Company now. I am not employed by any manufacturer of excavating machines now. I said I took out about seventy-five patents. The patent to Walter Ferris 809436 assigned to the Bucyrus Company is one of my patents.

Q. That patent consisted merely, or that invention—of course you took an oath that you believed you were the inventor at this time? A. I didn't understand the question.

Q. You took the usual oath that you believed you were the inventor involving the construction at the time you filed this application? A. Yes, sir.

Q. And you continued to hold yourself out as inventor until the patent expired? A. Surely.

Q. Now, the only improvement in this construction was in making adjustable one end of this link k over the construction in the patent to Mr. Robinson that I just mentioned. That is, you took the Robinson patent, and made an adjustment between one end of the link—between the front end of the bucket and the stick? A. The Robinson patent also has an adjustment. I designed a different adjustment.

Q. Yes, but that is what your invention was in that patent? A. Just a method of making that adjustment, as I remember it. I haven't read this claim for some time.

Q. Well, now, the first claim calls for a number of elements, and I am going to ask you if they were not all old. It calls for a bridge dipper, a handle, a brace, a journal bearing, and means for adjustably securing said bearing to the dipper handle. Now, all of those elements were old when you made this, weren't they? A. What does the journal bearing mean?

Mr. Corbett: Your Honor, I believe that is immaterial.

Q. A journal bearing to which the other end of said braces is pivoted. I assume that one at "1". A. I think it probably means the one at "g."

Q. Well, in either event, they were all old, weren't they, as elements? A. I don't remember anything—Oh, you mean a journal bearing in a machine?

Q. Yes. A. Oh, sure.

Q. So this invention consisted of a new combination of old elements? A. Are those all the elements in my claim?

Q. Well, read the claim. Those are all the elements. A. A means for adjustably securing said bearing to the dipper handle.

Q. Yes, that was old, wasn't it? A. Not the means for adjustably securing it.

Q. Not that particular means, but that particular sort of adjusting means was old in the art? A. An adjustable means was old.

Q. Well, that particular adjustable means was old? A. No, I think not.

Q. You think that was a new element? A. Sure.

Q. Just having two sets of cog teeth, so you could set one— A. I think there were two sets of intermeshing cog teeth.

Q. Now, that is not cited in that claim, is it? A. Let me see the claim. (Reads) "Means for adjustably securing said bearing to the dipper handle."

Q. You say that is a new element, do you? A. To the best of my knowledge.

Q. All the rest of the elements in there were old? All the rest of the elements in that claim were old at the time? A. As I remember it, yes, sir.

Q. Now, you have taken out a number of patents in which the only thing that was new was the combination of old elements, haven't you? A. Quite likely, but I would like to see the patents before I say.

Q. Well, you recognize that doctrine, don't you? A. Sure; in the combining of old elements, introducing new and beneficial results.

Q. Now, the only result you produced here was a different kind of adjustment on one end of the link? A. Produced an adjustment that wouldn't wear loose and rack, yes.

Q. That was the only invention in this involved? A. That is all we were after.

Q. You provided that with different adjustments so that you could vary the angle of the cutting edge to the stick, did you not? A. No, sir, so we could hold the adjustment when it was made.

Q. But incidental to that—and I suppose that was the feature of Mr. Robinson's patent—you did provide for adjustment there at the end of the link, so that you could change the angle of the teeth to the stick? A. Surely.

Q. Why did you want to change that angle? A. So that we could alter the cutting rake and the teeth.

Q. Why was it important to do that? A. Because of different digging conditions; different kinds of soil.

Q. Is there any importance in the digging to put that at the proper angle to the earth? A. Yes, sir, there is some importance.

Q. Why so? A. Because of the different degrees of difficulty in penetrating the different kinds of material.

Q. Of course it is important that the teeth should attack the material at the best angle, is it not? A. Yes, sir. Many times you do not know what the best angle is.

Q. So you adjust it so as to give it what you think is the best angle? A. Yes, sir, it is important for digging to present the teeth at the best angle, or the angle which the owner of the machine thinks the best.

Q. You provided this adjustment so that when you once got what you thought was the best angle, you had a firm and rigid connection, did you not? A. That is right.

Q. That is important, when digging, to have a rigid relation between the dipper and the stick, after you once made the adjustment? A. That patent is not directed towards rigidity of the relation.

Q. I am asking the question independently of the patent. A. Please repeat the question.

Q. After you have once gotten your adjustment you think best for the attack on the material, it is important to have a rigid relation between the stick and the dipper so as to maintain that adjustment, is it not? A. Yes, sir.

Q. That is what this patent was for? A. No, sir.

Q. That was the only improvement you had over the Robinson patent, was it not? A. That patent, as I tried to say a minute ago, was directed toward getting a connection which would not wear and become loose, would maintain itself after it was made; not the rigidity, but the durability.

Q. If it was not only important to have it rigid, but to have such a connection it will not wear, so as to relax that rigidity, was it not? A. Yes, sir.

Q. That was what this had over the Robinson patent? A. Yes, sir.

Q. You considered that so important you took out a patent on it? A. Absolutely.

Q. Will you look at the Butler patent No. 493,421, which you discussed—

The Court: In mentioning the side rake tooth?

Mr. Richey: No, I think—maybe that, too, Your Honor—but I think he first discussed it in connection with the first Downie patent. I believe a view of the bucket is shown in it.

The Court: It is your chart 59.

Mr. Richey: Yes, you can get that chart out, if you like.

The Witness: I have it here; 493,421.

Q. Your association with this excavating industry has been quite extensive, has it not? A. As I stated.

(Narrative continued.) I do not know whether or not the bucket of this Butler Patent was ever used com-

mercially. It speaks of a scraper, well, a scraper—originally, probably, the name probably originated in machines which were dragged along the surface by horses or tractors for grading roads and that sort of thing, which dug and skimmed the cut. This particular bucket is apparently organized for that work; also designed to be handled on a drag line machine.

Q. What are those discs, 411 out in front there for? A. I believe they are to cut.

The Court: Point it out.

The Witness: Yes, cuts in advance of the machine.

The Court: Are they in advance?

The Witness: Yes; the cutting discs to divide sod or any other material which might be in front, so that the teeth can cut it up more easily, as I understand it.

(Narrative continued.) Referring to Davy reissue patent 11,516 I am not acquainted with the commercial application of this device. As to whether it was intended to be used as a scraper with horses, my recollection does not go to any statements of a scraper. I will have to look at the specifications. At the beginning of the second paragraph of the specification it says: "My invention relates to improvement in the class of so-called scrapers. It shall be especially serviceable for sewer excavation, and which will afford a material improvement in the class referred to."

Q. Have you the same patent I have? A. Line 18, first page.

Q. What I am calling your attention to is line 8.

The Court: He wants to call your attention to something else, apparently.

Q. Take line 18. A. Yes, sir.

Q. My question is, what is a scraper? A. A drag line bucket is the nearest I can label this one; call it a scraper, scoop, drag line, bucket, dipper,—anything you want to.

Q. A scraper is a machine, that is,—a drag line is a different class of machine, as I understand it.

Q. It is one of the things used for digging ditches before the ditching machine came into use, was it not? A. I think the name went over—

Q. Answer my question, if you please. A. Repeat the question.

Q. I asked you if the drag lines and these horse-drawn scrapers were not machines used for excavating

ditches prior to the use of the ditching machines such as involved in the patent in this case? A. No, sir. I would say that a horse-drawn scraper was never used for excavating anything that would be called more than a gutter.

Q. Let us call a gutter a ditch. A. No, sir, I would not call a gutter a ditch.

Q. Limiting the question to the drag line, that was used for digging ditches prior to the use of the ditching machine such as involved in these patents in suit here; that is correct? A. A drag line was used prior to back-hoe ditchers?

Q. Yes? A. Yes. I want to qualify that. Excuse me. Just wait. I don't know the earliest dates of these dippers. I want to qualify that answer.

(Narrative continued.) As to how long these back hoes have been used, if you mean the Keystone back hoe ditcher, I know how long it has been used, but as to the other back hoes shown in these patents in suit, I don't know, the earliest date at which a back hoe was in use. I never designed back hoe machinery. I never operated them. I have seen them operate. That is my only experience. I have seen the Clutter machines operating between 1914 and 1921, that is, casually. I knew they were in quite general use but I don't know the date at all, somewhere between 1914 and 1921. Referring to Davy reissue patent the member designated with small e that runs out in front of the scraper is what we would call a plow probably. Its function is to divide the material ahead of the bucket. To state how the Davy buckets closed I would have to refer to the specifications. On line 69, page 2, it reads: "Thereafter, when the scraper is again lowered into its filling position by raising at the bottom on the ground, the dogs F will automatically re-engage." Apparently he closed that by letting it down and letting the bottom hit the ground.

Q. In that construction, most of the bucket is dropped when it is opened, is it not; that is, more than the bottom is dropped; the sides are dropped too? A. As I stated, when presenting it, the sides and the bottom are of the same structure.

The Court: It is not a drop bottom?

A. Not strictly.

Q. Will you turn to the Pugh patent 806,288, which you discussed during your direct examination. A. I have a chart on that, chart 22.

Q. Do you know if that machine was ever used commercially? A. No, sir, I don't know.

Q. That bottom is closed by snagging the teeth into the bank or some other place, is it not? If you look at line 45, page 5, I think it will help you if you have not read the patent. A. What page?

Q. Page 5, sir. A. What line?

Q. Beginning 45. A. Yes. This shoulder is adapted to engage a spring-controlled lever-detent n pivoted on the rear end of the bucket, so that as the teeth on the front end of the bucket engage in the bank, and the pressure thereon causes the bottom of the bucket to close, said lip or shoulder is engaged by the detent n-10.

Q. That is what is known as a snag closure, is it not? A. That term is not familiar to me.

Q. In the Pugh patent, there are at least four power-controlled members controlling the bucket in its cycle, are there not? A. I find a line raising the line end 17, which is the digging line, or which operates the digging line; a line for raising the boom.

Q. What is the number? A. I cannot see it here. You can say it is reeved through the block 28 near the point of the boom; and then there is a line which seems to be M, which lifts the bucket; and there is a thrusting gear on the dipper stick.

Q. And then there is a line N-15 too, is there not, that runs along parallel to the bank? A. That is the same line as N-17, in effect.

Q. Then your answer to my question would be yes, there are at least 12 power members? A. Acting on the scoop?

Q. Yes. A. Yes, sir.

Q. You were asked to read some of these claims on some of these structures. Does claim 9 of the first Downie patent, 1,511,114 read on this Pugh patent, 806,-288, in your opinion, in the same manner in which you read it on these other constructions during your direct examination?

The Court: Somebody had better read it to him and see if he can find the corresponding elements.

Q. You have not tried it before? A. No, sir, I don't think I have. Want me to go ahead with it?

Q. Yes.

The Witness: In an excavating machine the combination of a tiltable boom,—2 in red; a ditcher stick

pivoted at one end to the outer end of the boom,—that does not seem to read; I say it does not read on that claim.

Q. Will you answer the same question with respect to claim 10? A. An excavating machine with a combination of a tiltable boom,—2; a ditcher stick,—shown in orange; means for pivoting the outer end of the boom to the ditcher stick at a point below the upper end of the stick—I would say that claim does not read.

Q. The same question with respect to claim 11? A. That claim does not read.

Q. The same question with respect to claim 12? A. The same answer.

Q. The same question with respect to claim 13? A. The same answer.

(Narrative continued.) Referring to Pugh patent 1,316,058, I do not know whether that was ever used commercially or not. As to whether it is a drag line with a snag closure, I don't remember what the specification shows; the construction of the bucket, I would say, is intended to close by dropping it on the ground,—if you can call that a snag closure. On Figure 1 with a member 16, is a line not a stick.

Referring to Pugh patent 1,339,606, I do not know whether or not that machine was ever used commercially or not. As to whether that is a drag line with a snag closure or closed by dropping the bottom on the ground, as a matter of fact a bucket of that type can be snapped shut. I don't know how it was intended to be closed.

Q. Look at the Wagner patent, 1,225,537. Do you know if that machine was ever used commercially? A. To what features do you refer?

Q. Was that bucket— A. The scoop and boom construction?

Q. I think you talked about the bucket; was that kind of bucket ever used commercially? A. Yes, sir, that is a typical skimmer scoop.

Q. That particular type of bucket shown in there you know was used commercially? A. What do you mean?

Q. The one shown in the drawing; that is the one you talked about in your direct examination, as I remember. A. On direct examination I talked about the form of the drop bottom and the attachment of the teeth to the bucket.

Q. I am asking you if that kind of bucket shown in that Wagner patent, with all its accessories, bottom and so forth, was ever used commercially to your knowledge? A. To the best of my knowledge it has been.

Q. Did you ever see one in use like that? A. To the best of my knowledge, I have; but I cannot be positive of the exact details you refer to.

Q. As a matter of fact, you do not know of your own knowledge whether that particular bucket shown in that patent was ever used commercially? A. As distinguished from other scoops of practically the same construction, I cannot say positively.

(Narrative continued.) Referring to Clutter patent 1,107,899 I am quite certain I have seen it. I am trying to give my own knowledge. I would say I have seen those buckets in operation. I will not say they were just like that. I never saw a bucket just like this; never saw a bucket with slender teeth 43 like that, which would break off as soon as it gets in a bank. Referring to the three men George A. Morison, W. W. Bager, Otto F. Kaeser, names of the inventors in the Morison patent, two of these men were working under me at the time this scoop was designed; one was a secretary of the company. I would say that two of them were very capable designers; and the other one would not claim to be exactly a designer. I will say that they invented the scoop and I designed it. When in my direct examination I stated that I designed it, I meant I supervised the design of the scoop after the outlines, as shown in the invention, were provided, and laid it out. I was cognizant of the entire development. I said there was only one of these scoops made according to this patent. It was made for an outward arc machine. I think I stated on direct examination the purpose for which it was designed. The purpose of this design of scoop was to equip the outward arc machine with a bucket which would dump either in the usually high position, or would deliver its load in a car placed on the pit floor.

Q. You have discussed the scoop of the Butler patent, that of the Davy patent, that of each of the three Pugh patents, that of the Wagner patent, that of the Clutter patent, and that of the Morison patent; which of those scoops do you think comes nearest like the scoop employed in the patents in suit in this case?

Mr. Richey: Have you the blue prints and photographs of the big scoop he testified about?

Mr. Corbett: The Bucyrus scoop?

Mr. Richey: Yes.

Mr. Corbett: I have not.

Mr. Richey: You do not know where they are, do you?

(The witness refers to a chart.)

The Witness: Will you give me those numbers again, please? I would like to glance at these drawings.

Q. All of the patents you discussed,—Butler. A. What number?

Q. 493,421; Davy reissue, 11,516; Pugh, 806,288; Pugh 1,316,058; Pugh 1,339,606; Wagner, 1,225,537; Clutter, 1,107,899; and the Morison, 1,249,805. I understood those were all the patents you discussed in connection with the first Downie patent.

Mr. Corbett: Let me make a list of those patents, Mr. Richey.

Mr. Richey: Yes, I will.

(Counsel lists patents.)

The Witness: Is that question intended to include all of the scoops and buckets I discussed, or for all the patents?

Q. I think it was the patent you discussed. A. Does it include the Bucyrus scoop?

Q. That was not a patent; I was taking up the patents. A. Referring to patents. I would like to ask you for a qualification of that question. You mean appearance or function or both? What does "like" mean?

Q. It means with respect to its ability to perform functions that operate as do the scoops of the patents in suit. A. Both as to form and ability to dig?

Q. Well, operations and functions, I said; in other words we have talked about a lot of patents here and I think we can limit the court's inquiry to what are the best ones.

The Court: What you are trying to get are the patents in the prior art which are nearest to this controversy.

Mr. Richey: That is right, Your Honor,—in his view.

The Witness: I want to qualify the answer. As to form and appearance, the Clutter, 1,107,899, and Wagner, 1,225,537, are substantially the same in form and most nearly resemble the Downie bucket; while in dig-

ging qualities and ability to do the work, the Morison patent is better than either one of them; and the Bucyrus, if I can bring that in.

The Court: Morison is better?

The Witness: In the ability to dig and do the work, Morison is better than either one of them; and the Bucyrus modification is the best.

(Narrative continued.) By Bucyrus I mean the one shown in blue print Exhibit No. 7. If I had the pick of the scoops to be used on ditching machines such as are covered by the patents employed by the defendant I would pick that shown in Exhibit No. 70 and make the necessary modifications to make it clear itself.

The Court: What is the number of the patent?

Mr. Richey: It is not a patent; it is the Bucyrus scoop.

(Narrative continued.) There were only two of the Bucyrus scoops made. That is all I know of; I am quite sure there were only two made. They were for an outward arc machine.

Q. That is Exhibit 70, and shown in photographs Exhibits 71 and 72. In this photograph 71, this car shown here is an ordinary, standard railroad gondola car, is it not; and that track is a standard railroad track? A. A standard track, but I cannot identify the car. I think it is—

Q. Here is a glass.

(Counsel hands witness magnifying glass.)

A. It is the car body of either a wrecking crane, or some digging machine.

Q. But it is the regular size railroad equipment? A. It is the standard gauge.

Mr. Richey: Yes, that is what I mean.

The Court: What is the number of the Morison patent he refers to?

Mr. Corbett: 1,249,805.

The Court: Was that in the Cleveland suit?

Mr. Corbett: That was in the Cleveland suit, Your Honor. We have offered some contradictory testimony about the Cleveland situation.

(Narrative continued.) To adapt the Bucyrus scoop shown in Exhibit No. 70 for the ditching machines such as are involved in the patents in suit, the principal

change would be changing the angle of attachment of the dipper stick to get the proper lead for digging, and to change the design of these outer teeth which are not attached to the door so that they could cut ample clearance to pass the bail in the ditch. No other changes that I think of now. You could make a different kind of side teeth. Those, as far as I would think, would make the bucket dig a trench; that is what you are aiming the question at. The general utility of that bucket is outward digging, and it does not need side clearance. If it goes into a trench, it must absolutely have side clearance, and I would put teeth in it to do it.

Q. You have produced chart 64. Will you get that up so that we can look at it?

Mr. Richey: That is Exhibit No. 73.

Q. Referring to the view in the lower part, the one under the Bernard Clutter device, you have a spring in there at the top of the latch. Is that a compression spring or a tension spring, marked large C? A. C?

Q. Yes. A. That is a compression spring.

Q. That spring would make the latch an automatically closable latch, would it not? A. Yes, sir.

Q. If the spring was not there, it would not close automatically, would it? A. No, sir, not in that position.

Q. Would it, in any position? A. It would, if carefully held up here; as I understand the meaning of your question, no, it would not.

Q. When you say up here, you presume the weight of the lower end would have to be greater than the upper end? A. Yes, sir.

Q. That would be a gravity closure? A. Yes, sir.

Q. That would be a rather unsafe thing to rely upon? A. Yes, sir. In other words, a spring is necessary.

Q. What is the function of rope 9? A. To trip the load and dump the bucket.

Q. I now show you Defendant's Exhibit No. 26, the present-day recollection sketch of some of the witnesses who testified regarding this Joplin machine. Do you find any spring or rope on either one of the holes in the latch you have shown on this chart 64, Exhibit No. 73? A. What do you mean, these two? (Indicating.)

Q. Yes. A. I do not.

Q. You put those on there yourself, did you? A. I did not personally make this sketch.

Q. You do not know what the authority was for putting those things on there, do you? A. No, sir, except it was common practice.

(Narrative continued.) I do not know whether Keith patent 1,315,512 was ever used commercially or not. That patent shows a three line control machine, that is three power lines. Referring now to Hoar patent 1,322,570, I do not know except on hearsay that the machine of that patent was ever used commercially and I presume you do not want hearsay. It is an outward arc machine. Looking at the American Railroad machine the chart with the picture on top, that is an outward arc machine too. The function of the stop out there at the end of the boom I presume that that is to ensure pushing the load out of the bucket in case it sticks; but I do not want to testify absolutely.

The Court: Does the patent indicate what the inventor thought it was for?

Mr. Richey: I think some of the views in the catalog do, Your Honor.

Q. Now of all these patents you have discussed, prior art patents and machines, which would you think is the nearest like the machine of the first Downie patent with respect to operating like that machine and performing its functions?

The Witness: Which ones have I discussed?

Mr. Richey: I think you have a list of them there.

Mr. Corbett: Machines in this question as well as patents?

Mr. Richey: Yes. That includes what you call the Bernard Clutter machine.

The Witness: It includes the Bernard Clutter development?

Mr. Richey: We call it the Bernard Clutter machine, yes.

The Witness: The Bernard Clutter machine is nearest the first Downie patent.

Q. What would be your second choice?

The Witness: Should I discuss Bishop, 1,511,114?

Mr. Richey: Have you not got a list of the ones he discussed, Mr. Mahoney?

Mr. Mahoney: No, we have no list of them.

Q. 15 what? A. 1,511,114.

Mr. Corbett: I do not believe he discussed that Bishop.

Mr. Richey: I have limited it to those you have discussed on the theory that you picked out the best ones to discuss.

Mr. Corbett: Did you have a group of patents you used against that first Downie patent?

The Witness: I did not group them; I indexed them and took them from the index.

Mr. Mahoney: You had better give him a list.

The Witness: There is Robinson, 1,281,379 in connection with Q on chart 33. Is that in the record?

Mr. Richey: You ought to know which ones you discussed; the record shows.

The Court: If he discussed that one, it is likely to be marked as an exhibit.

Mr. Richey: I think so. I have a list of them here.

Mr. Corbett: You had better give him a list.

The Witness: It just happens that I did not make a list of them.

Mr. Richey: I do not want to have to do your clerical work. I gave you a list of Butler, Davy, the three Pugh patents, the Wagner and the Clutter; we have been over those. I asked him about the Keith and Hoar patents; he knows about that. And the alleged Bernard Clutter machine; and he discussed King, 589,565; Howard, 674,417; Boehm, 999,953; Coffey, 745,329; the Robinson, 1,047,991; the Morison patent, I gave you the number of that one; Olson, 826,051; I think that is all—no—Hemme, 1,233,574. That is all we have a record of. I do not think I missed any.

Mr. Corbett: The question is all right; but I think Your Honor ought to understand that they are limited to patents discussed by this expert. Some of them we are going to point out in the argument.

The Court: He is just trying to get this witness' notion of the situation.

Mr. Richey: I think it is pretty fair to assume that the experts discussed the pick.

The Witness: My trouble merely is that I cannot visualize a half a dozen things at once. I did not anticipate this.

Mr. Richey: Maybe you can answer that question after lunch.

The Witness: I could. If that answer is of any importance I prefer to answer it then.

Mr. Richey: Go ahead and answer it now. It will not take you long.

The Court: I will get a drink of water while you are at it.

(Question read.)

The Witness: My second choice would be the Bucyrus bucket on the Clutter machine, in place of the skimmer scoop.

Q. Take any one machine, not build them up; consider the entire disclosure of any of these prior patents you have discussed here. Which would be your second choice? A. I would say I have not discussed any machines near enough to the functions to make that question show what I think. I want an instroke hoe with a drop bottom, a two-line control. I don't think there is any close enough to make a real comparison.

(Narrative continued.) I looked over all the patents or substantially all the patents set up in the answer here and so far as I would know I would say that the ones I have discussed here I consider the most pertinent to the issues of this case. Referring to King patent 589,565, I do not know whether that machine was used commercially. It is an outward arc machine. If you wanted to take the bucket off and change the bucket you would apparently have to take off sixteen bolts.

Referring to the Howard patent 674,417, I do not know whether that was ever used commercially. It is an outward arc machine, I think. I do not know if Boehm patent 999,953 was ever used commercially. I don't know whether Coffey patent 745,329 was ever used commercially, that is licensed under that patent; but dipper sticks built according to Figure 3 have frequently been used commercially. That is an outward arc machine too and as far as I have seen them used they were on an outward arc machine. I do not know the International Contracting Company to whom this patent is assigned. As to Robinson patent 1,047,991, I know that was used commercially by its having been described in the publications of the Engineering societies in articles written by the author. I do not know this of my own knowledge, I never saw the dipper stick. This is an outward arc machine. You say that lots of times they describe these machines in the journals when they are not used, but this article stated where it was used, how it was used, and on what

trench. In the transactions of the engineers they are always used as stated.

Q. You still do not answer my question; you qualify it by reading into your answer what this jo[illegible]l said. I am trying to get at your own opinion of th[illegible]e things. You do know as a matter of fact frequently these journals do illustrate and describe devices that were not used commercially, do you not? A. Yes, sir.

(Narrative continued.) Referring to Olson patent 826,051, I do not know whether that machine was ever used commercially. This machine only uses two power lines during the digging function. The function of the line 14 is to set the boom at different angles as I remember it. Having set the machine at a particular angle, it slides up and down through the collar, I think they call it, 22. The member 14 sets the boom 13 at a definite angle. Looking at Figure 2 and Figure 1, the pivoted part of the bucket is at the end, opposite to the cutting end. That is the part back of the mouth, in other words. The Thew machine which I have discussed here is an outward arc machine. I was present at the tests of both the plaintiff's and defendant's machines. Both of them operated during the digging operation by a two-line control, independently of the swinging and when they dump by inversion they are operated by two lines.

Q. And when they dumped through the bottom, they had a hand-controlled device that was only operated when the bottom was stripped; that is right, is it not; this third line you speak of, the only time they operated that was when they tripped the bottom?

Mr. Corbett: Read the question.

The Court: It is very clear.

The Witness: The third line on the—

The Court: They used a separate line when they wanted to use the drop bottom?

A. Yes, sir, the line wound up by the electric motor.

Q. And the only time they operated that was to trip the bottom after positioning the scoop where they wanted to dump? A. Yes, sir.

The Court: That was true on both devices, was it not?

Mr. Richey: Yes, Your Honor, true on both devices.

(Narrative continued.) Insofar as the dumping and digging are concerned it would matter whether the scoop

was closed at the top or not. That is the top limits the load put on the scoop and the load in the scoop may also stick to the top. It makes a difference in dumping. Putting on the top makes the scoop a good deal stronger. I have named all the distinctions between the scoop with the open top and the open bottom as used on these attachments of the plaintiff and the defendant that occur to me now.

The Court: There was some talk that they do not need a bail.

Mr. Richey: Yes. I was going to ask him about that.

The Court: All right.

Q. The function of the bail is to form a connector between the scoop proper and the ditcher stick? A. Across the open top of the scoop; it is like a handle.

Q. It does not make any difference in the operation of the machine whether that bail—the parallel or horizontal part of that bail is close to the sides of the bucket or removed a little bit away from them. A. Except, if it is on the bucket, it is not a bail.

Q. According to your definition of a bail, it would not be a bail, but, functionally, it is the same, is it not? A. No, sir, it is not functionally the same.

Q. Will you state the differences in the functions of the two? A. Because of the bail across the open top, the load cannot crowd out around the side of the bail.

Q. We are talking about bails, not whether it is closed or not. A. You cannot separate the two; at least I don't know how to.

Q. So that the only difference would be the lower down the bail to the edge of the bucket, the better it confines the load to the bucket? A. The bail does not confine the load to the bucket; the bail lets it out.

Q. What are the functions of this thing I am calling the bail; that is, the part that goes over the top like the handle to a basket, through which the dipper stick is connected to the bucket? A. To transfer the load of the member which is carrying that handle by the middle to the two ends.

Q. And both in the plaintiff's and defendant's machines, that is the function that is performed by these members? A. The bail of the open bucket machine, and the stiffening girder across the top of the closed bucket machine, both perform the function of carrying the load of the ditcher stick over the sides of the ditcher or scoop.

Q. In addition to that, you think that the member in the defendant's devices helps to stiffen the bucket? A. Certainly it does.

Q. That would be another function? A. The prime function.

Q. To a certain extent plaintiff's bail would help to stiffen the bucket? A. No, sir.

Q. You think it would not help to stiffen the bucket at all? A. The sides would be a little harder to crowd out because of the bail. It would help to stiffen the sides of the bucket.

Q. The performance of that function by these two devices is different in degree due to the fact that one is closer to the sides of the bucket than the other? A. In the closed type of bucket, the sides are fully tied together by the top plate itself, and by the angle connections between the top and side plates.

Q. They do not need any assistance from the bail to tie them together? A. They do not use that assistance. The plate does it. The girder across the top, in combination with the plate, makes a carrying member which transfers the strain to the ditcher stick up and down across to the side plates of the bucket.

Q. It seems to me we have come to the point where we are agreed that what you call the bail in plaintiff's machine, and what you call the girder in defendant's machine, both help to bind the sides of the bucket together. I will ask you if the difference in the binding effect is not a matter of degree? Now can you answer that for me? A. I understand this binding effect, to which you allude, to be laterally stiffening the sides of the bucket; and I answer that the bail has no appreciable effect toward laterally binding or stiffening the sides of the bucket, when there is a solid top plate rigidly riveted through the entire length of each side of the bucket embodied in the structure.

Q. Now you say in the defendant's constructions that this girder does not help to bind the sides together because the top does that? A. The top amply does that, yes.

Q. So that the only function of this girder, then, in the defendant's constructions would be to transmit the forces and strains and so on from the stick to the bucket? A. Yes, sir.

Q. And you think in the plaintiff's device, in addition to that function, the bail helps to bind the sides to-

gether? A. Yes, sir, because the bail is the entire connection in that bucket.

Q. I believe you said that in the defendant's constructions, the stick was not connected to the bucket at a point in the rear of the open mouth of the bucket, is that correct? A. Yes, sir, I said it was connected flush with the open mouth of the bucket.

Q. That is, you mean that the edge of the bail or girder is flush with the open mouth of the bucket. A. Yes, sir.

Q. But the connection of the stick to the bail is back of the front edge of it, is it not? A. The connection of the stick to the bucket is as wide as the stick, and the stick is located beginning at the front end of the bucket, because it cannot get any farther forward without running off the bucket.

Q. That is because you say the front end of the stick might be flush with the mouth of the bucket, the stick would not be connected in the rear of the mouth, although the rest of the connection of the stick was in the rear of the mouth? A. Yes, sir, I would say so from any reasonable interpretation. When the stick is connected to the bucket as far toward the mouth as you can get it, without running off into the air, it is connected to the mouth of the bucket.

Q. Would that make any difference in the performance of the functions and operations of these machines, that is, the fact that the front point of the connection of one was flush with the mouth of the bucket, and, in the other, that point was back of the mouth of the bucket? A. By properly modifying the angle between the stick and the bucket, which we are calling the lead angle, either location can be made effective.

Q. In either event if you adjusted it as you mentioned? A. It can be designed.

Q. The operations and functions would be the same? A. Practically the same.

Q. That is, you do not consider that that is any material difference, that little difference in the position of the connection? A. I think equivalent functions can be gotten in either location.

(Narrative continued.) The word "swing" has a meaning peculiar to this industry. I said that the general understanding of the word "swing" originated with one handed shovels, to the best of my knowledge, where the boom is attached to one end of the machine and can-

not swing more than ninety degrees to each side of the center until it strikes the A frame, and some associations of that word "swing" with the reciprocating back and forth motion. I am not prepared to say that the term is not used to express the motion both with the three hundred and sixty degree and the one hundred and eighty degree machines in the patents which have been set up in the answer, because I have not examined it carefully with that in view. I merely say that if anybody said "swing" to me, without any context, I would understand a reciprocating swing rather than a revolving motion. I am also not prepared to say that all people in the industry look upon it in the same way.

Q. Taking up again the combination of machines to meet the first Downie patent as distinguished from the individual machine which we discussed this morning, would you say that the combination of the machine of the Hudson patent and the Pugh patent as illustrated in this Chart 33 that you produced here are the best combination of references to meet the first Downie patent that you know of? A. Well, we already spoke of one—

Q. Well, I mean aside from those? A. Aside from the ones I have mentioned?

Q. Yes. A. Well, at the present, I don't think of any better. I can not remember everything I have seen, but I would say, if that bucket is turned around, rigidly mounted on that stick, it makes a reference very closely.

Q. And that is the only combination that you know of, except these you mentioned this morning? A. The best one that now occurs to me.

Q. I would like it to appear—I understand that this chart 101 is for illustrative purposes—that this channel 7d is on the wrong side of the stick, isn't it? A. It should be toward the mouth of the dipper.

Q. Yes, it is on the wrong side. A. Yes, sir.

Q. You didn't mean this Exhibit 101 as accurate, did you? A. Well, I meant it to be accurate in that sense, so far as that is concerned.

Q. Well, for illustrative purposes? A. It is not an absolutely scale drawing, but I have intended to correctly show the construction of that shovel, and that is accidentally shown on the wrong side.

Q. And the same thing—Chart 102, Exhibit 81, that also appears for illustrative purposes, rather than to be accurate to scale? A. It is not accurate to scale, sir; just approximate.

Mr. Richey: That is all.

RE-DIRECT EXAMINATION by Mr. Corbett.

I left the Bucyrus Company approximately the end of the year 1921. Prior to the year 1921 I saw the door on steam shovels close many times by snapping it shut or by momentum closure. It is ordinary practice. I should say in this type of digging shovel, large revolving shovels working in a ditch, they close the door at least half the time by stopping half way down and snapping it shut and going up again. This closure is a snapping or inertia closing. Not gravity at all, or only partially gravity. I might say that the doors or drop bottoms on shovels for outward dippers, used on outward arc shovels, are generally suspended at a point which makes them close by gravity quite a long distance before the ditcher stick reaches the vertical position. The patent to Robinson illustrates that, although not so well as some others. I refer to Robinson 650,991. Referring to the Exhibit it will be noted that the bottom door is pivoted a long distance up the back, rear side of the dipper; that is to say, the side opposite the side to which the teeth are attached, and that the effect of that is that the center of gravity of the door is so located that the door will close or slam shut long before the dipper stick is brought back to the vertical position; so that open gravity closure occurs when the stick is perhaps thirty feet off the ground and by a little bit of snap you can close it anywhere by the travel very easily.

Q. Now, you spoke of the purposes for which you designed the bucket of the Morrison patent number 1,249,805, and stated that one winning purpose of this bucket was to provide a ready means for dumping into a pit; is that correct? A. No, I don't think that the word "pit" was understood. We speak of the "Pit" as the floor of the excavation, in which the outward arc shovel is standing on the floor of the pit, meaning what is the floor of the material that has been dug away, and when we say, dropping into the pit, that means the shovel dropping on the floor, or the pit man is the man that stands on that floor.

Q. What I want to know is the position in which the stick in this Morrison device was expected to be when you effected this dumping action. A. Well, referring to the chart, the position of the stick would range anywhere from the horizontal ditcher stick position down to the vertical.

Q. You were trying to get a device that would not only dump in a horizontal position, but also would dump when the stick was vertical; is that right? A. Yes. The stick would ordinarily be dumped before it could reach down to the vertical. That is the reason I wanted to find this chart. The bottom of the scoop would be horizontal in the lower dumping position. That is, on the Bucyrus scoop.

Q. Is this the chart that you are looking for? A. Yes, that will do very well. Now, I don't want to be misunderstood on the more or less vertical position of the stick. As mounted on the outward arc shovel, the bottom of the door comes to a horizontal position before the stick has quite dropped down on the vertical. So I prefer the machine or dumping bottom of the door which will dump equally well anywhere from a position where the stick is about horizontal and the dumping bottom of the door is nearly vertical, down to a point where the dumping bottom is fully horizontal.

Q. You were requested to state what changes would have to be made in that Bucyrus bucket shown or illustrated roughly in Chart 100 in order to make it applicable to an instroke machine. I think the question was limited to the digging of trenches. However, was this instroke machine limited to the digging of trenches? A. No, they are frequently used for digging cellars as was done at Joplin.

Q. You suggested that it would be necessary to use side rake teeth to adapt this machine to an instroke machine for the digging of trenches, as I understood. Would that be necessary in the digging of cellars? A. No, you could dig a cellar with the teeth just as shown on the bucket. There would possibly be a little failure to get entirely plumb on the side bank, as there might be a slight interference here. That would be fully removed by putting on teeth there that stick out about an inch further. The large part of a cellar, just scooping it from all directions, this bucket is perfectly adapted as it is.

Q. The Clutter patent indicates that it related to a device for excavating cellars or trenches and in deepening and widening water courses. Would you say that side rake teeth would be necessary in the deepening and widening of water courses? A. No.

Q. How many claims of the Downie patent 1,511,114 involve the feature of side rake teeth. I am speaking about the claims 6 to 9, which are the claims involved in this suit. A. 6 to 9?

Q. 6 to 14, inclusive, which are the ones involved in this suit.

The Court: First Downie patent?

Mr. Corbett: Yes, Your Honor.

A. Patent 1,511,114. Only one claim refers to side rake teeth, claim 14.

Q. In the Bucyrus scoop did any of the teeth serve to protect the pivot on the bottom to any extent? A. Yes, to a considerable extent.

Q. Please designate those teeth on the chart 100. A. By a mark?

Q. By a mark, if necessary. A. (Witness marks on chart.) The teeth 6 projecting at any angle from the two corners of the drop bottom come very closely to the same width across from tooth to tooth with the pair of 6 as the distance across the pivot, but with the length of teeth actually shown and built in the first Downie which was used for the outward arc shovel, that complete protection would refer to comparatively shallow cuts, where the dirt more or less falls away. If you were digging in a trench where the sides stand perfectly parallel, there would be some interference with that tooth shown as cut off.

(Narrative continued.) This chart is designed to show the combination resulting from taking the Bishop structure or patent 1,511,114, the result of combining that with the Bucyrus bucket, in place of the rigid and dumping bucket shown in the patent. I don't know what purpose Downie had in making his bucket open at the top. I can see the purposes that might be accomplished by it. In the first place, it is lighter, takes less metal to make it, and is cheaper to make. In the matter of enclosure of the dirt the Downie bucket only encloses the dirt on three sides, whereas the defendant's bucket enclosed it on five sides. The defendant's bucket is more of a flare type of bucket—I cannot—I am not accurately able to answer that. I might say further, in regard to the effect of having a fully enclosed bucket—there has been a good deal said about the adherence of material in dumping sticky material to the sides of the bucket. It would be quite plausible to leave the top off the bucket so the material would not adhere to it, and it would go out more easily. That might be another purpose of having the open top.

I have read the deposition of Bernard Clutter and the several corroborative depositions taken in connection with the Bernard Clutter development.

Q. I refer you to Defendant's Exhibit No. 26, and ask you if these depositions disclose that the structure used by Bernard Clutter contained any other features than the features shown in this blue print?

Mr. Richey: Well, I object to that. He is interpreting or trying to interpret the depositions themselves to what the reference says. Somebody said that this was the machine, and someone vacillated a little bit, and some of them said it was essentially the same thing. Now, how can this man come along and take their testimony and interpret it and state what they meant.

Mr. Corbett: This is to illustrate to the Court what the device was.

Mr. Richey: No, explain the machine, not the testimony.

The Court: What is the purpose of this testimony?

Mr. Corbett: Well, it was left in the air as to whether or not there was a spring on that latch, in the cross examination. I just want to clear that up, Your Honor.

Mr. Richey: The Joplin witnesses were handed that drawing and asked, is this the machine. Now, it was up to them to say whether it was or not, and not for this witness to say what they did say.

The Court: Unless he seen the machine—have you ever seen this machine?

The Witness: I never saw the machine, no. The depositions take a certain scoop as a substitute.

Mr. Richey: Now, wait a minute; let the Court rule upon it.

The Court: If these depositions say that there was a spring there in addition, all he has to do is to point that out, it seems to me.

Mr. Corbett: All right; we will point that out.

Q. In the plaintiff's bucket with the open top and with the bail there is a chance, is there not, that root and similar things might hang on that bail in dumping? A. Yes, that is correct.

Mr. Corbett: That is all, Your Honor.

The Court: Anything further, Mr. Richey?

Re-Cross Examination by Mr. Richey.

Q. This chart 100 which you have discussed—what is the Bishop, the number of the Bishop patent you refer to on that. Didn't you mean the Hudson patent?

Mr. Corbett: He means the Hudson.

Mr. Richey: Yes, that is what I thought.

The Court: You mean the word up there? (Referring to chart 100.)

Mr. Richey: Should be Hudson. That is right, isn't it? Look at the Hudson patent and see if that is not right.

Mr. Corbett: Yes, that is what it should be.

The Witness: It appears to be Hudson 1,281,379.

Mr. Richey: Well, if you'll put that in evidence, that will change it. That is all I have.

Mr. Corbett: I would like to have it there clearly that the patent referred to is the Hudson patent, number 1,281,379, which is shown on chart 100. The word "Bishop" was in error.

Mr. Richey: I have one more question.

Q. You said something about a snapping closure of the back of these buckets on the forward arc machines. Do you consider that one shown in the Robinson patent, 659,991, typical of the type of bucket that is used for that purpose? A. It is. Yes, I would say typical. There are other designs, many of them, in which the pivot is carried further forward toward the tooth side of the bucket, which makes it close still sooner. The location of the pivot is a matter of design, and it is practically always located so as to close before the dipper stick gets down.

Q. Of all the forward arc buckets you have discussed here, you consider that one shown in the Robinson patent best available for closing the back by snapping it? A. I don't know whether I could find one which appeals to me more.

Q. Well, pick out the best one, will you—the one you consider the most suitable for that purpose. A. Well, the Robinson will do. I will let it go at that. The other two that I find have the teething in no better location.

Mr. Richey: That is all.

Mr. Mahoney: We wish to offer this chart 100 in evidence as Defendant's Exhibit number 92.

Mr. Williams: We now offer in evidence the second deposition of BERNARD R. CLUTTER, taken October 21, 1930.

Mr. May: We should like to have the purpose stated in connection with this offer.

Mr. Williams: In this deposition there is some evidence upon the structure of the scoop used, a page or two on that, and the rest of it goes mainly to the development by Clutter at Joplin, Missouri, and the arrangements that were made between Clutter and the plaintiff here, through R. R. Downie, as we claim, for the suppression of the evidence on that development at Joplin.

Those are the contents, and the various purposes for which it may be heard, goes to the weight of Downie's testimony, goes to the question of the probability of the development by Clutter as testified to by other witnesses and also goes to the question of the equitable propriety of the bringing of this dispute, in view of the attempted suppression of this evidence.

Mr. May: As to all purposes but the last, we have no objection to its admission, and will not object. But as to the last, we feel that the practices of a court of equity will not allow that construction to be put on this kind of evidence. We can cite some cases.

The Court: Well now, what is the one that you object to?

Mr. May: It is the last, that it may be used on coming in with unclean hands, as it is stated, to support that. On that we can cite the Court some principles.

The Court: All right, I will hear you. Is there anything else on that same issue, Mr. Williams?

Mr. Williams: There is also a stack of papers, various papers and correspondence, which were brought into the court by the plaintiff in response to a motion to produce, and we will ask the introduction of a number of those papers that were not identified in this deposition. This deposition identifies, and carries with it, I think, three of the letters, and on cross examination a number of others were marked for identification but not introduced by the plaintiff, the deposition having been taken by the defendant. Then there are some papers in addition to those mentioned in the deposition itself which, as I say, have been produced here in response to a motion, which we will offer in evidence.

The Court: All right.

Mr. May: As far as what is to be offered is concerned, I think we will not have much trouble. As to the effect of the giving of the testimony that is offered, that is the only question that I wished to raise with the Court.

The Court: Your objection to the testimony is to the effect of it after it is in?

Mr. May: The effect of it after it is in.

The Court: Well, then it is admissible, on your own statement of it.

Mr. May: No; testimony can be admissible for one purpose and not for another.

The Court: Well, of course, that is so, but your objection is to what the Court shall do with the testimony after it comes in, so that, by the form of the objection, admits the admissibility of it.

Mr. May: I can put my objection in another form. I object to the testimony, then, for the purpose of tending to prove anything as to unclean hands in the coming into this court.

The Court: All right, I will hear you on that.

Mr. May: As I understand the principles as applied by the Court, where it is a question involving fraud or suppression of fabricated testimony, it is applied only as to the weight to be given to that testimony. In other words, if a case can be proven by the person seeking redress by testimony in spite of what may have been suppressed, or by testimony other than may have been fabricated, the policy of the law still is to allow him to recover. And that is shown, I think, in two cases which I can cite, one is in 280 Fed. 895, *Armstrong vs. Pauling Brothers Company*, which is a case in equity for an accounting for profits. An order had been made upon the company to produce certain records. Instead of producing these records, the party destroyed them, and the Court, in its opinion, says, where the defendant on an accounting for profits refuses to produce its records in compliance with the orders of the Master and the Court and destroys records which might contain material evidence, the other party is entitled to introduce the best evidence available, and even though it is imperfect, vague and uncertain, the presumption ought to be made as against the defendant.

The Court: It will be presumed that the documents were damaging to the party that destroyed them.

Mr. May: Exactly. We have no objection to this testimony, if that is the purpose of it.

Another case is *Barnes vs. Barnes*, 282 Illinois, 597, also 4 *A. L. R.*, p. 4, on p. 8.

He who comes into a court of equity must come with clean hands, and one who does iniquity cannot have

equity; but that maxim is limited in its application to where the substance of the thing is inequitable, and the iniquity must apply to the particular subject matter. It is not sufficient to bar relief that the inequitable conduct should be laid to the proof of some item or fact and where the origin of the claim is not inequitable.

Now, that is the principle we stand on here. The origin of our claim is not inequitable. (Continues reading from opinion in case last cited.)

Now, I have a citation from *Chamberlain on Modern Evidence*, edition of 1911, volume 1, section 478, which is found on page 614. (Reads)

Now, in this case, we think that principle applies so far as the admission of this evidence is concerned, and then we say that the evidence is here before the Court; the Court is not being deprived of any of the facts which it is entitled to have before it. But this offer as made of this deposition and other documents, that Mr. Williams mentioned, cannot be properly admissible for the purpose of proving or showing that the plaintiff has come in with unclean hands. As I said to the Court, we do not object that they are offered for the purpose of allowing what inferences may be fully and logically drawn therefrom, just as any other inferences by conduct are allowed to be drawn.

Mr. Williams: May it please Your Honor, we are offering this evidence for all purposes, not only as a basis for inference as to the weight of testimony already in this record. We are offering it also as evidence of facts about which there is no testimony or evidence in this record at all. And it comes squarely within the authorities cited by counsel, in that the facts which we propose here to disclose go to the very basis of this claim. Our claim is that if the facts were known first when Rex Downie applied for his patent, he would not have gotten it.

The Court: That is the first Downie patent.

Mr. Williams: That is the first Downie patent. And second, that if the facts were known in the Cleveland case, he would not have had relief certainly as to that party, and my claim is as to any relief in that suit.

So that the evidence which we are here seeking to introduce is evidence of conduct which goes to the very basis of the suit, of the claim made here in this suit. It appears in one of the authorities cited that if there is a spoliation of documents, that at least there will be an

inference against the spoliator. True, we claim that inference here.

Now, he quotes a further section from *Chamberlain* to the effect that if the offending party is entitled to relief, he is not barred by inequitable conduct. Now, our claim is first that upon the full showing of these facts, the plaintiff is not entitled to relief, and second that if those facts when detailed do not absolutely bar him from relief, as we claim they do, still they may be used for all the inferences about which he speaks.

Now, it seems to me, therefore, that without citation of authorities, though I have plenty of authority I can cite upon the general situation that evidence of this character will bar relief, but if it be not of such character or not of such extent, or does not go deep enough to the basis or root of the action to actually bar relief—

The Court: It is probably too collateral to this lawsuit to be a basis of unclean hands.

Mr. Williams: In this case?

The Court: Yes.

Mr. Williams: Why, no, Your Honor, it is at the very basis of it.

The Court: It is collateral in this case, and if there was any fraud perpetrated, it was on the Cleveland Court in that litigation.

Mr. Williams: Oh, no—Wait a minute. These acts were committed before that case was brought. Now it may have been that the Byers case was first in contemplation but it certainly cannot be contended that this plaintiff should sue nobody but Byers, and that no other defendant would be less affected.

The Court: My understanding is that the thing you are complaining about is that this evidence was not brought to the attention of the Cleveland Court.

Mr. Williams: Not only that, but it was suppressed so it could not get there. If they had been successful in their attempt, it would not appear there.

Mr. May: We think there is a large assumption there. There is no evidence whatever on that.

The Court: Well I think I will have to take the evidence, perhaps not on the theory that you suggest, but we will leave that open for argument.

Mr. Williams: Well, so Your Honor will not get this with a closed mind, so to speak—

The Court: Well, my mind doesn't close for a long time.

Mr. Williams: Well, at least the inclination is to set it aside from the main part. This is not a flank attack; this is a frontal attack.

The Court: That has to be considered; I have not seen the evidence, of course. We all know the rule that unclean hands cannot be alleged as mere collateral matter, and then bar relief. But the reason I think this evidence is admissible perhaps—and I will not decide that until I have considered the case—is this: that strong reliance is going to be placed upon the decision of the Court of Appeals in the Cleveland case. Now it seems to me that I have got to take any evidence which I should ponder on to determine whether or not the Cleveland Court would have come to a different conclusion than it did, if it had had that before it. Now this may be of that caliber. I do not know what place this will have in this record, but I think I ought to admit it, and then argue it later.

Mr. Williams: Well, let me make one more statement.

The Court: Well, I might rule against you after you make the statement. I am for you now.

Mr. Williams: Well, maybe I had better not talk any more.

Mr. May: There is no evidence in this case that the defendants in the Byers case had not these facts.

The Court: Well, that is so. That is up to you. I don't know whether that is in here or not. I cannot judge as to that. It seems to me that the thing to do is to let it in on any theory, and then you gentlemen may argue the effect of it later. That is all I can do.

Mr. Williams: The deposition is offered in evidence, and I will now read a part of it, and the part that I do not read will be taken as read, as I understand, for the purpose of this case.

The Court: Yes.

DEPOSITION FOR DEFENDANTS
Taken at Lakewood, New Jersey.

NOTICE OF TAKING TESTIMONY.

MR. PHILIP E. SIGGERS,
918 F Street, N. W.,
Washington, D. C.

MESSRS. RICHEY & WATTS,
1090 Union Trust Building,
Cleveland, Ohio.

Attorneys for Plaintiff:

Please take notice that the Defendant herein will take the testimony of Bernard R. Clutter, 17 Edgewood Court, Lakewood, New Jersey, who resides more than one hundred (100) miles from the place of trial herein, for use on behalf of the Defendant at the final hearing of this cause, before Helen R. Grove, a Notary Public in and for the County of Ocean, New Jersey, who is not of counsel nor interested in this cause, at the office of Helen R. Grove, 138 Ocean Avenue, Lakewood, New Jersey, on the 21st day of October, 1930, at seven o'clock P. M., and thereafter from day to day as the taking of the depositions may be adjourned; and such testimony will be taken in accordance with the provisions of Sections 863, 864 and 865 of the Revised Statutes of the United States and the Federal Equity Rules.

You are invited to attend and cross examine.

EDWIN P. CORBETT,
Attorney for Defendant.

Dated at Columbus, Ohio, this 16th day of October, 1930.

Service of a copy of the above notice of taking testimony is hereby acknowledged this 17th day of October, 1930.

RICHEY & WATTS,
Attorneys for Plaintiff.

PRINTER'S NOTE:

A like notice was issued on behalf of the General Excavator Company and was signed by Mr. Edward L. Reed.

The following deposition was taken on behalf of both defendants, pursuant to the above notice, at the office of Helen R. Grove, 138 Ocean Avenue, Lakewood, New Jersey, a Notary Public, in and for the County of Ocean, New Jersey, commencing at seven o'clock P. M. on the 21st day of October, 1930. Counsel for all parties being present.

BERNARD R. CLUTTER, a witness called by defendants, being first duly sworn, testified as follows:

DIRECT EXAMINATION by Mr. Mahoney.

My name is Bernard R. Clutter. I reside at 17 Edgewood Court, Lakewood, New Jersey. I am occupied with road construction, being superintendent of The Liddle & Pfeiffer Co., of Perth Amboy, N. J. I have been working on road construction work this year. I am just completing a seven mile, approximately, piece of road of concrete. I have full charge of this road construction work. I am 49 years of age this year. I am testifying under subpoenas in these cases. I have forgot the date, but I am the Bernard R. Clutter who testified in these cases at Lakewood, New Jersey, regarding the designing, construction and use of a rigidly attached drop bottom ditcher scoop on an instroke ditching machine for Wallower Brothers on the Joplin Supply Company job at Joplin, Missouri, in the early part of the year 1920. In my previous deposition in these cases I testified that several years prior to the time I designed and used the drop bottom ditcher scoop for Wallower Brothers at Joplin, Missouri, I had been employed by the Keystone Driller Company, plaintiff in these cases, as demonstrator of machines and salesman.

While I was employed by the Keystone Driller Company that company manufactured and sold excavators having ditching attachments, like that shown in figure 1 of the drawing of Defendants' Exhibit No. 24. These machines manufactured and sold by the Keystone Driller Company had a link member, 19, connected at one end of the ditcher stick 1 and at the point 19a, and at the other end of the supporting member 17. The Keystone Driller Company manufactured this link member 19 straight and flat for some time. This link, however, was later changed in shape to avoid an interference across the end of the boom extension straps. The point

where the link member 19 contacted with the boom extension strap is indicated on figure 1 of Defendants' Exhibit 24 with the letter "B". I have demonstrated Keystone machines having ditcher attachments like that shown in figure 1 of Defendants' Exhibit 24. This interference of part 19 with the boom extension strap affected the inner movement of the ditcher stick 1 towards the boom by causing a stoppage of the instroke of the ditcher stick when pulled up near the boom.

Q. I now hand you Defendant's Exhibit No. 34, a tracing made from Clutter patent 1,317,431, Defendant's Exhibit No. 24 and ask you if this tracing shows the manner in which link 19 contacted with the boom on the machines you demonstrated for Keystone, having straight links 19 thereon.

Mr. Edgerton: The question is objected to as leading, moreover the illustration handed the witness has not been proven as a faithful representation of the drawing to which it is alleged to refer.

Mr. Mahoney: The witness's attention is called to the fact that the tracing is enlarged twice the size of the drawing of Defendant's Exhibit 24, and modified somewhat to the extent that certain parts shown in the defendant's exhibit and not in question here have been eliminated in the tracing. A. Yes, sir.

(Narrative continued.) The part marked P 2805 on blue print of Keystone Driller Company number P 48 Defendants' Exhibit 35 is the connecting link, and the figure P 2805 on this blue print corresponds to the part 19 on Defendants' Exhibit 24.

Keystone catalogue bulletin No. 901 dated January 1917, Defendants' Exhibit 36, page 7, figure 708, shows where the connecting link 19 interferes with the extension strap at B. The figure 708 in this catalogue represents the Keystone excavator number 3. Machines like those illustrated on page 7, figure 708, Defendant's Exhibit 36 having straight links number 19 thereon, were manufactured and sold by the Keystone Driller Company to my personal knowledge prior to January, 1917, and prior to that I don't know how far back.

In my previous deposition I testified that I went to the Island of Trinidad, near the South American mainland some time in the year 1920 with a Keystone Driller Company excavator and I returned to the United States about the year 1921. After I returned to the United

States I located at Hillside, New Jersey. I have been a resident of New Jersey since returning to the United States in 1921. I have principally been engaged in road construction work since returning to the United States from Trinidad in the year 1921.

I am acquainted with Robert Rex Downie, an officer of the Keystone Driller Company, plaintiff in these cases, and became acquainted with him at Beaver Falls, Pennsylvania, approximately in the year 1914. He is generally called "Rex".

I have seen Mr. Rex Downie since I returned from Trinidad in 1921. The first occasion that I saw him after I returned to the United States in 1921 was approximately the early part of 1925. This meeting took place at my residence 17 Edgewood Court, Lakewood, New Jersey. Mr. Howard Elmire was also present at that meeting. He is one of the salesmen of the Keystone Driller Company. This visit of Mr. Downie to Lakewood to see me was a voluntary one on Mr. Downie's part. When he first came there I did not know what he came to see me about. He asked me to go on the outside of the house to talk over some private business. Mr. Elmire stayed in the house. When we went out into the yard there was no one present besides Mr. Downie and I.

Q. Relate as nearly as you can what took place when you and Mr. Downie went out into the yard of your home at Lakewood on this occasion. A. Mr. Downie informed me that he wanted to talk over some business privately and that he didn't want anyone to know anything about it except he and I. I asked him what the nature of the business was and he said it was regarding that drop bottom ditcher scoop that I had had made out at Joplin, Missouri. He explained that they, meaning the Keystone Co., I presume, or possibly he, Rex Downie, had a patent, I should have said had taken out a patent on a drop bottom ditcher scoop, and that I apparently had made or had had made the first one at Joplin, Missouri, and that I could cooperate with them in the protection of this patent. I told Rex that if I had had the first one made and put into use, that it was my invention, and not theirs, and that I could not see where they had any right to the patent. I don't remember all that was said, however after considerable jarring, over the proposition, Rex informed me that I did not have money to go into court and fight the Keystone Driller Company, which was a fact. However, he said if there had been a

wrong done, let's get together and see if we can right the wrong. I asked him in what way that could be accomplished. He said that he had a proposition to make me if I could be willing to consider it, and I asked him what it was. He said that they would sell me a new machine at half price. As this was the only opportunity that I felt that I had, to realize off of my invention, I agreed to accept it. I asked Rex if we should go into the house and draw up a contract to that effect, and he said, "No, not now." He said "Now that is the ticklish part of this thing.", That it was a question as to whether or not there could be anything drawn up in writing that would be of any advantage. He also said that any papers to show that there was a deal existing between us might serve to invalidate the patent. He said that he would find out if there was any way that they could hold me and see me later. He also told me that I would have to sign settlement in full for the machine, and that they could later issue me a credit for the half interest, and that I would have to trust entirely to his honesty to carry out their part of the deal. He asked me not to say anything to Elmire or anyone else as to what his business was down in Lakewood.

Q. In your answer to the above question, you testified that Downie said that you could cooperate with them in the protection of this patent. Did he explain to you what you were to do in this respect? A. Yes, sir.

Q. How were you to cooperate with him in the protection of the patent? A. By keeping absolutely quiet in regards to my part of the invention.

Q. And for that consideration they were to give you a half interest in a new Keystone excavator. Is that right? A. Yes, sir. That is for that consideration and also as he expressed it to right the wrong if there had been a wrong done.

Q. What was the full price of a Keystone excavator that he promised to give you a half interest in? A. Including the attachments $8200.00 and I believe it was $40.00 or $50.00 or approximately that figure.

Q. Then you were to receive the sum of approximately $4120.00 as your half interest in that machine. Is that correct? A. That is correct.

Q. In this conversation you have just testified to with Mr. Rex Downie did he explain or mention to you how he was going to protect the patent, or what the occasion was for asking you to cooperate with him in the pro-

tection of this patent? A. He said that they had either started or were going to start a suit or suits on company or companies that were infringing.

Q. In your answer to Q. 44 you said that you were to keep absolutely quiet in regard to your part of the invention. What part did that refer to? A. The scoop that I had made at Joplin, Missouri.

Q. You say you accepted Mr. Downie's proposition in this respect? A. Yes, sir.

Q. Did you order a Keystone excavator then according to this proposition? A. Verbally—the contract was not written at that time.

Q. Did the Keystone Driller Co. later ship you a machine on this verbal order or in accordance with the proposition made to you by Mr. Downie? A. My recollection is that the contract and notes were signed prior to the shipment of the machine, but the verbal agreement between Rex Downie and myself was to be carried out as part of the contract—however not in writing.

Q. Do you recall whether or not the contract and notes and chattel mortgages and other papers for the purchase of this machine were made out for the full price of the machine? A. Yes, they were.

Q. I now hand you a letter with attachments and ask you to explain what they are if you know. A. This letter is to inform me that the machine in question is shipped or was shipped on the 9th day of March, 1925, and consigned to Clutter Contracting Co. at Lanoka Harbor, N. J. This letter is from R. J. Bole, manager, New York branch, dated March 16th, 1925. The attachments are the invoice covering the machine as ordered with attachments, also bill of lading memorandum.

Q. This letter is from the Keystone Driller Co. New York office. Is that correct? A. Yes, sir.

Q. Who was the Clutter Contracting Co. to whom this letter, the bill of lading and the invoice are addressed to? A. B. R. Clutter, trading as Clutter Contracting Co.

Q. Was this Keystone excavator Model 4 invoiced to you on March 9th, 1925, the excavator that was shipped to you in accordance with the deal between you and Mr. Rex Downie at Lakewood in the early part of the year 1925, about which you have just testified, and the machine in which you were to have a one-half interest free?

Mr. Edgerton: Objected to as leading.

A. It was.

Q. Is the $8240.00 the total amount of the invoice the full price of the machine and attachments? A. Yes, sir.

Q. Did you actually receive the machine referred to in the Keystone Driller letter of March 16th, 1925, invoice dated March 9, 1925, and bill of lading receipted for by the Penna. Railroad at Beaver Falls on March 12th, 1925? A. Yes, I received the machine. I never did receive all of the attachments.

Q. Referring to the invoice dated March 9th, 1925, can you state which of the attachments listed thereon you received and which you did not receive. A. I received the five-eighth yard six roll skimmer scoop. The balance of attachments were shipped later to the Arlington shop, but I did not get them.

Q. The first item on the invoice, however, "model 4 '25 Front Crawler Mounting Gasoline Driven Keystone Traction Excavator", refers to the excavator proper, and this you did receive? A. Yes, sir.

Q. This Keystone letter dated March 16th, 1925, and the attached invoice dated March 9th, 1925, and the memorandum bill of lading dated March 9th, 1925, were received by you in due course through the mail. Is that correct? A. Yes, sir.

Mr. Mahoney: The letter from the Keystone Driller Co., 170 Broadway, New York, dated March 16th, 1925, addressed to the Clutter Contracting Co., Edgewood Court, Lakewood, N. J., and the Keystone Driller Co. invoice, attached thereto, dated March 9th, 1925, and the attached bill of lading from the Keystone Driller Company to the Clutter Contracting Company dated March 9th, 1925, are hereby offered in evidence as one exhibit and the Notary is requested to mark the same Defendant's Exhibit No. 37, "Keystone Driller Letter, March 16th, 1925, and attached invoice and bill of lading."

Mr. Edgerton: The exhibit in its joint and several parts is objected to as immaterial, irrelevant and insufficiently proven.

Q. In your answer to Q. 42 you said that Mr. Downie stated "that he would find out if there was any way they could hold me and see me later." Did he later see you and bring you any papers to sign with reference to this statement that he made? A. Yes, he did.

Q. When was this done? A. My recollection is that it was some time prior to the shipment of the machine.

Q. Where were these papers brought to for you to sign? A. To my residence, 17 Edgewood Court, Lakewood, N. J.

Q. Was anyone present besides you and Mr. Downie on this occasion? A. Yes, sir.

Q. Who was present on this occasion? A. I don't remember who the gentleman was but it was a man that Rex brought with him.

Q. Do you recall the nature of these papers that were brought to you on Mr. Downie's second visit to Lakewood? A. Not except that when they started to write the papers up Rex said that they were going to try to tie me hand and foot if such a thing was possible.

Q. Did you have an opportunity to read these papers? A. Not to my recollection.

Q. Were you furnished a copy of any of the papers that they required you to sign on this occasion? A. I was not.

Q. Did you request a copy? A. Yes, I did.

Q. What did Mr. Downie say? A. He said that they couldn't have any copies out, and that it was a question as to whether they could ever use the papers they had or not.

Q. These papers were separate from the mortgage and notes which you had separately signed for the purchase of the machine which he had promised you a half interest in. Is that correct?

Mr. Edgerton: Objected to as leading.

A. Yes, sir.

Q. These papers which you say you were not furnished a copy of, to what did you understand they related, or what was the purpose of having you sign them? A. So that I could not interfere with them in their protection of the patent on the drop bottom ditcher scoop.

Q. By whom do you refer to as "them" in your previous answer? A. Rex Downie or the Keystone Driller Co.

Q. Did you ever subsequently purchase a second Keystone Excavator from the Keystone Driller Co.? A. Yes, sir.

Q. Was this an outright purchase? That is the second machine. A. Yes, sir.

Q. Were both of these Keystone excavators used by you in your business after you received them? A. Yes, sir.

Q. Do you recall the names of any of the companies that you were working for after you received the Keystone machines? A. Yes, sir. The Michael Staub Company of Pitman, N. J.

Q. What kind of work were you doing for this company? A. Sub-contracting on road building.

(Narrative continued.) The amount of this subcontract money for that company in that year in accordance with my recollection was a little over $140,000.00. I only got paid for part of my work for Michael Staub Company. I do not recall how much was left unpaid, as Mr. Staub and I did not have a settlement. The reason for our not having a settlement is that we had purchased together a tract of land known as Cedar Cove on Barnegat Bay for a consideration of $55,000. The property was purchased in Mr. Staub's name with the understanding that we would incorporate a company and that when we had our settlement the amount that I was paying down would be credited to me. We had our corporation papers being made out by Vice Chancellor Berry of Toms River, N. J. On account of illness the Vice Chancellor was compelled or did go to Florida for his health. This delayed the taking out of the corporation. Just shortly after the Vice Chancellor returned from the South, Mr. Peter Staub, manager for the Michael Staub Company, died. As I had had no settlement with the Staub Company, and as the property was in Mr. Staub's name I could not claim any interest therein. The Staub estate was considered to be solvent, however, the relatives to settle up the estate informed me that there was nothing left.

Q. Did you see any attorneys to find out whether you could recover from the Peter Staub estate what was due you?

Mr. Edgerton: This line of questioning is objected to as obviously no materiality to the issues in these cases from the foregoing questions and answers.

Mr. Mahoney: Its materiality will appear later.

A. My recollection is that I did talk it over with an attorney.

Q. What did he advise you? A. I forget—he wanted me to put up some money in advance. I don't remember how much, but I know I didn't have enough at that time.

Q. In other words, you never received any money that was due you from the Michael Staub Company. A. No, nor any settlement with them. That is—no final settlement. I received some money on the work.

Q. What relation did the Michael Staub Company have to Peter Staub? A. Peter Staub did all the business to my knowledge for the Michael Staub Company, but traded as Michael Staub Company.

Q. Do you recall the names of any other companies that you did work for after you received these Keystone machines in the year 1925? A. For the Jar Construction Company.

Q. What kind of work did you do for the Jar Construction Company? A. Sub-contracting on road construction. Grading.

Q. Did this company pay you for the work you did for them? A. Part of the pay roll only. They went bankrupt.

Q. Did they owe you money when they went into bankruptcy. A. Yes, sir.

Q. How did these financial losses affect the payments you had to make on the machines that you purchased from the Keystone Driller Co., one of which machines you purchased outright, the other machine of which you were given a half interest in, according with the proposition that was made to you by Downie in the early part of 1925. A. I was not getting the money out of my work and therefore could not raise the money to pay the Keystone Driller Co.

(Adjournment taken at the point in the deposition session until 1:00 P. M. October 22nd, 1930.)

(October 22, 1930, 1:00 P. M. deposition session resumed.)

(Narrative continued.) I made some payments on the machine to the Keystone Driller Company. The Keystone Driller Company finally took these two machines back, including the one in which they gave me the half interest. Before these machines were taken away from me I had a discussion with Rex Downie of the Keystone Driller Company. This meeting with Rex Downie relative to the re-possession of these machines was had on the road that we were constructing near Roseland, New Jersey. Rex came out to see me on the road that we were working on in New Jersey and that is where the discussion took place. Besides Mr. Downie my recollec-

tion is that Howard Elmire was with him. I don't remember whether Mr. Elmire was present during the discussion I had with Mr. Downie.

Q. Will you relate as nearly as you can the conversation you had with Mr. Rex Downie on this occasion near Roseland, N. J.? A. Rex informed me that they would have to take the machine back unless I could raise the money immediately, or a portion of it. I informed him that if he took the machine away from me that it meant that I would lose anything that I might realize from the patent on the drop bottom ditcher scoop, and that if he did take the machine away that it was not going to do him any good. He said that he did not want me to feel that way about it, and I informed him that those were the facts and he could take it or leave it, and that eventually I could pay him every cent that I owed the company for that machine. He then offered to substitute a cash proposition instead of the credit proposition that I was formerly to have on the machine. His proposition was that they pay me half the amount of the anticipated credit in cash. The question then arose as to what I owed the Keystone Driller Co. on parts. In this discussion I explained to Rex the enormous amount of the parts bill or for parts that I had paid for for machines that were new in 1925, and during this discussion Rex agreed to give me a 50% discount on the parts bill that I owed the company. After the parts bill had been adjusted, the question arose as to a credit on the attachments that I had purchased with the machine and were shipped to the Arlington shop, and not lifted by me. This apparently was news to Rex. However, he thought that he should allow me only half the original cost of the parts as I had not lifted them or paid for them. This was also agreed upon.

Q. You state that he offered you a cash proposition instead of the credit proposition. Will you explain more fully what you mean by this? A. He said that the company was complaining very much or words to that effect about some notes that were overdue, and that if I would let them take the machine back, and substitute the cash proposition for half the amount, that I was to receive on the credit proposition.

Q. By credit proposition do you mean the proposition that Rex made to you in the early part of 1925 at Lakewood agreeing to give you a half interest in a Keystone excavator in consideration of your keeping quiet

about the development you made on the drop bottom instroke scoop at Joplin, Missouri?

Mr. Edgerton: Objected to as leading.

A. I do.

Q. The cash proposition then was to be a substitute for the credit proposition that was made to you at Lakewood in 1925? A. It was.

Q. Was the amount of the cash consideration they were to give you as a substitute for the machine credit mentioned at Roseland in your conversation with Mr. Downie? A. It was gone into and estimated that it would amount to around $2000.00, and after it was totalled up the deduction on the parts and credits for the attachments at Arlington that I was to have from the Keystone Driller Co. on the machine amounted to $3808.00. Therefore the cash proposition amounted to $1904.00.

Q. And you agreed to accept this cash consideration in lieu of the machine credit which had been granted to you on the machine you purchased from the Keystone Driller Co. in the year 1925? A. I did.

Q. What year was it that the Keystone Driller Company took the machine back? A. 1927.

Q. Was that the same year that Rex had the discussion at Roseland, N. J. about which you have just been testifying? A. It was.

Q. In your answer to Q. 104 you stated that you told Rex Downie when he said he was going to take the machines away from you that it was not going to do him any good. What did you mean by this statement? A. I meant that if I did not profit from the invention that I did not expect him to.

Q. Did he understand what you meant there? A. Evidently he did, for then he offered to substitute the cash proposition instead of the credit proposition.

Q. Do you know whether there were any suits pending at that time which were brought by the Keystone Driller Co. on their Downie patent on the drop bottom scoop? A. My understanding was that there was a suit pending between the Keystone Driller Co. and the Byers Machine Co.

Mr. Edgerton: Objected to as hearsay.

Q. In consideration then of the $1904.00 that was agreed to be paid to you by the Keystone Driller Co. you were to remain silent and not disclose to anyone during

the pendency of any infringement suits brought or to be brought by the Keystone Driller Co. against infringers your development and use of the drop bottom ditcher scoop which you had made and used at Joplin, Missouri, during the early part of 1920. Is that correct?

Mr. Edgerton: The question is objected to as improper. It assumes unsupported statements made by this witness and is further objected to as leading.

A. That is my recollection.

Q. Did the Keystone Driller Co. ever pay you the $1904.00 cash consideration that they agreed to give you at Roseland, N. J.? A. A part of it.

Q. What part did you receive? A. My recollection is $476.00.

Q. How was this amount paid to you—in cash, or otherwise? A. By check.

Q. Was the check made out and signed by the Keystone Driller Co.? A. I believe it was.

Q. Did you cash the check? A. I did.

Q. What became of the other part of this $1904.00 that was agreed to be paid to you? Or how was the amount of $476.00 arrived at after you had been agreed the sum of $1904.00? A. Rex apparently had forgotten that we had cut the $3808.00 in two to arrive at the $1904.00 which was in accordance with our agreement, and cut the $1904.00 in two to $952.00 and then cut the $952.00 in two to $476.00, and I was unable to show him or prove to his satisfaction, apparently, as to what our verbal agreement was.

Q. Do you recall when the Keystone Driller Co. gave you the check for $476.00? A. No, I do not.

Q. It was some time subsequent to the year 1927? Is that correct? A. Yes.

Q. After the Keystone Driller Co. had agreed to pay you the amount of $1904.00 and then kept cutting the amount in half from time to time, did you write them any letters about the matter? A. I did.

Q. Did you receive any letters in reply from the Keystone Driller Co.? A. I did.

Q. I now hand you what purports to be an original letter of two sheets and ask you to state what it is, the letter being dated November 23, 1928. A. It's an answer to one of the letters that I wrote to Rex Downie trying to explain to him and make him understand what our verbal agreement was at the time that he took the machine back.

Q. From whom was this letter received? A. From Rex Downie.

Q. What is the signature on the letter?

Mr. Edgerton: The question is objected. The letter speaks for itself.

A. Rex Downie.

Q. What is the name above Rex Downie's signature?

Mr. Edgerton: Same objection.

A. Keystone Driller Co.

Q. The letter is addressed to you at 17 Edgewood Court, Lakewood, N. J. Is it not? A. Yes, sir.

Q. Was this letter received by you in due course through the mail in reply to a letter you mailed to the Keystone Driller Co. about this matter? A. Yes, sir.

Mr. Mahoney: The Keystone Driller Company's letter dated November 23, 1928, addressed to Mr. Burn Clutter, 17 Edgewood Court, Lakewood, N. J., and signed by the Keystone Driller Co. by Rex Downie is hereby offered in evidence and the Notary is requested to mark the same "Defendant's Exhibit No. 38, Keystone Driller Co. letter to Mr. Burn Clutter dated November 23, 1928."

Q. The word "Burn" on this letter is an abbreviation of your first name Bernard. Is that correct? A. Yes, sir.

Q. Will you kindly read this letter into the record.

Mr. Edgerton: Objected to. The letter speaks for itself and there is no occasion for pursuing this course.

(Witness reads letter)

A.

KEYSTONE DRILLER COMPANY
Makers of
Well Drills, Excavators, Well Pumps
Beaver Falls, Pennsylvania

November 23, 1928.

Mr. Burn Clutter,
17 Edgewood Court,
Lakewood, N. J.

Dear Burn:

We have your letter of November 15th and are glad to see that you are still able to argue fluently. Writer has referred to our letter of February 16th with which

we enclosed check for $476.00 and by the receipt of which you indicated your satisfaction with the amount of $952.00 as the contingent cash credit substituted for the original machine credit,—which in turn went astray because of our having to take the machine back.

Now the other half of the contingent cash credit was not to become payable until and unless our case should be satisfactorily decided by the end of 1928. No decision has been made as yet. The case drags for various reasons. If your parts account had been in good shape writer would have no difficulty in securing general approval of these cash remittances, but the fact is the accounting department is being held out of a substantial parts bill which amounts to more than the contingent credit which you still have and which will become due in case the case is settled in accordance with our original deal by the end of 1928.

This leaves the writer nothing to do except point out that you owe us more than we would owe you even if the case were settled,—and that the case is not in fact settled. Hence we cannot say that we feel that there is anything due you under these circumstances.

Writer is sorry that we cannot do any better, but feels that we have no reason to actually exceed the spirit of the deal as made. (Instead we will sell you another machine some day, or Mr. Elmire and I will come down and bum another shore dinner the next time we are in Jersey, and we will stick Elmire for the smokes.)

Yours truly,

KEYSTONE DRILLER COMPANY.

RRD:FB (Signed) REX DOWNIE.

Q. Referring to the second paragraph of the Keystone letter of November 23, 1928, Defendant's Exhibit No. 38, do you know what case is referred to? A. My understanding is that it is the case between the Keystone Driller Co. and the Byers Company.

Q. That was the case brought by the Keystone Driller Co. against the Byers Company for alleged infringement of Downie patents?

Mr. Edgerton: Objected to as leading.

A. That was the understanding that I had.

Q. In the first paragraph of the letter dated November 23, 1928, Defendant's Exhibit No. 38, it is stated that

on February 16th the Keystone Driller Co. inclosed check to you for $476.00. Does that refer to the check which you have previously testified to having received instead of the $1904.00 cash amount that was promised to you at Roseland, N. J.? A. It does.

Q. I now hand you what purports to be an original letter dated December 4th, 1928, consisting of three sheets, and ask you to state what it is. A. It is an answer to my letter apparently of November 28th, trying to tell me that they don't owe me any money.

Q. From whom was the letter received? A. Keystone Driller Co.—Rex Downie.

Q. And it is addressed to you at 17 Edgewood Court, Lakewood, N. J.? A. Yes, sir.

Q. To what transaction does this letter refer? A. To the cash proposition which substituted the original credit proposition.

Q. That is, to the deal that was made between you and Rex Downie of the Keystone Driller Co. and to which you have previously testified in this deposition. Is that correct? A. That is right.

Q. Was this letter received by you in due course through the mail in reply to the letter dated November 28th, which you sent to the Keystone Driller Co.? A. It was.

Mr. Mahoney: The Keystone Driller Co. letter dated December 4th, 1928, addressed to Mr. Burn R. Clutter, 17 Edgewood Court, Lakewood, N. J., consisting of three sheets and signed Keystone Driller Co. by Rex Downie, is hereby offered in evidence and the Notary is requested to mark the same "Defendant's Exhibit No. 39, Keystone Driller Co. letter to Mr. Burn R. Clutter, dated December 4th, 1928."

Mr. Edgerton: The Exhibit 39 as well as the letter, Exhibit 38, is objected to as not being accompanied by the letters to which they purport to be answers.

Q. The originals of your letters were of course sent to the Keystone Driller Co. and are not now in your possession. Is that correct? A. It is.

Q. Will you kindly read the Defendant's Exhibit No. 39 into the record?

Mr. Edgerton: Objection is repeated that the letter speaks for itself and objection is made to reading the letter into the record.

A.

KEYSTONE DRILLER COMPANY
Makers of
Well Drills Excavators Well Pumps
Beaver Falls, Pennsylvania

December 4, 1928

Mr. Burn R. Clutter,
17 Edgewood Court,
Lakewood, N. J.

Dear Burn:

We have your remonstrance of November 28th and of course have read same carefully.

In trying to find out how or why we could have gotten so far apart in our ideas, after we thought the matter was so carefully arranged to avoid misunderstandings, etc., writer has carefully gone back over the correspondence and memorandum of agreement, and we think we have the explanation of the misunderstanding.

Here is a verbatim copy of Paragraph 4 of the agreement.

"It is agreed that the payment of one-fourth of the price of the machine and equipment named in second paragraph shall be suspended only until two years from date hereof, in anticipation of the possible occurrence of one of the contingencies named in the third paragraph, and that if at that time none of the contingencies named shall have occurred then the third paragraph hereof shall definitely lapse and the suspended one-fourth part of the price shall at once become due and payable in money."

We never thought that this paragraph could be misunderstood, as meaning anything else than that the second quarter of the price of the machine could be held up by you for two years from the date of the deal on the chance that one of the three contingencies named in the third paragraph might occur and that if, by the end of two years not one of the above contingencies had occurred, then that second quarter of the price of the machine should be paid by you in money forthwith. We used the plain language "then the third paragraph hereof shall definitely lapse"; this cannot mean anything except that we could not wait any longer for the favorable settlement of the suit,—which was to be the reason for our issuing you the second quarter of credit.

Now possibly you read this fourth paragraph (after having forgotten our verbal explanation and repetition

of it) as meaning that *we* should pay *you* a quarter part of the price of the machine in money, but the third paragraph, it seems to us, is very clear on the point that the Company was only to hold the offer open for two years, —"subject to the time limit contained in fourth paragraph hereof"—.

Then of course we extended the time within which the contingencies might occur with effect until the end of 1928,—this by our letter of February 16th, 1928; but in the offer to so extend the time we also required substitution of $952.00 as the amount of the contingent credit instead of the original $1904.00 representing the second or contingent quarter of the price of the machine,—this in view of the fact that the machine had been re-possessed, and that therefore any consideration given by the Company under the provisions of third paragraph of the agreement would have to be a cash consideration instead of a credit against merchandise. The deal was really fulfilled, and the Company not required, under it, to do *anything* more, on April 11th, 1927,—that is two years from the date of the deal. By that time you had been given the primary and certain consideration of a quarter interest in the machine, and you had used up this quarter interest in wear and tear of the machine. We did not take back the machine until after its value had dropped considerably below the amount we had against it after crediting you with the amount you had paid in case, and the amount of the first credit of $1904.00. So we take it that there is no possibility of your referring to the first quarter. And we have endeavored above to set right any misunderstanding there might have been in regard to the second quarter.

The status of the affair at this point is that if any-one of the three contingencies involved occurs before the end of 1928 there will be a payment of $476.00 due you from the Company; but your failure to have paid your account out causes Mr. Smith to object to the payment of this final amount even if it *should* become due, as it is common practice to offset one debt against another.

We trust that the above will clear the matter up, as we would regret having you dissatisfied in regard to fulfillment of the deal.

We are

Yours truly,

KEYSTONE DRILLER COMPANY.

RRD:FB (Signed) Rex Downie.

Q. I now hand you what purports to be an original letter dated December 17, 1928, and ask you to state what it is. A. It relates to the contracts or arrangements between the Keystone Driller Co. or Rex Downie and myself in regard to the drop bottom ditcher scoop that I designed at Joplin, Missouri.

Q. From whom was the letter received? A. Rex Downie of the Keystone Driller Co.

Q. And it is addressed to you at 17 Edgewood Court, Lakewood, N. J.? A. That is correct.

Q. Was this letter received by you in due course through the mail in reply to a letter which you mailed to the Keystone Driller Co.? A. In accordance with my recollection it was.

Mr. Mahoney: The Keystone Driller Co.'s letter just identified by the witness dated December 17th, 1928, addressed to Mr. Burn R. Clutter, 17 Edgewood Court, Lakewood, N. J., and signed Keystone Driller Co., by Rex Downie, is hereby offered in evidence, and the Notary is requested to mark the same "Defendant's Exhibit No. 40, Keystone Driller Co.'s letter to Burn R. Clutter, dated December 17, 1928."

Mr. Edgerton: The exhibit is objected to as not being accompanied by the letter to which it purports to be an answer.

Q. Do you have the original letter to which Defendant's Exhibit No. 40 is a reply? A. I don't believe I have.

Q. Defendant's Exhibit No. 40 makes reference to the fact that you signed an affidavit. Was this one of the papers that Mr. Downie brought down to Lakewood for you to sign so as to tie you hand and foot as he expressed it? A. Evidently it was.

Q. When did you first discover that one of the papers you signed at Lakewood on that occasion was an affidavit?

Mr. Edgerton: The question is objected to as leading.

A. When Mr. Downie was leaving he said "There was an affidavit in these papers that you signed."

Q. Do you recall having been sworn to any affidavit at that time? A. I do not.

Q. The first you knew, then, that there was an affidavit in the papers was when he went out the door and

made that statement that you have just referred to. Is that correct? A. That is my recollection.

Q. Will you kindly read Defendant's Exhibit No. 40 into the record?

Mr. Edgerton: Same objection as before.

A. (Witness reads letter).

KEYSTONE DRILLER COMPANY
Makers of
Well Drills Excavators Well Pumps
Beaver Falls, Pennsylvania

December 17, 1928

Mr. Burn R. Clutter
17 Edgewood Court,
Lakewood, N. J.

Dear Burn:

Of course we do not like to have you call us all these hard names, but we do not see that we can do anything about it. At least the writer knows of nothing more to say beyond what is said in our letter of December 4th. We made a contract with you, and we believe that that contract has been or is being correctly and properly discharged. The consideration from you to us was that you conveyed to us whatever possible undetermined rights you might have or might come to have arising out of your Joplin experiment; also as a part of the consideration, you made affidavit as to the abandonment of that experiment. The only circumstance which has arisen and which was not anticipated or provided for in our written deal was that even with the benefit of the $1904.00 credit you were not able to pay out on the machine, and hence that you have nothing at the present time to evidence the credit rendered as the first and certain portion of the consideration from the Company to you. However, our check for $476.00 dated on or about February 16, 1928, evidences the mutual agreement to substitute the $952.00 cash consideration for the original $1904.00 merchandise-credit consideration. The payment of that check represents a going beyond our obligation.

Yours truly,

KEYSTONE DRILLER COMPANY,

RRD:FB (Signed) REX DOWNIE.

Direct examination closed.

Mr. Edgerton: Without waiving the right of cross examination, the entire testimony of this witness is objected to as this witness has previously testified in these cases, and as the defendants have no right to take depositions a second time for the same witness.

Mr. Mahoney: In reply to objection just made by counsel for plaintiff, counsel for defendant wishes to state that it is well settled law that the deposition of the same witness may be taken the second time under United States Revised Statute 863, 864 and 865 under which this deposition was taken.

CROSS EXAMINATION by Mr. Edgerton.

Q. Now, Mr. Clutter, in these altercations between yourself and Mr. Downie the balance or credits you alleged that were due you became quite extended argument, did they not? A. They did.

Q. And it was over quite a period of time. Was it not? A. It was.

Q. And the friendly relations between yourself and Mr. Downie, or Rex, became altered or strained, did they not? A. It certainly did cause some feeling, for there was no question on my part but what Rex Downie had not carried out his part of the verbal cash agreement arrived at at or near Roseland, N. J.

Q. But you didn't feel this animus until Mr. Downie finally refused to pay the sum you alleged that was due you? A. No, not to any great extent.

Q. Now you have testified that your first negotiations with Mr. Downie were made privately and that no one else was present. Is that correct? A. That is correct?

Mr. Mahoney: Objected to on the ground that the question does not give the date of the negotiations referred to, or the place where the negotiations took place.

Q. I refer to the meeting in Lakewood at your home in the early part of 1925. Do you wish to change your answer? A. It is my recollection it was in the early spring of 1925 or winter. I do not care to change the answer.

Q. I now hand you what purports to be a copy of a letter written by you on February 6, 1928, to Mr. Rex Downie and ask you if you can identify this letter in substance as one you wrote to Mr. Downie.

Mr. Mahoney: Objection is made to the above question on the ground that the paper being submitted to the

witness is admittedly not the original letter which it is claimed that the witness wrote, and therefore the witness has no means of knowing whether or not the letter is the one which he is alleged to have written. The witness is entitled to the production of the original letter which it is claimed he wrote, under the rules of evidence, before he is required to answer.

Mr. Edgerton: The original of the letter will be produced in due course and this witness has only been asked to identify the copy as to substance. It is believed therefore that the question is proper subject to verification when counsel is able to produce the original letter.

Mr. Mahoney: My objection is insisted upon.

(Recess taken in deposition session until 7:30 P. M. October 22nd, 1930.)

(After recess deposition session resumed.)

Mr. Edgerton: Inasmuch as the original letter referred to in XQ. 161 has been sent for the witness will not be asked to make response until said letter is received.

Q. You have testified that Mr. Downie asked you to sign an agreement some time in 1925, and that the agreement related to the purchase of a Keystone excavator on which there were alleged credits. You also testified that you had no opportunity to read this agreement. Is that correct? A. That is my recollection.

Q. Do you remember whether you signed this agreement or not? A. I signed some papers, but I do not remember what they were.

Q. Do you usually sign papers without reading them? A. Not ordinarily.

Q. But you think you did this time? A. That is my recollection.

Q. Then if you didn't read the agreement, you would be unable to identify the same now, would you not? A. I understand what the substance and purpose of the agreement was intended for, and believe that I could identify it.

Q. Well, disregarding what you thought the purpose of the agreement was, how can you state what the substance of the agreement actually signed by you was at that time? A. The substance of the agreement was to sell to the Keystone Driller Co. the invention or design of the drop bottom ditcher scoop that I had gotten up at Joplin, Missouri. It was either to sell to the Keystone

Driller Co. or to Rex Downie—I don't remember which one.

Q. Now this happened about five years ago, and apart from the letters that you referred to in your testimony today, you are testifying entirely from memory. Are you not? A. I am.

Q. Moreover, if as you say, you didn't read the agreement, there might have been other matters in this agreement which you have now forgotten. Is that correct?

Mr. Mahoney: This line of cross examination is objected to on the ground that the questions are related to a written instrument and the witness is not required to answer any questions regarding the written instrument unless and until the written instrument is first produced and he has identified it and given an opportunity to inspect it, to ascertain if it is the instrument which he signed.

Mr. Edgerton: This witness has testified at great length regarding this transaction, and it is believed, therefore, that this line of cross examination is proper to test the witness's memory.

A. There may have been.

Q. Now the affidavit to which you have previously referred, what is your recollection as to when this instrument was signed?

Mr. Mahoney: Same objection as XQ. 169.

A. My recollection is that all the papers that were signed were signed all at the same time in regard to this agreement.

Q. You don't remember of having subscribed to the affidavit before a Notary. Is that right?

Mr. Mahoney: Same objection as XQ. 169.

A. There was a man with Rex Downie at this time; as to whether or not he was a Notary, I do not remember.

Q. Did he or did he not administer an oath when you signed the papers? A. Not to my recollection.

Q. I now hand you a paper entitled "statement" dated April 16th, 1925, and ask you whether this is your signature. A. It looks like my signature.

Q. Do you identify that affidavit as the one to which you have previously referred to in direct examination? A. This is possibly the one.

Q. Well, is it or is it not? A. This is the affidavit in question.

Mr. Edgerton: It is requested the affidavit just referred to be marked by the Notary for identification as "Plaintiff's Exhibit A."

Q. In your answer to Q. 34 where you referred to your meeting with Mr. Downie at your residence, did Mr. Downie tell you the details of the structure for which he had made application for patent? A. He did partially acquaint me with the details at the time that the argument took place in regard to his or their taking out a patent on the principles of my design. However, the full details were not gone into.

Q. Are you sure that Mr. Elmire was not present at this meeting, that is, the meeting which you have alleged took place outside of your home? A. Absolutely, sure. I was instructed by Mr. Downie to say nothing to Elmire in regard to the purpose of his visit.

Q. Why didn't you apply for a patent on the device you experimented with in Joplin?

Mr. Reed: The question is objected to as outside of the direct examination. The direct examination was limited to the agreement and collateral matters, and it had nothing to do with the making of the drop bottom scoop, which was covered in a former deposition by this witness.

Mr. Edgerton: It is believed that this question is entirely proper. By reference to Q. 10 and subsequent questions in this deposition taken at this hearing reference has been made to the Joplin excavating job.

A. Because I was informed by Mr. Oliver at that time manger of the Joplin branch, of the Keystone Driller Co., that Rex Downie had gotten up a drop bottom ditcher scoop and was taking out or had taken out a patent, and that that office was not aware of that fact.

Q. So you never saw a patent attorney or attempted to do anything further after that, towards securing a patent?

Mr. Reed: Same objection.

A. No, at that time I believed that Mr. Oliver was telling me the truth.

Q. And you didn't do anything towards securing a patent after your interview with Mr. Downie to which you have recently referred, that is, the interview at Lakewood in the early part of 1925? A. No. I did not.

Q. Have you a bill of lading or the bill of lading for the second Keystone excavator you received? A. I have the memorandum of the bill of lading.

Q. Can you produce the same? A. Yes, sir.

(Witness produces bill of lading)

Q. Was the Clutter Contracting Co. a partnership? A. It was intended to be at the time that I started trading as Clutter Contracting Co.

Q. Was it in March, 1925? A. No, it was not a partnership at that time, in fact it never did become a partnership.

(Adjournment was taken at this point in the deposition session until 1:30 P. M., October 23, 1930.)

(October 23, 1930, 1:30 P. M., deposition session resumed.)

Q. I hand you a letter dated November 13, 1928, and ask you to state whether you can identify this letter as one having been written by yourself to Mr. Downie. A. Yes, sir.

Q. I call your attention to the date 11-13-28, and the pencil notation above the 11—you did not make this correction, did you? A. I did not.

Mr. Edgerton: The Notary is requested to mark the letter just identified by the witness as "Plaintiff's Exhibit B" for the purpose of identification.

Q. I now hand you a letter dated November 15, 1928, and ask if you can identify this letter as one having been written by yourself to Mr. Rex Downie. A. Yes, I think that was my letter.

Q. Can't you make a more definite statement. Is this not in your handwriting? A. Yes, sir, I believe it is. There is evidently a mistake in the date of one of the letters, but there is no question in my mind that it is my letter.

Mr. Edgerton: The Notary is requested to mark for purposes of identification the letter just identified by the witness as "Plaintiff's Exhibit C."

Q. I now hand you a letter dated November 28, 1928, and ask you if you can identify this letter as one having been written by yourself to Mr. Rex Downie. A. That is right.

Q. I call your attention to some penciled memorandum on the face of this letter. These notations were not placed there by yourself, were they? A. No, sir.

Mr. Edgerton: The Notary is requested to mark for purposes of identification the letter just identified by the witness as "Plaintiff's Exhibit D."

Q. I now hand you a letter dated January 9, 1928, directed to Mr. Rex Downie, and a carbon copy of a letter dated January 18, 1928, which is appended thereto, and ask you whether you can identify the letter written in longhand as one written by yourself to Mr. Downie. A. This is my letter.

Q. I call your attention to certain pencil notations appearing on the face and the back of page 1 of the letter. These notations were not placed there by yourself, were they? A. They were not.

Mr. Edgerton: The Notary is requested to mark for purposes of identification the letter of January 9, 1928, just identified by the witness as "Plaintiff's Exhibit E."

Q. I now call your attention to the carbon copy of the letter attached to your letter of January 9, 1928, this letter being dated January 18, 1928, and directed to B. R. Clutter, Lakewood, N. J., signed by Keystone Driller Co., initialled R.R.D./B.F. in the lower left-hand corner. Can you identify this letter as a copy of one received by you from Keystone Driller Co. or Mr. R. R. Downie?

Mr. Mahoney: Will counsel for Plaintiff please state on the record if the carbon copy referred to is the carbon of the original letter purported to have been sent to the witness, and made at the time contemporaneously with the original letter.

Mr. Edgerton: It is my understanding that it is.

A. I believe that I did receive that letter.

Mr. Edgerton: The Notary is requested to mark for purposes of identification the letter just identified by the witness as "Plaintiff's Exhibit F."

Q. I now hand you a letter dated February 6, 1928, directed to Mr. Rex Downie, and ask you to state whether you can identify this letter as one having been written by yourself to Mr. Downie. A. Yes, sir.

Mr. Edgerton: Notary is requested to mark for purposes of identification the letter just identified by the witness as "Plaintiff's Exhibit G."

Q. I now hand you a carbon copy of a letter dated February 16, 1928, directed to Burn R. Clutter, signed by Keystone Driller Co., initialled RRD.FB, and ask you to state whether or not you can identify this carbon copy as a copy of a letter received by you from Keystone Driller Co. or Mr. Downie.

Mr. Mahoney: Counsel is requested to state if this carbon copy was made simultaneously with the writing of the original letter.

Mr. Edgerton: It is my understanding that it is.

A. My recollection of the letter received with the check for $476.00 was that it was a one-page letter, nevertheless I may be mistaken in this matter, and this may be a true copy.

Q. Do you remember receiving a letter in reply to yours of February 6, 1928, and which was in substance the same as the letter just handed you?

Mr. Mahoney: Objected to on the ground that the witness has stated that he has not been able to positively identify this letter as having been received, therefore cannot be further questioned along this line.

A. I do not remember the exact date that I received the letter enclosing check, nor the entire substance of same. However, the letter that I received in substance was somewhat similar.

Mr. Edgerton: The Notary is requested to mark the letter of February 16, 1928, directed to Mr. Burn R. Clutter and of which the witness has just testified, for purposes of identification, "Plaintiff's Exhibit H."

Q. I now hand you a copy of a memorandum which purports to be an agreement between Burn R. Clutter and the Keystone Driller Co., and ask you if you can identify this instrument as a copy of the agreement to which you have previously testified to as being entered into between yourself and Mr. Downie in the early part of 1925.

Mr. Mahoney: The above question is objected to on the ground that the paper handed the witness is not the original and is unsigned and undated, and therefore makes it impossible for the witness to determine whether or not he ever signed such a paper nor has the absence of the original purported agreement been explained or excused in any manner, and in the absence of the original it is impossible for the witness to identify the paper referred to.

A. The memorandum is not true in detail, and as the writer did not read the papers that he signed, it is impossible for me to identify this memorandum.

Q. If you didn't read the memorandum, how do you know it is not true in detail? A. Because I have just

now read the memorandum, which speaks of myself and Herbert Wallower having this arrangement built in a shop at Pittsburgh, Kansas, and tried out in Joplin, Missouri, as the scoop was actually built in the Keystone shops by the Keystone Co. at Joplin, Missouri.

Q. Do I understand you then to deny that you signed an agreement of which this is a copy?

Mr. Reed: The witness having stated that not having read the papers at the time they were signed by him, he cannot possibly identify this as one of the papers signed, it is obvious that the question is improper, and is therefore objected to.

Mr. Edgerton: The witness has previously stated that he was able to identify this agreement.

A. If in my previous statement I have said that I could identify the agreement, I meant only by my signature, and as this memorandum is unsigned, I am unable to identify it.

Mr. Edgerton: The paper last referred to by the witness, to wit, copy of memorandum agreement between Burn R. Clutter and the Keystone Driller Co. is now handed the Notary with the request that the same be marked for purposes of identification as "Plaintiff's Exhibit I."

Mr. Mahoney: Counsel for defendant wants it to be clearly understood that the papers which you have marked for identification as Plaintiff's Exhibits A to I inclusive are not now being offered in evidence. Is that correct?

Mr. Edgerton: Yes.

Q. Did you not make repeated efforts after receipt of the letter, Defendant's Exhibit 40, which apparently is the last correspondence between yourself and Mr. Downie, to secure payment of your alleged claim against Mr. Downie or the Keystone Driller Co.? A. My efforts to collect the balance of the money that I felt was justly due me from the Keystone Driller Co. were to the best of my recollection by correspondence.

Q. And you didn't talk to Mr. Downie or anyone else after your correspondence ceased, endeavoring to make further settlement of the claim? A. Well, I am not sure whether I did or not.

Q. Do you remember of talking to Mr. Lysle Hazen about this matter? A. Yes, sir, I do.

Q. Do you remember what you told him at St. Louis in the early part of 1929? A. No, I do not.

Q. Did Mr. Downie or the Keystone Driller Co. pay you any money after February 16, 1928, as indicated in the letter identified as "Plaintiff's Exhibit H." A. No, not after that.

Q. Did you talk to Mr. Wagner or Mr. B. C. Clutter about this matter prior to April 12, 1929? A. I don't remember the date but I talked to them regarding the drop bottom ditcher scoop.

Q. Did you ask either of them to see Mr. Downie or anyone in the Keystone Driller Co. regarding this matter?

Mr. Mahoney: Objected to on the ground that the question does not state the date and place at which the alleged conversation is to have taken place.

A. My recollection is that they asked me to permit them to see the Keystone Driller Co. and see if there could not be some kind of an arrangement made whereby the actual facts in regard to the invention of this scoop would not come out at that time.

Q. Do you know whether or not either Mr. Wagner or Mr. B. C. Clutter saw Mr. Downie or the Keystone Co. regarding the questions they asked you and as referred to in your answer XQ. 206? A. My recollection is that they either saw the Keystone Driller Company or some of their officials or phoned them. However, to my knowledge, there were no arrangements made between the two companies.

Cross examination closed.

RE-DIRECT EXAMINATION by Mr. Mahoney.

Mr. Mahoney: The Keystone bill of lading dated July 14, 1925, consigned to the Clutter Contracting Co., Tuckerton, N. J., produced by the witness in answer to XQ. 182 is hereby offered in evidence as "Defendant's Exhibit 41" and the Notary is requested to mark the same "Keystone bill of lading dated July 14, 1925, to Clutter Contracting Co. of Tuckerton, N. J."

Q. Who is B. C. Clutter referred to in XQ. 205? A. My brother.

Q. Do you know what company Mr. Wagner and Mr. B. C. Clutter are connected with or employed by? A. Star Drilling Machine Co. of Akron, Ohio.

Q. Did you have anything to do with the preparation of the papers which have been marked for identifica-

tion as "Plaintiff's Exhibit A"? A. This was prepared I believe by Rex Downie for the purpose, as he related it, of tying me hand and foot. I am sure these were the words used. I don't think I had anything to do with the preparation of the papers.

Q. Did you retain or make copies of the papers which have been identified as "Plaintiff's Exhibits B, C, D, E and G which you identified as letters which you wrote to the Keystone Driller Co. or Rex Downie? A. No, I did not make copies.

Q. Did you preserve the original of the letter marked for identification as "Plaintiff's Exhibit F" after it was received by you? A. I don't know whether I did or not.

Q. In answer to XQ. 205, you stated that Mr. Wagner and Mr. B. C. Clutter asked you to permit them to see the Keystone Co. to see if there could not be some kind of an arrangement made whereby the actual facts in regard to the invention of this scoop would not come out at that time. Did Mr. Wagner and Mr. B. C. Clutter of the Star Drilling Co. know that you had invented the drop bottom scoop? A. They did.

Q. Had the Star Drilling Co. been threatened with suits for infringement by the Keystone Co. on the Downie drop bottom patent at that time?

Mr. Edgerton: The question is objected to as the answer would be based on hearsay.

A. My understanding is that they had been warned by the Keystone Driller Co.

Mr. Edgerton: Objected to as hearsay.

Q. Then it is your understanding as stated in your answer to XQ. 207 that Mr. Wagner and Mr. B. C. Clutter had a meeting with the Keystone Driller Co. after they had been warned of infringement. Is that correct? A. My understanding is that they were in conversation with them in an interview or by telephone regarding that matter.

Q. The Star Drilling Company were never sued for infringement. Is that correct?

Mr. Edgerton: Same objection as before.

A. I do not know.

Q. You have never heard that The Star Drilling Co. were sued for infringement, have you? A. I have not.

Re-Direct examination closed.

Deposition closed.

(Certificate of Notary omitted.)

The Court: What was the claimed date of the first Downie patent?

Mr. Williams: He filed his application on January 27, 1921; I will give you the chronology of the events. The work in Joplin was in December, 1919, and January and February, 1920. Downie, as I got it from some affidavits in the case, conceived his invention some time after that, he says.

The Court: Well, does he say that in his papers?

Mr. Williams: No, not in these papers. It is in the affidavit on the motion to produce in this case.

The Court: What does he say in that affidavit to be the date of it?

Mr. Williams: He doesn't say. He conceived his invention after the work at Joplin, and then he filed his application June 27, 1921, and the patent was issued October 7, 1924, No. 1,511,114. Then, I might as well give you these dates as I go along—then on December 22, 1926, the Byers bill was filed. I might say first, however, that the Downie patent was issued in 1924, and then this first settlement, where he was to get this credit on the machine, etc. was made in or around April, 1925. So to get now, the work was in 1920, the Joplin work, Downie's conception, his claimed conception, some time after that, and then some time after that again he heard of the Joplin work, and then after that, to-wit, June 27, 1921, he filed the application for the first Downie patent, and it was issued October 7, 1924. Then this settlement with Downie, or between Downie and Clutter, occurred around in February, March and April, that they had their talks, of 1925, and then the Byers suit was brought in December of 1926, and then in 1927 the machines were repossessed and the cash consideration substituted and the Byers trial was held before Judge Westenhaver in September, 1927, and then in 1928 comes along some correspondence and testimony which I will now come to between Downie and Clutter, as to what all these things were about and what they really had been.

Downie says in the affidavit which was filed in this case on this motion, that he invented the excavating machine disclosed in that patent prior to learning anything

about the machine or the experiment at Joplin. I don't know what the date was, but that is the only information I have on that subject.

Then Defendant's Exhibit 38 was identified as a letter from Downie to Clutter, and in that letter there was a reference made to some case. The letter was dated November 23, 1928, and he said he understood that it referred to the Byers case.

The Court: It had not been brought at that time, however.

Mr. Williams: Yes, the Byers case was brought, Your Honor, in December, 1926.

The Court: Oh, I didn't get the right date out of the depositions. What was the date in the deposition that you just read, I mean the date of that letter?

Mr. Williams: The date of the letter was in 1928, November 23, 1928.

And then he identifies a couple of other letters, one of December 4, and I shall read the letter when I get them in the proper sequence, and then he identifies another letter to him from Downie, Exhibit 40, of September 17.

The Court: Is this the deposition which was referred to when there occurred the occasion on which exhibits were handed up to this witness and identified, and then withdrawn?

Mr. Williams: Yes, that comes in the cross-examination. These three or four letters were letters that Clutter had in his possession, sent to him by Downie, and they were identified, or read into the record, and then when it came to the cross-examination, plaintiff's counsel had a lot of the other letters, to which we shall presently refer, identified by the witness and marked, but he did not introduce them. And then subsequently the wrangle came—

The Court: Whether you should have had copies?

Mr. Williams: Yes.

Mr. Mahoney: We had two depositions. The first wrangle that Your Honor refers to occurred during the taking of the first deposition. They submitted some kind of a paper, and would not let us read it, and later on in this deposition they submitted some more papers.

The Court: That happened in both cases?

Mr. Mahoney: Yes.

Mr. Williams: In both cases. Now this Exhibit 40, that is one of the letters that he identified, which make a reference to the fact that he signed an affidavit.

The Court: Does that finish the depositions?

Mr. Williams: Just one more supporting deposition, Your Honor, and this is the deposition of Frederick W. Ransom. I will read a portion of that deposition. The deposition as a whole is now offered in evidence.

DEPOSITION FOR THE DEFENDANTS

Taken at Akron, Ohio.

NOTICE OF TAKING TESTIMONY.

Mr. Philip E. Siggers,
918 F Street, N. W.,
Washington, D. C.

Messrs. Richey & Watts,
1090 Union Trust Building,
Cleveland, Ohio.

Attorneys for Plaintiff:

Please take notice that the defendant herein will take the testimony of Frederick W. Ransom, 103 Victor Avenue, Cuyahoga Falls, Ohio, who resides more than one hundred (100) miles from the place of trial herein, for use on behalf of the defendant at the final hearing of this cause, before Mary McGowan, a Notary Public in and for the County of Summit, Ohio, who is not of counsel nor interested in this cause, at the office of Mary McGowan, Room 215, Ohio Building, Akron, Ohio, on the 24th day of October, 1930, at ten o'clock A.M., and thereafter from day to day as the taking of the depositions may be adjourned; and such testimony will be taken in accordance with the provisions of Sections 863, 864 and 865 of the Revised Statutes of the United States and the Federal Equity Rules.

You are invited to attend and cross-examine.

Edwin P. Corbett.

Dated at Columbus, Ohio, this 18 day of October, 1930.

Service of a copy of the above notice of taking testimony is hereby acknowledged this 20 day of October, 1930.

Richey & Watts,
Attorneys for Plaintiff.

PRINTER'S NOTE:

A like notice was issued on behalf of the General Excavator Company and was signed by Mr. Edward L. Reed.

The following deposition was taken on behalf of both defendants, pursuant to the above notice, at the office of Mary E. McGowan, Notary Public, 215 Ohio Building, Akron, Ohio, commencing at ten o'clock A.M. on the 24th day of October, 1930. Counsel for all parties being present.

FREDERICK W. RANSOM, a witness called by defendants, being first duly sworn, testified as follows:

DIRECT EXAMINATION by Mr. Mahoney.

My name is Frederick W. Ransom. I reside at 103 Victor Avenue, Cuyahoga Falls, Ohio. I am retired at present. I will be fifty-eight November 27th this year. I am testifying under subpoenas in these cases. I was formerly employed by the Keystone Driller Company of Beaver Falls, Pa. I began work at the Keystone Driller Co. as bookkeeper in 1894 and was advanced as Assistant General Manager, Treasurer, and General Sales Manager. Was then transferred to New York office, in 1923 and was in charge of accounts as Credit Manager and in charge of sales in the Export Department. I left the employ of the Keystone Driller Company March 1, 1927. I am acquainted with Bernard R. Clutter who was formerly employed by the Keystone Driller Company. I recall that I was in Joplin, Missouri, on business for the Keystone Driller Company two or three times a year after the Keystone opened their shops at that place. I think that the Keystone opened their shops in Joplin about 1913. I recall being in Joplin at the time when the Joplin Supply Company's excavation was being done. I saw the excavation being done at the site where the Joplin Supply Company building was being erected. The Keystone excavator was being used to excavate the basement on this job. The operator was Bernard R. Clutter.

Q. Your answer to question 7, you have stated that you were transferred by the Keystone Driller Co. to their New York office in the year 1923 and had charge of accounts as Credit Manager at that point. While you were Credit Manager at the New York office, subsequent

to the year 1923, do you recall whether or not the Keystone Driller Co. had any account with Bernard R. Clutter at that time living in New Jersey?

Mr. Edgerton: Objected to as leading.

A. Yes.

Q. Do you recall what these accounts were for?

Mr. Edgerton: Same objection.

A. For the purchase of two excavators and supplies and parts.

Q. Did you ever have occasion to press Mr. Clutter for a collection of these accounts?

Mr. Edgerton: Same objection.

A. Yes, Mr. Clutter was almost always in arrears on his payments as specified by contract; on which he purchased the excavators.

Q. Do you remember at any time Mr. Clutter questioning or disputing the amounts which you claimed were due on these machines, for any reason?

Mr. Edgerton: Objection is again made to this line of examination, because it is leading and this objection stands without repetition for any following examination of this order.

A. Mr. Clutter never questioned our account except that he claimed he had a credit due him which we did not have on our books and repeatedly stated that Rex Downie knew about this credit that should be given him on his account.

Q. Would he explain to you in any way the nature of the credit claimed was due him? A. He did not.

Q. He just kept telling you to ask Rex Downie about it? A. Yes.

Q. Did you subsequently take up with Mr. Rex Downie, the matter of these credits claimed by Bernard R. Clutter on the two excavators you say he had purchased from the Keystone Driller Company about which you have been testifying? A. Yes.

Q. Will you kindly relate where and when you took the matter up with Mr. Rex Downie and state as nearly as you can just exactly what took place? A. In the early part of December of 1926 I had occasion to go to Beaver Falls in connection with an agency to be established in Cuba for the account of sales of Keystone excavators, and at the same time to go over with the Treasurer Mr. Smith a number of accounts in New York

territory, among these the account of Bernard R. Clutter. I stated to Mr. Smith, Clutter's reason for withholding payments on his account and asked him if he knew anything about the credits claimed by Clutter, stating that Clutter always claimed that Rex Downie could clear up the matter. He then called in Mr. Rex Downie on this account. Mr. Downie seemed surprised that no credit had been allowed and said that he had given Mr. Smith a memorandum on the matter. Mr. Smith then found a memorandum which called for a credit, I believe of $1000.00 and said that he had not made the credit on the books, because he understood the credit was not to be made until a suit then pending was decided. Mr. Downie said, no, that one half the credit I believe $500.00 was to be made immediately and the balance was to be allowed in case of a favorable decision on this case. It was then decided that the credit was to be made for the 1/2 the amount and that I was to so notify Clutter and insist on payments of his account. I am not sure how this credit was entered on the books but believe it was through my original entry through credit memorandum book from the New York office. This would be early in December 1926.

Q. Did Mr. Smith or Mr. Downie explain to you at that time just why Clutter was being given this credit? A. No, sir.

Q. Can you state what suit it was that was pending that this credit referred to? A. Neither Mr. Downie nor Mr. Smith mentioned the name of the suit but as the only important suit the Keystone Driller Co. had pending at the time was the one against the Byers Shovel people at Ravenna, Ohio, for infringements, I presume that was what was intended.

Mr. Edgerton: The last answer is objected to as conclusion and is not a statement of fact, would therefore move that the same be stricken out.

Q. Do you recall what Mr. Robert Rex, or Rex Downie as he was usually called, position was with the Keystone Driller Co. at the time you made this call to the Beaver Falls office, about which you have just testified? A. I believe he was General Manager.

Q. At the time you were Credit Manager of the New York office, for the Keystone Driller Company, was there a gentleman employed there by the name of Mr. Howard Elmire?

Mr. Edgerton: Objected to as leading.

A. Yes.

Q. While you were Credit Manager of the New York office of the Keystone Driller Co., do you recall of any occasion that Mr. Rex Downie and Mr. Howard Elmire made a visit to Lakewood, New Jersey, to see Bernard R. Clutter? A. Yes, I knew of such visit because I discussed Clutter's account with Mr. Elmire, who was traveling salesman and who had occasion to see Mr. Clutter from time to time and in my talk with Mr. Clutter about the credit which he claimed, he stated that it was arranged while Elmire was there with Rex Downie at that time.

Q. Did you ask Mr. Elmire what took place on that visit with Mr. Downie to see Mr. Clutter at Lakewood, N. J.? A. Yes, and Elmire claimed that he did not know what took place. That Clutter and Rex Downie had their conversation off to one side and he did not know what was said.

Q. Do you recall whether Clutter ever paid out the accounts on the two machines about which you have been testifying? A. When I left the Company, these accounts were still open on the books, had not been paid up.

Direct examination closed.

Cross Examination by Mr. Edgerton.

Q. You are testifying entirely from memory, are you not? A. Yes, sir.

Q. And to facts which you aver took place over four years ago? A. Yes, sir.

Q. Did Mr. Downie or Mr. Smith give you any memorandum or written order to change or credit the books in New York at the instance of the discussion you have referred to in your answer to Q. 23? A. No, sir. But if credit was made as indicated in that answer, one copy of the memorandum would go to Beaver Falls and the credit was actually entered on the customers' ledger there as appeared in subsequent statements.

Q. Do you know whether or not there was some altercation between Mr. Clutter and the Keystone Driller Credit Department, concerning Mr. Clutter's receipt of certain accessories or parts for the machines he purchased? A. I do not think there was any altercation, but do know that one or possibly two of the buckets specified on his order for second machine, did not go out

on the carload with the machines but what adjustment of this was made, cannot say as these items were still pending when I left the company's employ.

Cross examination closed.

Deposition closed.

(Certificate of Notary omitted.)

Mr. May: If the Court please, the cross-examination in the deposition is not material at all—If the Court wants the record down.

The Court: I expect in this kind of a case I am making a record for the Circuit Court of Appeals, and if I didn't let it in, it could be put in as an offer to prove, so the thing to do is to let it in. I can't keep down the record. If counsel want to put things in that are relevant, they probably won't agree with you about it.

Mr. May: Well, we want to give the Court a chance to rule on it.

The Court: It would be in here as an offer to prove anyway.

Mr. Williams: We now offer in evidence these exhibits, Defendant's Exhibits 37, 38, 39, 40 and 41. These were the exhibits identified in the direct examination by Clutter. We offer in evidence two ledger sheets of the Keystone Driller Company, showing the account of the Clutter Contracting Company, beginning with an entry on September 9, 1924, and ending with—I guess the last entry is June 28, 1927.

Mr. May: We admit anything that they are liable to bring out on those exhibits.

The Court: Is that the Bernard Clutter account that involves these same shovels?

Mr. Williams: Yes.

Mr. May: There are a number of other items there, and if they will pick out any they want, that may help some. We would like permission to substitute photostatic copies, and keep the originals.

Mr. Williams: Yes, that may be done. We offer these as Defendant's Exhibits 93 and 94. I think it is admitted that these are ledger sheets of the Keystone Driller Company.

The Court: Yes, he has already said that that was their record.

Mr. Williams: And in explanation of the entries on this ledger sheet, I think it may be agreed, may it not, that in the credit column the letters "cs" means credit memorandum, and the letters "csh" means cash, and the letters "je" mean journal entry.

We also offer in evidence, and ask to be marked as Defendant's Exhibit 95 a copy, a carbon copy of the letter dated February 11, 1925, from the Keystone Driller Company to B. R. Clutter; and the next Exhibit No. 96, a duplicate original of the contract between the Keystone Company and Clutter for the purchase of the first Keystone excavator, the one on which there was to be a credit given.

The Court: Is that a conditional sales contract, or form of chattel mortgage?

Mr. Williams: No, it is in the form of a chattel mortgage.

Exhibit 97 is the invoice for that first machine.

Exhibit 98, unsigned agreement between B. R. Clutter and the Keystone Driller Company, identified by Clutter in his second deposition, as Plaintiff's Exhibit I.

The receipt from the Keystone Driller Company to Clutter for $500, dated April 14, 1925, marked Defendant's Exhibit 99.

Exhibit 100, also a receipt for $515, dated 5-23-25, from Clutter.

Next is the chattel mortgage on the first machine, from Clutter to Keystone on that first machine, No. 101.

Next is the carbon copy of a letter dated March 16, 1926, from the Keystone Driller Company credit manager to B. R. Clutter, Exhibit 102.

No. 103, carbon copy of a letter dated January 15, 1927, from the Keystone Driller Company credit manager to B. R. Clutter.

Exhibit 104 is an original letter from Clutter to Rex Downie, dated January 9, 1928.

Exhibit 105, a carbon copy of the letter dated January 18, 1928, from Keystone Driller Company to Clutter.

Next, Exhibit 106, original letter from Clutter to Rex Downie, dated February 6, 1928.

Next is carbon copy of a letter from the Keystone Driller Company by Downie, to Clutter, dated 2-16-28, Exhibit 107.

Exhibit 108, a canceled check from Keystone Driller Company to Clutter for $476.

Next Exhibit 109, original letter from Clutter to Downie, dated 11-15-28.

Exhibit 110 is an original letter from Clutter to Rex Downie, 11-28-28, a three-page letter.

Then 111 is a letter dated 11-13-28, which apparently should be 12-13-28, a three page letter from Clutter to Downie.

112 is original letter from George E. Wagner to J. V. Downie of the Keystone Driller Company, dated April 20, 1929.

Those Exhibits are now offered in evidence.

The Court: You know what is in this correspondence, do you, Mr. Richey?

Mr. Richey: Yes.

The Court: There is no use of reading all of them. What are those exhibits you introduced last?

Mr. Williams: I can briefly summarize them.

The Court: Just tell me what the exhibit numbers are.

Mr. Williams: Nos. 37, 38, 39, 40 and 41, and 93 to 112, inclusive.

Now I can tell you briefly, and would like to at this time, what these are. The ledger sheets, of course, show the account of Clutter with the Keystone Driller Company, showing the receipt of those two machines and credits, and various parts and charges for parts, etc. There is nothing on there showing anything about the credits referred to in these memoranda and letters. That I think is a significant thing, as we will argue in supporting Clutter, that this was a secret matter, which only he and Downie should know.

Now this Exhibit 95, a letter of February 11, 1925, from the Keystone Driller to Clutter. This was before this settlement was made. (Reads letter.)

Then they made their contract for the machine on the regular form and style, dated February 28, 1925, but had evidently not yet arrived at the agreement they were going to have made, and it was billed to him March 19 at $7740, with nothing on the invoice to indicate any credit of any sort. Then comes this contract which is not dated and unsigned, and which is evidently the only contract in writing that they had between them. It is acknowledged by Downie in the affidavit which he filed on the motion to produce as the contract made between

them, but it was not signed. In pencil on the top it is dated April 11, 1925, and reads as follows: (Reads contract.)

Then on April 14, 1925, there is a receipt by the Keystone Driller to Clutter for $500 in cash, and then another receipt for $515, cash payment applying on excavator as billed March 9, 1925, balance of settlement in the shape of seventeen promissory notes for $425, all dated April 14, 1925, and secured by chattel mortgage. (Reads affidavit.)

Downie says this is the contract.

The Court: What exhibit is that?

Mr. Williams: That is Exhibit 98. Then the letter of March 16, 1926, Keystone Driller writes Clutter telling him that the Bank has returned a note of his that they had sent for collection for four hundred and some dollars. On January 15, 1927, here is the first time there is any recognition by anybody other than Rex Downie that there is any credit due to anybody. This is a letter written by the credit manager, F. W. Ransom, apparently. (Reads letter.)

January 9, 1928, Exhibit 104, Clutter writes to Downie. (Reads letter.) On a page of it is a pencil memorandum, Downie's notation, 1904-contingent, final payment, and then there is written in pencil and crossed out "offer $500 instead of larger contingent payment."

Then the letter of Downie in reply to that, Exhibit 105, January 18, to Clutter (Reads letter).

Clutter replies to that under date of February 6, 1928, Exhibit 106. (Reads.)

Now Downie answers that under date of February 16, Exhibit 107. (Reads.)

And here is the canceled check for $476, which accompanied that letter, Exhibit 108.

Then the thing apparently dropped until November 15, 1928, when Clutter writes to Downie, Exhibit 109. (Reads letter.) And Downie writes him back December 3, Exhibit 38. (Reads letter.)

On November 28, then he comes back with a long letter, arguing his side of the case on the construction of the contract.

The Court: What is the outcome of it?

Mr. Williams: They argued back and forth between them, and the point of this whole thing is, without reading the letters, that both sides recognized that there was some sort of a memorandum in writing made.

The Court: Well, that is clear from one of the letters, and that is admitted, isn't it?

Mr. Williams: That is perfectly clear, and shows that they came to some sort of a deal, and apparently had reduced it to writing, but it was not signed. Clutter gave one reason, and Downie gave another reason, why it was not signed, and after the time the two years were up and the contingencies had not happened, and shortly thereafter the Keystone people took back the machine, and thereupon they had some argument, and they substituted or made a new deal whereby Clutter was to get cash of $1904 instead of the machine credit which he lost because he had to give up the machine, and then they wrangled back and forth on what that $1904 meant, when they were to get it, and how, and Clutter claims that they cut it in half, and then cut it in half again, and it was postponed, but the main point is that they made such a deal at one time on this machine, and, as we say, for the suppression of evidence dealing with this.

The Court: The crux of the whole thing is whether Defendant's Exhibit 98 was made, and what the effect of it, if it was.

Mr. Williams: And the subsequent conduct under it, and their subsequent understanding of the deal under it.

And when we come to consider that contract—Well, I don't want to argue the case now; I just want to state the facts. I think there is only this one letter that Mr. May seems to want me to read.

The Court: Is that the one you think is important?

Mr. Williams: No, this is the letter from Downie to Clutter, in reply to this three-page argument of Clutter, as to what he is entitled to. (Reads letter.)

There was a charge in the deposition apparently that Clutter sent his brother to Wagner and Downie, to apparently see if he could not blackmail them or blackjack them or something, into paying more money.

The Court: Who did this?

Mr. Williams: That is B. C., Bern's brother was supposed to have gone to Downie, I think the charge is, to see if they couldn't have him, blackmail him out of some more money. They were interested in the Star Drilling Company, which was threatened with infringement by the plaintiff, and according to their claim it was apparently a hold-up proposition, and according to Clutter's claim simply a thing they were trying to get out of

themselves, an infringement case. He doubtless had told them about this Joplin, Missouri, experiment, and this letter from Wagner is denying any such intention.

The Court: Well, give me those key letters, and I will read them myself. Is this all the testimony you have on this line now?

Mr. Corbett: Yes.

Mr. Richey: Are you going to put in those Rood depositions?

Mr. Corbett: No.

The Court: Has any affidavit ever been produced as to the abandonment of this experiment?

Mr. Richey: We produced it and submitted it to the other side. They have not offered it in evidence. It is among these papers that such a hullabaloo was made about, and we brought it up and submitted to them.

Mr. Corbett: When was it submitted?

Mr. Richey: At the trial here, in the envelope of papers—still in there, I think.

Mr. Williams: I thought you had put that in.

Mr. Richey: No, sir.

The Court: Well, I will put it in as the Court's exhibit.

Mr. Williams: I don't care whether it is in, only I don't want to vouch for it, is all.

Mr. Richey: I thought you wanted to vouch for Clutter.

Mr. Williams: Well, you vouched for Downie.

Mr. Richey: Yes, sir, but not for Clutter.

Mr. May: We offer as Plaintiff's Exhibits P-45 and P-46 letters from Keystone Driller Company to G. E. Wagner and B. C. Clutter.

The Court: Are 45 and 46 the same?

Mr. Richey: Yes, sir.

The Court: Do you want them in twice?

Mr. Richey: Well, they are addressed to different people.

Mr. Williams: Mr. May produces this affidavit of Clutter, dated April 16, 1925. It is not material to our case, but if the Court wants it in, there it is.

The Court: I think it should be in.

(Affidavit marked Defendant's Exhibit 113.)

Mr. Richey: Does that close your case?

Mr. Corbett: I think so.

Mr. Mahoney: We want to put in some more of these charts when we get a chance, and also if we have missed any of these depositions.

Mr. Williams: All depositions are now offered, if they have not been before.

The Court: All right.

Mr. Williams: And all exhibits that were marked as exhibits are now offered, if not offered before.

Mr. Richey: We offer in evidence those two photographs that were marked for identification as Exhibits 42 and 43. I now offer them in evidence as Plaintiff's Exhibits P-42 and P-43.

Mr. Corbett: We would like to preserve an objection until we see what they are.

The Court: All right. They are admitted, and if you have any objections, you can present them later.

Mr. Richey: Is your case closed?

Mr. Corbett: Yes.

PLAINTIFF'S REBUTTAL TESTIMONY.

ORLEY D. HANSHEW, a witness called by the Plaintiff, being first duly sworn, testified as follows:

DIRECT EXAMINATION by Mr. Siggers.

(Narrative continued.) My name is Orley B. Hanshew. I am 48 years of age. I am a salesman for the Keystone Driller Co. I live in Beaver Falls, Pennsylvania. I think I testified in the suit in Cleveland against the Byers Machine Company brought by the Keystone Driller Company. I have a recollection of testifying in that suit as to the use of the ditcher scoop in 1914. This ditcher scoop was what they call the Clutter type ditcher bucket. I have refreshed my recollection as to the time when this use took place. In 1927 I went over the job and refreshed my memory. This first use of the ditcher scoop was in the spring of 1914 at Conway, Pa. I helped Mr. Clutter and my fireman install it on the machine after Mr. Markley had bought it. Mr. Markley was a contractor who owned the machine and for whom I worked for. I began working for Mr. Markley along in March, 1914, I believe, about the first of the month. Before I went to work for Mr. Markley I worked for the Crucible Steel Company, at Midland. I ceased working for this company in the latter part of February, 1914. When I worked for Mr. Markley I operated the Keystone shovel which he owned. When I first went to work for Mr. Markley the shovel was not complete; it was probably a week or so after I hired out before the shovel was completed. When I first went to work for Mr. Markley we did street work, grading with a skimmer bucket. The manufacturer of this skimmer bucket was the Keystone Driller Company. The first street we graded with that skimmer bucket was in Rochester, and from there we went to Conway, Pennsylvania. The job at Conway was a street and sewer job; grading the street and digging the sewer trench; laying the trench and paving the street. The time that I operated the skimmer scoop in Conway, Pennsylvania was in the early spring of 1914. After the skimming work was done on this street we used the same shovel, only with a ditcher attachment put on for sewer work. The ditcher attachment was a bucket with a stick attached on to the end of the boom. It had a pulling-in motion. I helped to make the change from the skimmer scoop to the inward moving ditcher scoop. I was as-

sisted in this work by Leroy Clutter and Charlie Eppers. Clutter's name was Leroy P. Clutter. Mr. Eppers was fireman on the shovel. He worked with me on this job after the change was made from the skimmer to the ditcher scoop. Part of this trench we had dug by hand while we were grading the street and then we started where they left off by hand digging, and I imagine the ditch was in that particular spot nine or ten feet deep. And after we were almost down to the finish we struck a small amount of shale. It was not so exceptionally large; just ordinary shale. When I said some of the work was started by hand I was referring to the ditch. The work was continued by the shovel, that is, the inwardly digging shovel that I have been referring to. This was the one that Mr. Clutter assisted in having put on the end of the boom. This inwardly digging shovel had two power actuated lines that were employed to operate it. Describing these lines and their functions, the boom line came off the drums and out through a sheave at the end of the boom, and back up to connect to the arms on the swing circle; and the other one ran down through the A-frame and down through the boom on an idling sheave and attached on the bail of the bucket. The bucket was hinged on the lower end of the stick; it had a slide latch on the stick. The latch was controlled by a trip line there, but I did not consider it a power line. To operate this ditcher stick in the digging cycle there were two power lines used, and another hand actuated line for tripping the latch. This permitted the bucket to move downwardly by gravity to dump the load.

Mr. Corbett: Your Honor, I think this witness ought to tell these things instead of being led at every step.

The Court: This is just a summary of what he had said so far.

Mr. Corbett: He did not say anything about a cycle at all.

The Court: That is implied from what he said.

Mr. Corbett: Objection to this on the ground it is leading; exception.

(Conference about court and counsel about photographs.)

The Court: This work is a forerunner of the Clutter patent?

Mr. Richey: Yes, to carry that date back of the alleged Vincennes use of the Mahoney Machine.

Mr. Corbett: He has a statement of a series of facts. If he is going to testify about operations, he ought to testify without having this statement of facts in his hands.

The Court: Some of these facts he has not covered in his testimony?

Mr. Corbett: No, Your Honor, he has not covered them in his testimony.

The Court: Ask him questions first; ask him facts on the photographs.

(Narrative continued.) Referring to the power-actuated hoistline connected by means of links to the boom, the stick is connected to the connecting bars on the end of the boom; at the top of the stick another pin for the connecting bars to go back to the sheave stem, and two vertical pieces of iron there goes from the boom up to the sheave. These two pieces of iron were pivoted on the end of the stick.

Q. I am speaking of the two pieces of iron that extended from the boom to the sheave? A. They work back and forth as your stick oscillates there. They are fixed in a vertical position this way, but they can go either back or forward. The stick goes in and out.

Q. That is, the two pieces of iron which connected the sheave to the boom were pivoted to swing in the plane of the boom, is that correct? A. Yes, sir.

Q. How about the links which connected the pivot axis of the sheave with the top of the ditcher stick? Were they pivoted to the ditcher stick or fixed? A. They are fastened on a pin that goes through the top of the stick and back to the pin that goes through the sheave.

Q. Was that pin connection a pivoted connection or a fixed connection? A. I don't know whether you could call it a pivoted or fixed connection. The distance between those two pins never changed, but the connecting bar works on the pin in the stick and also on the pin to the sheave.

Q. What was the effect of applying power to haul in this hoisting line? A. To pull your bucket into the dirt, you mean?

Q. I am talking about the hoisting line not the hauling line? A. It starts your drum in operation to wind up your line; as you wind up your line it naturally raises your boom higher; as you slack off and release that it goes back.

Q. What happened when the boom was hoisted by the hoisting line? A. That raises the boom up, takes it off the ground or raises it or lowers it into the ditch.

Q. Is there anything raised besides the boom? A. Your bucket and stick will naturally go with the boom.

Q. Were the bucket and stick so suspended as to maintain a plumb position or did they have movement when the boom was hoisted? A. If you raised your boom line and not engaged your closing line, your stick and bucket would naturally stick out like this, until you got to a certain height, and then the weight of the bucket would drop down to a certain degree.

(Narrative continued.) That is to say, if the hauling line were slacked off, and if the hoisting line was pulled in, the stick and scoop would be extended outwardly with that machine which I operated. When power was applied on your bucket line this would bring your bucket in on instroke; that is, towards the machine. The work done by this machine at that time if I recall rightly was possibly two and one-half, maybe three squares. This work was all done on one street, Second Street. This machine dug the ditch very successfully at that time. We encountered a small amount of shale; not a great deal. We could not pull directly through; we could scrape at it and get through it. The scoop on the lower end of the ditcher stick was armed with digging teeth. We dug this bucket through the shale and by the bucket and the boom falling in the ditch had a tendency to kick out pieces of shale, which helped us some. The nature of the power unit on this machine was a single cylinder steam engine vertical type. The hoisting and hauling lines were controlled with two levers on the drum. One lever for each line. I don't remember the actual depth of the ditch at that time. The deepest part of it was possibly nine feet or maybe ten feet. The machine was successful in digging those two or three blocks of trench which I have testified about.

The Court: Do you want him to identify these photographs?

Mr. Siggers: Yes, I do. I will come to that.

The Court: I assume Mr. Corbett is objecting to these things on the corner.

Mr. Corbett: I am objecting to the group that has a series of statements here. That was not the group. We object to that statement on there until it is proven.

Mr. Siggers: These were the ones in the Cleveland suit. This is exactly the way the exhibit was. We did not want to destroy the exhibit.

The Court: He is objecting, and I think properly so, to the legend at the corner of these photographs here.

Mr. Corbett: I wish your Honor would look at those statements there; that is the thing I object to most strongly, to hand the witness those papers and ask him to testify to it, whether it was in the Cleveland suit or not.

The Court: He has proved now that this man thinks this work was done in the spring of 1914.

Mr. Siggers: You see, Mr. Corbett, these legends here are not on these, and these are the ones introduced in evidence.

Mr. Corbett: I object to handing these to the witness, with signed statements of witnesses we have not examined, and telling him what the dates are.

The Court: I don't see why you should mutilate those. You can tuck the corners back or stipulate that the corners of the exhibits are not offered in evidence, the legends. No one has a right to complain about that.

Q. I hand you a group of four photographs, stapled together, and I will ask you to state whether or not you have ever seen them before?

The Court: Seen the photographs?

Mr. Siggers: Those identical photographs, yes, sir.

Witness: Yes, I have seen them.

Q. Did you testify in the Cleveland suit about those photographs? A. Yes, sir.

Q. Are you able to state whether or not you appear in those photographs? A. Yes, sir.

Q. Will you point out to the court? A. The operator there.

Q. Will you compare this machine with the machine you operated in the spring of 1914? A. That is the same machine.

Q. Are you able to state positively it is? A. Yes, I know it is.

Q. Are you able to fix the date of this machine more definitely than you have heretofore? A. No, sir, not any more definitely. It was in the early spring.

Q. Do you know what month it was? A. I imagine it was in April.

(Narrative continued.) I think to fix this date more definitely we have some record of the checks that were used in the payment for that work. The records I am referring to are the records of the Borough of Conway, Pennsylvania. Those are the records I am speaking of, the cancelled checks we have.

Q. I hand you a group of four photographs and will ask you to state whether you have ever seen those before or not? A. Yes, sir.

Q. Can you identify them more definitely, stating what they are? A. Those are the records of the work done there.

Mr. Williams: Just a moment. Have they been offered yet?

Mr. Siggers: No, it has not been offered yet.

Mr. Williams: He did not make that record.

Q. Were you present when these photographs were taken? A. I don't think I was present when the photographs were taken, but I was with Mr. Cullen when he got that.

Q. Who was Mr. Cullen? A. He was secretary on the council at that time.

Mr. Siggers: Your Honor, these first four photographs are to be stipulated in the record.

Mr. Williams: That is, I agreed with Mr. May that the certified copy of the record of the Borough Conway would be admissible; but not the checks; they are not part of the record.

Mr. Siggers: That is the first four photographs; and it is agreed that these are exact reproductions of the minutes of certain meetings of the Borough Council.

Mr. Williams: No. You have a certification here, certified by the Clerk of the Borough Council; and we said he would make no objection simply because of the fact that the record was photographed—a part of the record—not the complete record; we would not object to the certification of the record itself or that part of the record; but we did not concede or admit that the certification covered photographs of certain checks attached to it. That is not part of the record. It is not assumed to be.

Mr. May: You mean not a complete copy of the minutes, but complete so far as this matter is concerned.

Mr. Williams: In other words, we are not objecting to the character of the certification of that part of the

record that is present, the record of the Borough of Conway.

Mr. Siggers: You agree also that these are correct reproductions of those minutes?

Mr. Williams: We do not agree to anything. We are not objecting to that certification.

Mr. Siggers: Are you not stipulating?

Mr. Williams: No.

The Court: What do the minutes purport to show?

Mr. Siggers: They purport to show the approval of this sewer and ditching job at Conway, Pennsylvania, in April, May and June of 1914.

Mr. Williams: In order that Your Honor may understand what the controversy seems to be, I will show you: this is simply a photograph of four pages of the Borough record.

The Court: Yes.

Mr. Williams: It begins anywhere and stops anywhere. We will not make any objection that it is not a complete record; we will take the certification as a correct record of those minutes of those pages. But we say we do not concede that the certification can cover those checks because they are no part of the record. Somebody just made a copy of some photographs with some checks.

The Court: I don't think they will need the checks.

Mr. Siggers: I can remove those.

Mr. May: Mr. Williams first thought he would let them go in on the statement of the photographer who took them. Then he concluded he would not.

The Court: We are not interested in fixing the date of the final estimate.

Mr. Siggers: I offer in evidence as Plaintiff's Exhibit P-47 the four photographs mentioned, together with the attached certificate of Harry P. Cullen, dated June 2, 1927.

The Court: All right. They will be received.

Mr. Williams: If the Court please, it still has those checks attached.

Mr. Siggers: I am going to disattach them as soon as possible.

Mr. Williams: Oh, all right.

(Narrative continued.) I think the day we finished the grading with the skimmer bucket we received the ditcher bucket. I don't remember how long it took us to do the skimming. We covered three or four blocks in the

skimming work, about three blocks I think. I don't exactly remember the exact number of days it took. I would judge it took around in the neighborhood of ten days or two weeks, because at that time of the year you would have more or less bad weather. It must have been along the forepart of April some time when I began the skimming job; I don't remember just definitely the day; I did not keep a record of the dates we started or the dates we finished. After the skimming job was done we started on the ditching. We used the same machine only with the ditcher attachment instead of the skimmer. I worked on that machine possibly a year, a little over a year. After that I did various jobs, and then I went to work for the Keystone Driller Company. After we had finished with this machine on Second Avenue in Conway, Pennsylvania, I think we back-filled the principal part of the sewer ditch, and some cleaning up on the streets. From there we went to Midland. I think the Midland job possibly was the last job we did with the machine—I did any way. After the Conway job we did not continue to use the ditching attachment, I did not have any sewer job when I ran that machine after that job was done. After that Mr. Markley used it for some time and then he sold it. I don't know the man's name. He sold it to some Italian up in Portland, Maine. I saw it in Portland, Maine in '22. I don't remember the contractor's name. It was still in use in 1922.

Q. Referring to the first photographs about which you have testified, are you able to identify the people in that photograph besides yourself? A. Yes, sir. The man in front here is Mr. R. M. Downie. The man directly behind him is Leroy Clutter. Myself on the platform. The fellow leaning on the coal box is the fireman, Charley Eppers.

Q. In the second photograph, please identify the people? A. Mr. Downie and myself seems to be all that shows in that picture.

Q. The third photograph? A. That is me on the platform; the fireman is leaning over the back platform putting in some coal; and I don't know who this fellow is—just somebody looking on.

Q. The fourth photograph? A. It is Mr. Downie right back of the brick pile; myself on the operator's platform; and the fireman standing at the back end of the machine.

Q. You referred to Mr. Downie in three of these four pictures, which Mr. Downie was that? A. It is Mr. R. M. Downie.

Q. What relation was he to Rex Downie who testified in this suit? A. Rex Downie's father.

Q. Was R. M. Downie connected with the Keystone Driller Company? A. He was the originator of the Keystone Driller Company; also general manager.

Q. What interest did Mr. Leroy Clutter have in that machine? A. He was working for the Keystone Driller Company.

Mr. Corbett: We doubt if this witness is qualified to say that. He was not even employed by the Keystone Driller Company. Objection to that.

The Court: I don't know whether this witness was or not.

Mr. Corbett: He was not employed by the Keystone Driller Company.

The Court: I know that you are employed by the Osgood Company. You will have to test that on cross examination. If it develops he is guessing at it or it is hearsay, the court will rule it out.

Mr. Siggers: I offer in evidence the four photographs concerning which the witness has testified. But I will remove those statements.

Mr. Williams: There are several things we object to on that, I think.

Mr. Siggers: We cannot remove it.

Mr. Corbett: We can object to it, though.

Mr. Richey: We just asked him what is on the photographs.

The Court: I understand you want to leave it intact as it was in the Cleveland suit.

Mr. Siggers: Yes, except that we are willing to take off those typewritten statements. We cannot possibly remove that writing.

Mr. Williams: That is your fault.

Mr. Siggers: That is the witness right here. I will ask him to read that into the record.

Mr. Corbett: We think it is a very simple matter to put in these photographs without this matter of the Cleveland suit.

The Court: On the other hand he can offer the photographs with the understanding that the writing on the back is not offered. The record may show that the writing on the back of these photographs is not offered in

evidence, and is not in evidence; unless you put it in by cross examination.

Q. Have you ever gone back to Second Street in Conway, Pennsylvania, revisiting the site or location where this work was done, in order to refresh your recollection? A. I did, in 1927.

Q. Can you fix the date more definitely?

The Court: The date when he went back there?

Mr. Siggers: When he went back to this place where this sewer work was done by the Clutter type machine.

A. I cannot give you the exact date on that. I know it was in the summertime.

(Narrative continued.) I don't remember whether it was before or after I testified in the Cleveland suit against the Byers Machine Company. I did not have these four photographs with me when I revisited the site of this work. I recognize the neighborhood, that looks like Second Street in Conway. I am able to state positively that these photographs show the machine which was used to dig the ditch of two and one-half or three blocks along Second Street in the Spring of 1914. I do not remember when these photographs were made. They were photographs taken at various times on the job there. The piles of brick shown in the foreground of each of these photographs were used for paving that street. Some of these bricks were piled up there before we started ditching. They were all there during the ditching and would be there until the street was completed and ready to put the brick down. The tile shown in the first, second and fourth photographs were for the sewer there. They were used for the sewer, putting in that trench we were digging there with the machine.

Mr. Siggers: I offer in evidence the four photographs about which the witness has testified, without the typewritten notes, and without the written notes on the back of the first photograph; and I will ask that they be marked Plaintiff's Exhibit P-48.

The Court: They may be received.

Mr. Williams: Note our objection and exception to the admission of the photographs by reason of the memoranda and legends written on them or printed on them.

Mr. Siggers: What legends?

Mr. Williams: On the face and on the back of the pictures.

Mr. Siggers: What legends are you talking about, anything on the face of that one.

Mr. Williams: Not on the face of number one, no; on the back of number one; on the face of number two.

The Court: They are not offered. They are not in evidence.

Mr. Siggers: How about No. 3, do you object to that?

Mr. Williams: I have just stated what I object to.

Mr. Siggers: You do not object to number 3, then?

Mr. Williams: Also, I don't think they have been sufficiently proven.

The Court: It will be received and objections noted. It is the understanding of the court that nothing is offered except the photographs.

Q. Referring to the back of the first photograph, do you recognize the handwriting of the notation there; if so, state whose it is?

Mr. Corbett: I don't believe it is admissible under any circumstances in this case. He has testified to the facts.

Mr. Richey: The only thing is that is all of that date; that was three or four years ago; and I think it is a memorandum from which he can refresh his recollection.

The Court: He has already testified; he does not need to refresh his recollection. It may be admissible by the time we get through the cross examination.

(Narrative continued.) After I went to work with the Keystone Driller Company in 1915 I continued to work with the same type of machine as shown in these photographs, Plaintiff's Exhibit P-48. The first machine I demonstrated was practically the same as the machine shown in that Exhibit. I continued to demonstrate this type of machine as long as that type was built; and then when they changed their design and improved them I demonstrated that. I can not state anything about when there was a change in designs because I was not working in the engineering department. I did not sell machines at that time I was demonstrating.

The Court: You were an operator and a demonstrator?

A. Yes, sir.

(Narrative continued.) I am a salesman at the present time. Referring to the first, second and fourth

photographs of Plaintiff's Exhibit P-48, the two links connecting the sheave on the top of the boom at the upper end of the stick were bent from hitting on the edges of those connecting bars, that the stick connect on to the boom. I believe they also call them extension irons. This contact could take place most any time in the operation of the machine; more so when the bucket was in close to the boom on the inward motion. The reason they bent was from continued hitting there. Possibly if you pull your bucket clear through until your bail hit your boom probably you would have bent it in one stroke. If you were the least bit careful about it, you would not hit it so hard; it would take some time to bend it by hitting it lightly. No one besides myself operated this machine. I don't suppose the machine was used over a day or so before these bars became bent in this manner. You understand me correctly that this bending took place when the scoop was drawn in close to the boom.

Q. Was this bending of the links regarded as an accident?

Mr. Corbett: Objection to that, Your Honor. He is not competent to say whether it was regarded as an accident. It might have been designed for that purpose.

The Court: Ask him how it happened.

Q. How did that happen? A. From hitting, pulling the bucket in to the extreme pull-inward stroke.

The Court: Was that pulling-in to that extent done deliberately or was it inadvertent because of lack of control? A. No, sir. If you got a full sweep of the stick there, you would naturally come clear up to the top of the bank, and that would bring the bail in against your boom; taking that full stroke there you naturally would bend that because it hit out there before your arc was completed to the extreme.

(Narrative continued.) Referring to Defendant's Exhibit 35, I am able to identify the drawings in that Exhibit, that seems to be the stick, connecting bars, pin, teeth, latch slide bearings, the back of your bucket, that is, the drop bottom dump bucket we have been talking about. The Clutter type bucket I suppose you would call it. Examining this [illegible] it seems to be correct as used by me on that first [illegible] I would say that the striking of the links connecting the sheave with

the upper end of the ditcher stick against the extension irons was not an advantage at all and I would say that it was not any disadvantage.

Mr. Siggers: That is all.

Cross Examination by Mr. Corbett.

(Narrative continued.) The machine shown in Plaintiff's Exhibit P-48, does not show the usual dumping position of the device; it would be pretty hard to get at a usual dumping position. I think that was one of the dumping positions; it seems to be out far enough to let all of the dirt out of it. To operate this device you start your digging operation by throwing that bucket out a little farther than it is, to get down to your ditching. I am referring to the first photograph, you get out a little further than that, when you start your digging; engage your hauling line and pulling back through the dirt; by the time you got your bucket full, swing it to the side and dump it. To dump it there is a line on there. You pull this latch lever over here, either that way or cast it clear out. Sometimes it would go out with the bucket latched, and sometimes it would unlatch it. You can do it either way. To close the bucket ordinarily you drop it back in the ditch and automatically when it hits the bottom of the ditch it would go shut. You could also close it with your hauling line—snap it like that—and pull it up with the hauling line. This device had small side rake teeth that show there and stick out in that position. The fireman tipped the bucket the most of the time. It did not take all of his time to fire. Sometimes he had a water boy do it. We usually had a man on the ground to trip the bucket; if you did not have a man on the ground you could kick it out yourself. By this I mean you could let go of the hauling line and it would kick out far enough to dump itself, without tripping the bucket at all. If you tripped continuously you would have to have a man on the ground to trip the bucket with that type of machine. I hired out to S. B. Markley about the first of March, either a day or two after the first of March. I testified in the Byers suit that I went there in the early part of April. I meant on this job. I was on the payroll before that time. The first job we did was a skimmer job, that was down in Rochester, Pa. This job took us a couple of days. We stayed in Rochester just for that job and then we went to Conway. I think we went direct to Con-

way from Rochester. We took the skimmer scoop machine with us. I suppose we used the skimmer scoop machine in Conway possibly a week or ten days. We were grading the street there, with the skimmer scoop. We used the ditcher after we finished with the skimmer scoop at Conway. We went to Conway in April. It must have been the forepart of April because we did the street grading before we started. After that, we dug the trench two and one-half or three squares long. I don't remember exactly how long it took us to do that. Possibly it would take us a week or ten days; maybe two weeks; it depends upon the weather a lot. This ditch must have been for eighteen inch pipe; we probably had a twenty inch or twenty-four inch trench. I don't know what the average depth was; some places it ran eight, nine, possibly ten feet. We completed the digging of that trench with this ditcher. I cannot estimate what the actual distance was no closer than I gave you. I don't know what distance these blocks ran. After this trench was dug I went with the machine to Midland. In Midland we used the skimmer scoop. We used this skimmer scoop from that time on up until I finished that job down there, and when we finished that job down there we had no other work and I went with the Keystone. This job at Midland was an extension to Midland Avenue. I went to work for the Keystone the first of March, 1915, around that time. We did not have the ditcher attachment with us when we went to Midland, we did not take it to Midland; we had no use for it at Midland. The ditcher attachment was kept by Mr. Markley up there at his warehouse in Rochester for a long time.

Mr. Corbett: That is all.

Mr. Siggers: That is all.

Paul Sessions, a witness called by the Plaintiff in rebuttal, being first duly sworn, testified as follows:

Direct Examination by Mr. Richey.

(Narrative continued.) My name is Paul Sessions. I live in Cleveland, Ohio, and I am employed by the firm of Richey & Watts of counsel for the Plaintiff in this case. On Friday the 6th day of March, 1931, I went to Akron to watch the operation of one of the Keystone No. 4 machines. I know it was a number 4 because there was a label on one side, a large "Keystone 4." When I saw

the machine it was excavating on a sewer job on a side hill sewer excavation. It had gone through a layer of top soil and was down in a layer of sandstone. I took moving pictures of the machine operating there and I brought them with me. I will exhibit them.

Thereupon, a film of moving pictures was shown, during which the following comments occurred:

Witness: This is just a general view of the machine working. Here is a close-up view of it going into the excavation as they are getting down in the sandstone stratum.

Q. How thick was that sandstone? A. I should judge probably a couple of feet thick.

Witness: There is the impact of the teeth against the stone. This shows the excavation down here. This is a view down in front of the machine, down in the excavation. Here is the excavation. Here is the stick and boom up above.

Q. Is that a commercial job they were working on? A. It was.

Q. Do you know the name of the contractor? A. A Youngstown contractor. I have the name. I can't recall it right now.

Witness: There is another close-up going down in the rock, showing the impact and the breaking into the rock.

Q. Were those parts broken by the machine? A. Yes, sir.

Witness: You can see the "Keystone 4" on the cab of the machine. This is a closer view of the bucket striking the rock and breaking it. This shows it being drawn back and removed from the excavation. This shows the bucket striking the side.

Q. What are those marks? A. Those are the marks of the teeth.

The Court: What is that trench for?

A. A sewer excavation.

Q. What was the condition of the trench, wet or dry? A. The soil was not particularly dry; it was not wet; it was moist.

Witness: This shows it digging into the rock.

The Court: Do you care to ask him any questions, Mr. Corbett.

Mr. Corbett: Where was this job?

A. It was between Akron and Cuyahoga Falls.

Mr. Corbett: Could you locate it more definitely?

A. It was on the street which extends from Cuyahoga Falls.

Mr. Corbett: Who was the contractor?

A. I have that. Frank George, of Youngstown, Ohio, was the contractor.

Mr. Corbett: What road did you say?

A. Front Street.

Mr. Corbett: Right in Akron?

A. No, sir, I would say a mile south of Cuyahoga Falls.

Mr. Richey: Did you bring some specimens of the stone?

A. I did.

Mr. Richey: Will you produce them?

(Witness does.)

Mr. Richey: I offer the film in evidence as Plaintiff's Exhibit P-49.

Mr. Corbett: We want to object to it.

The Court: Let us have the objections later.

Thereupon a second film was shown, with the following comments:

Mr. Richey: Let the record show we are now showing a film of the demonstration made of the plaintiff's machine on the first day of the trial.

Mr. Corbett: Indicate what model that is.

Mr. Richey: The record shows what model it is.

Mr. Corbett: You mean at the Sam Davis Coal Yard?

Mr. Richey: The Sam Davis Coal Yard, the second day of the trial, March 4.

Mr. Richey: Those were undercutting strokes. I offer that film in evidence as Plaintiff's Exhibit P-50.

Mr. Corbett: Objected to as being immaterial and having no value.

Mr. Richey: These stones the witness Sessions produced I offer in evidence as Plaintiff's Exhibits Nos. P-51 and P-52.

Mr. Corbett: I object to the introduction of these films. We were not present at that demonstration. It is merely an ex parte proceeding at best and has no weight.

Mr. Richey: That is all the direct examination.

Mr. Corbett: No cross examination.

The Court: The exhibits will be admitted and exceptions saved.

Mr. Corbett: Note an exception.

Mr. Richey: I would like to ask him one more question. Mr. Sessions, these marks on these stones, what are they?

A. Those are the marks of the teeth on the scoop.

Q. On the ditcher machine? A. On the ditcher machine.

E. M. Morrison, a witness called by Plaintiff in rebuttal, being first duly sworn, testified as follows:

Direct Examination by Mr. Edgerton.

I own and operate my own machine. It is a Keystone 4, 1926. I keep a pretty close check on maintenance and use it a lot of times in figuring on jobs. I will say it takes anywhere's from three to four dollars a day on repairs, cables, and up-keep. Twelve dollars a day would be an unreasonable amount of upkeep for me on the Keystone Machine. An operator of a Keystone Machine only undercuts where he needs it; any place where it is necessary, he does it; the majority of them I have seen. I don't believe an operator could hold a job if he could not undercut with this machine, the way the things are now; there are too many men—

Mr. Corbett: Objection to that, his opinion whether an operator could hold a job or not; it is leading; he is merely giving his opinion.

The Court: I guess that is objectionable. He is not qualified to answer that.

(Narrative continued.) I know what a blind spot is on a Keystone Machine.

Q. Do the other operators who work with you know about it? A. They must.

Mr. Corbett: Objection. He does not know what the other operators know.

The Court: Unless he knows from what they said and what they have not said.

Question read.

A. Why sure.

(Narrative continued.) I attended the demonstration on March 11th out at the Sam Davis Coal Yard, demonstrating the Keystone Machine. I also attended the demonstration on March 4th where the Keystone demonstration was made.

Q. I now hand you five photographs, marked A, B, C, D, and E, and ask you to state if these illustrate the type of material, the types of soil that you have encountered or seen at various times in your experience in excavating?

Mr. Corbett: Are we going to have a chance to find where these places are that these photographs show?

Mr. Richey: You may cross examine.

The Court: Have you got them marked with exhibit numbers?

Mr. Edgerton: Not yet. I was going to offer them.

The Court: You had better mark them so that the record will be clear.

Witness: Yes, I have seen machines work in stuff of that type lots of times, and I have worked in it.

Q. What kind of machines have you seen working in soil of this type, Mr. Morrison? A. I have seen the Keystone and other machines at it.

Q. The inward arc? A. The inward arc.

Mr. Edgerton: The photographs just examined by the witness are now offered in evidence as Plaintiff's Exhibits Nos. P-53, P-54, P-55, P-56 and P-57.

The Court: Merely to illustrate the types of soil in which these machines will work?

Mr. Edgerton: Yes, Your Honor, that is the only purpose of them.

The Court: All right. They will be received.

Mr. Edgerton: You may have the witness.

Mr. Corbett: There is no cross examination.

Howard H. Elmire, a witness called by the Plaintiff in rebuttal, being first duly sworn, testified as follows:

Direct Examination by Mr. Edgerton.

(Narrative continued.) I have seen Mr. Green who testified in this case previously undercutting with a Keystone machine in the Bronx, New York.

The Court: Which is Mr. Green, the last "juror" there?

Mr. Edgerton: Yes.

The Court: I remember him now.

(Narrative continued.) I have seen other operators of Keystone Machines undercutting from time to time and throughout the section of the country in the east where Mr. Green has testified that he operated. The abutments operate to avoid the blind spot in the Keystone Machine. I have seen many Clutter machines in operation. They did not have wooden blocks in the latch slide, such as the slide 16-A in the Plaintiff's Exhibit P-1 —that is the Clutter patent (patent shown witness)—in the slide in the part 16-A; to prevent the latch from operating. I never saw any in there for any purpose. I attended the demonstrations of the Keystone and Osgood Machine at the Sam Davis Coal Yard, March 4th and 11th, respectively. I have a copy of the memorandum of April 11, 1925, referred to in the Clutter deposition.

The Court: The Clutter deposition read this afternoon?

Mr. Edgerton: Read this afternoon, Your Honor.

Mr. Richey: What was that exhibit number, the contract offered in evidence?

Mr. Williams: Defendants' 98.

The Court: I have a copy.

Mr. May: This is for the purpose of contradicting Mr. Clutter's deposition.

Witness: Yes, I have a copy.

The Court: You mean you have a copy here with you?

A. I have it here.

Q. Where did you get this copy, Mr. Elmire? A. Mr. Bernard R. Clutter gave it to me.

Q. Where has it been ever since he gave it to you? A. I took it home when he gave it to me and took it up and put it in my safe deposit box where I keep all my other papers, in the bank.

Q. Where is that and where has that been kept? A. In Arlington, New Jersey; and it was kept in the First National Bank & Trust Company, at Arlington, New Jersey.

Q. Were you present when the affidavit No. 113 was signed by Mr. Bernard Clutter? A. Yes, sir.

Q. You saw him sign it? A. Yes, sir.

Q. You saw and heard him take the oath? A. Yes, sir.

The Court: Who else was present?

A. Mr. Downie.

The Court: Rex Downie?

A. Rex Downie.

The Court: And the notary public?

A. And the notary public.

The Court: Who was the notary?

A. A man by the name of Birch.

The Court: Where did you get him?

A. At Tom's River, New Jersey.

The Court: How far is that from Bernard R. Clutter's home?

A. About ten or fifteen miles.

The Court: You took him about ten or fifteen miles, did you?

A. We were down on the road job where he was working between Lakewood and Atlantic City, and where he was working it was below Tom's River; and we come up and stopped at Tom's River at this notary.

The Court: That is, he worked at other things besides being a notary?

A. He was a notary connected with a garage where they issued—

The Court: Chattel mortgages?

A. Automobile licenses and the like of that.

The Court: Is he living, do you know?

A. I could not say now.

The Court: You never saw him since then?

A. No, sir.

Q. What did Bernard Clutter say to you when he gave you the agreement to keep? A. Mr. Clutter gave it to me and said he would give me this copy of this memorandum to hold as a referee; that he could see it or Mr. Downie could see it any time that either one of them wished to see it.

The Court: You were on friendly terms with Bernard R. Clutter, were you not?

A. Yes, sir.

The Court: He never signed that, did he?

A. No, sir.

The Court: But this affidavit was signed?

A. Yes, sir.

The Court: Was there anything said about why it was not signed?

A. The memorandum?

The Court: Yes, anything said by anybody why it was not signed, or was anything said about signing it or not signing it?

A. It was said no need of signing this, that the affidavit, Mr. Clutter said that would be enough to show that he abandoned the experiment.

The Court: Had somebody asked him to sign the agreement? How did it come about he did not sign it?

A. We were talking it over about if signing this or not, this agreement.

The Court: Did the notary hear all this too?

A. No, sir.

The Court: Where was he?

A. The talking over of this on this memorandum was in Lakewood.

The Court: Was not the notary present there?

A. Not on this here when we were talking about this.

Q. You know Mr. F. W. Ransome? A. Yes, sir.

Q. Do you know where he went when he left the Keystone Driller? A. He went to the Star Drilling Machine Company, Akron, Ohio.

Q. Was that immediately after he left? A. Yes, sir.

Q. Do you know how long he remained with the Star Drilling Company? A. One year.

Mr. Edgerton: Your Honor, I want to ask if you have in your mind Mr. Elmire's statement as to the meeting when Mr. Elmire was present and the time when they were with the notary?

The Court: No, I have not the sequence of events. I thought I would rather have you men bring it out after I got into it a little bit.

Mr. May: I have the impression the court got the idea, from questions he asked Mr. Elmire, that the notary was on this road job.

The Court: No. The final notion I got was that the notary was there but did not listen in on all the conversation; these men had their talk before they went to his office to have the affidavit acknowledged.

Mr. May: That talk was a different place from the notary's office. The notary was in Tom's River, New Jersey.

The Court: Well, I have not got the sequence of events. Go ahead. Bring it out in your own way.

Q. Will you please state who was present the first time Mr. Bernard Clutter and Mr. Downie and yourself had this meeting at Lakewood; whether or not there was any one else present at that meeting? A. The first meeting?

Q. Yes? A. We were at Mr. Clutter's home and there was nobody present but the three mentioned.

Q. And then will you state, please, where the next meeting was and who was present? A. The next meeting was—we went down and met Mr. Clutter on a road job he was doing at Lawrence Harbor. Then we went from there on down. He had another job below Tom's River on the road to Atlantic City. We went down there. He wanted to see something about the job. And then we come from there back to the notary in Tom's River. He signed the affidavit, and we went from there to Lakewood and we had dinner there in a restaurant in Lakewood that evening.

Q. When was it then that he gave you this agreement? A. In Lakewood when we were having dinner, after he come outside. We stood outside and talked outside the restaurant on the sidewalk; and there is where Mr. Clutter handed me the memorandum.

The Court: How did he happen to hand it to you, at your suggestion or his?

A. No, sir, it was his.

Mr. Edgerton: That is all.

Cross Examination by Mr. Williams.

Q. Have you got a copy of the memorandum with you, Mr. Elmire? A. Yes, sir.

Q. Let us see it, will you please?

(Shown counsel.)

The Court: Do you know whether one is a carbon copy of the other?

A. I do not.

Mr. Williams: We are just looking to see, Your Honor.

Q. I notice you took that out of an envelope, Mr. Elmire, was that the envelope in which it was placed at the time? A. No, sir, this is an envelope my wife put it in and mailed it to me.

Q. Just recently? May I look at it, please?

(Shown counsel.)

The Court: During the trial?

A. No, sir, she mailed it to me while I was in Beaver Falls, Pennsylvania.

The Court: When you were getting ready to come up here?

A. Yes, sir. There is a notation there and the stamp on it: November, 1930.

Q. Where was this memorandum agreement typed up? A. Mr. Downie had it.

Q. Mr. Downie had them typed out before he went down to see Clutter? A. Yes, sir.

Q. How many copies did he make of it? A. That is all I know of.

Q. That is, the one copy you have is the only copy you know of? A. No, sir, these two.

Q. Oh, by these two you speak of, you mean the one you had in your possession and the copy marked as an exhibit here? A. Yes, sir.

Q. And at this meeting he took this—this was a carbon copy, the same impression as the original, was it not? A. I don't know as it is a carbon copy or not.

Q. But when you and Downie went down there, Downie had with him these two copies, and had no more so far as you know? A. Not so far as I know.

Q. But he did have these two copies? A. Mr. Downie had these two copies.

Q. You went down as I understand it, to Lakewood, you and Downie, together to see Clutter? A. Yes, sir.

Q. You say you talked with him at Clutter's house, and then you went down on a road job at Tom's River where this notary was? A. Not on the trip where we took him to his house.

Q. Oh, what was the date of this first trip, then?

The Court: Do you know how long it was before you went down on the second trip?

A. I would say two weeks to three weeks or so.

Q. The first time you went down there, was that the time these papers were taken down? A. No, sir.

Q. You had a talk down there, then, some two or three weeks, at Lakewood, before you went down with this memorandum? A. Yes, sir.

Q. What was the conversation at that first trip? What was said there? What was the purpose of the trip? A. The purpose of the trip—Mr. Downie went down to see Mr. Clutter. He said that they had some kind of a deal on, and we talked in general, a little this and a little that.

Q. You mean you and Clutter and Downie talked? A. Yes; and when we went to leave I went out and sat in the car, which was parked at the curb, and Mr. Downie and Mr. Clutter stopped in the yard and stood there and talked for, Oh, I would say three or four minutes.

The Court: How far were they from your machine?

A. About thirty or forty feet.

The Court: Did you overhear any of the conversation from that distance?

A. No, sir.

Q. What you had talked about before, while you three were together, was not any matter of any consequence, as you remember? A. No, sir, on the first trip I don't remember more than it was just general, as we knowed Clutter quite a while.

Q. But the business that Clutter and Downie talked when they were separate you did not hear? A. Not the first trip, no.

Q. And then when you went down the second trip, you and Downie, then is when you took this memorandum already typed up, and you also took, did you not, that affidavit that Clutter signed? A. Yes, sir.

Q. And those papers were already prepared before you left your office or place of business? A. I did not see them prepared.

Q. Anyhow you took them with you? A. Mr. Downie had them, yes.

The Court: That is the first you saw of them, in Mr. Rex Downie's possession, is that it?

A. Yes, sir.

Mr. Williams: You asked if they were copies. I think the one is a carbon copy of the other. The typing indicates so.

The Court: Are these carbon copies, Mr. Richey, do you know?

Mr. Richey: I have not checked them, Your Honor. We will look at them tomorrow in daylight. Maybe we can tell.

The Court: We can tell pretty well here. It looks as though they might be carbon copies.

Q. I notice on this copy—you say you kept the original—

Mr. Elmire: Two pencil lines drawn around the word "Pittsburgh" and the word "Kansas." Who put those lines there?

A. I don't know.

The Court: Were there any changes made there that night when you went back the second trip, the second day? A. Not that I know of; not that I recall.

Q. I notice on the top of that paper, in pencil, the words "Copy left with H. H. Elmire, received at"—

The Witness: Beaver Falls.

Q. November 6, 1930? A. Yes, sir.

Q. Is that when the copy was left with you, November 6th, 1930? A. No, sir.

Q. Who put that writing on there? A. Mr. Downie.

Q. You did not put any of it on there? A. No, sir.

The Court: That is the one you received from your wife?

A. That is the one I received from my wife. Here is the envelope, with the stamps.

Q. As I understand it, then, you went down with Mr. Downie to Mr. Clutter's home twice? A. Yes, sir.

Q. About two or three weeks apart, and the second time was when the affidavit and this memorandum were taken down there? A. Yes, sir.

Q. Did you ever go with Mr. Downie at any other time to see Mr. Clutter? A. We saw Mr. Clutter one time when it was up about taking or repossessing his machine.

The Court: That was after this incident?

A. Yes, sir.

The Court: Mr. Williams is asking about before that time.

Mr. Williams: I am just trying to find out if there were any other time. He said the third time is when he went and talked about repossessing the machine. Just about how long was that after your first and second visits to him? A. That was in either 1927 or 1928.

Q. Did Mr. Clutter keep a copy of the affidavit that he signed, or did you have only the one copy? A. I don't recall of Mr. Clutter having one of them.

Q. You said that there was some discussion as to whether Clutter would sign this, or should sign this agreement or not. What was that discussion? What was said by either side, anybody there? A. Well as to the—

Q. Whether he would sign it, why he would sign it, or why he would not sign it? A. Mr. Clutter signed the affidavit that he had abandoned the experiment, and he said he thought that was sufficient for to show that he abandoned the experiment.

Q. Did Mr. Downie ask him to sign the memorandum? A. We talked that over between us; and Mr. Clutter said, "Here" he says, "I will give this one to Elmire to hold, and we can see it at any time."

Q. He did not say that about the affidavit? A. No, sir.

Q. Apparently he was not concerned about that? A. He was not concerned about it.

Q. Yes. A. He signed the affidavit to show that he abandoned the experiment.

Q. And he apparently was not concerned at all about this memorandum, either signing it or having a copy of it? A. He does not appear to, when he gave me his copy.

Q. So, of the only two copies there were of the memorandum, you got one copy and Mr. Downie got the other copy? A. That is all I know of.

Q. And neither copy was signed by anybody? A. No, sir.

Q. You think, then, from his actions, that Clutter did not consider the contract of any importance or value to him? A. I could not say.

Q. Did he indicate that he was reluctant to give it up or to give it to you? A. What is that?

Q. Did you have to persuade him to give it to you, argue the matter with him? A. No, sir, he gave it to me on his own free will.

Q. You were at that time in the employment of the Keystone Driller Company? A. Yes, sir.

Q. And had been for some years? A. Yes, sir.

Q. And still are? A. Yes, sir.

Q. Did you regard it as an important document? A. No more than if Mr. Clutter wanted to see it or Mr. Downie; I would like—well—I don't know—referee.

The Court: Stake holder?

A. A stake holder.

Q. You thought it was important enough to keep in a safety deposit vault? A. I keep all of my papers there.

Q. All of your important papers? A. All of them that pertains to anything at all.

Q. Tell us some of the papers you have there, just to see what they are?

Mr. May: That is immaterial.

The Court: If he does not care about it, all right.

A. I have the deed to my house, the bill of sale for my automobile, insurance.

The Court: Your will; did you ever make a will?

A. No, sir. When the Mrs. goes away for a couple of months, she just gathers up everything and takes it up there and puts it in.

Q. Does she take the kitchen stove? A. No, sir, she does not take the kitchen stove.

Q. But most everything else. A. No, sir. I mean silver ware and the like of that.

Q. How big is your safety deposit vault? A. It is about that long.

Q. About two and one-half feet long, and how wide? A. About so wide. (indicating)

Q. 18 inches wide? A. No, sir.

Q. 12 inches? A. About 10 or 12 inches.

Q. And how deep? A. The size of 8 inches or so.

Q. That you have as your personal private box? A. Yes, for either the Mrs. or I.

The Court: She has access to it the same as you do?

A. Yes, sir.

Q. You kept there the deed to your house, bill of sale for your automobile, and when your wife went away you had to put the family silver ware there; what else did you keep in that box, besides this paper? A. I have some stocks and the like of that.

Q. You apparently thought this was a fairly important document, as far as you were concerned? A. If anybody trusts me with anything, I will take good care of it.

Q. You said you were a referee, a sort of referee between these two men.

The Court: Change that to stake holder.

Mr. Williams: He said referee. The court said stake holder. I want to get his notion.

Q. You said you were referee between these men: What was the fight, what was there to referee? A. There was no fight. What I meant by refereeing—when Mr. Clutter says, "Here, you take that; I will trust Elmire."

Q. If he did not sign it and Downie did not sign it, what was he trusting you for? A. I don't know.

Q. I would like to know what you were going to referee? What was the trouble or dispute you were going to referee between these men? A. I was not going to referee anything.

Q. So you were going to be a referee without refereeing anything? A. I just used that term, "refereeing." Mr. Clutter handed this over to me and said he would trust me with it and that he could have access to see it any time he wished to.

Q. You said before I believe that Downie also could see it if he wanted to? A. Yes, sir.

Q. What was the purpose of Downie seeing it? He kept a copy? A. Yes, sir.

Q. Why did he want to see this one? Was there any particular virtue about this one that there was not about his copy? A. No, sir. They were both the same.

Q. The fact was, was it not, that Downie did not want you to have a copy of this thing? A. No, sir.

Q. Why did you let him keep a copy of it then? A. Downie gave it to Clutter.

Q. And Clutter gave it to you? A. Yes, sir.

Q. How was it they finally decided they would not sign that agreement? What was the argument used that they would not sign it? A. I stated a little while ago that as to the reason that this was not signed.

Q. I have forgotten. Tell me again. I do not seem to have remembered. Why was it they did not sign it, or what was said about it why they did not sign it? A. Clutter stated that he thought the affidavit was not enough to show that he abandoned the experiment.

Q. That is the only thing Clutter was interested in apparently as you understand it? A. That is the only thing.

Q. In this whole deal, Clutter was only interested in saying that he abandoned the experiment? A. He said he abandoned it.

Q. Apparently you think that is the only thing Clutter was interested in in making that statement; that he was not interested in anything else in this deal, is that right? A. That he was interested in anything else before making the statement?

Q. That is all he was interested in? A. He made the affidavit.

Q. That is all he was interested in in making that affidavit and giving it to you or to Downie? A. He signed and swore to it in front of a notary and turned it over to Downie.

Q. So far as you know, that is the only thing Clutter was interested in doing, making that statement so that Downie could have it? A. I could not vouch as to what Mr. Clutter had in mind at the time.

Q. What did Downie say as to whether Clutter should sign this memorandum agreement? A. As I stated, it was talked over. We talked it over and agreed that he did not need to sign it.

The Court: Just repeat the conversation just as closely as you can remember.

A. Mr. Clutter stated—

The Court: First, where was the conversation?

A. As to the memorandum?

The Court: As to signing the memorandum, yes.

A. In Lakewood, New Jersey.

The Court: That was not in the presence of the notary?

A. That was not in the presence of the notary.

The Court: All right.

Q. So the conversation was had at Lakewood before you went down to get the notary?

The Court: Had the affidavit been signed at the time of this conversation about the signing of the memorandum?

A. Yes, sir.

The Court: All right, go ahead.

Q. Tell what was said. Not what you agreed. What you said. Downie said and what Clutter said. A. I don't remember everything that was said.

Q. Tell us something that was said. You seem to have a pretty clear memory in some respects. Tell us anything that was said. A. We come up to Lakewood and went into the restaurant and ate.

Q. I mean what was said.

The Court: Was that conversation in the restaurant?

A. Some of it was in the restaurant, and then we come outside on the sidewalk, and was talking outside the restaurant.

The Court: All right.

Q. What was said then? What did Downie say? What did you say? What did Clutter say about signing this memorandum? A. We talked the thing over and Mr. Clutter said that he did not think it needed to be signed; that the affidavit showed that he abandoned the experiment.

Q. You told us that four times. You said you talked it over and he said that. Now in talking it over, what did somebody else say? What did Downie say?

The Court: First, let us get this: At the notary's, at the time he signed the affidavit in the presence of the notary public, was anything said about the memorandum at that place?

A. No, sir.

The Court: It was not mentioned there?

A. No, sir.

The Court: When was the memorandum first mentioned? When you got back to the restaurant or before that?

A. I don't recall.

The Court: How did you go to the restaurant, in an automobile together?

A. Yes, sir.

The Court: Do you remember whether there was any conversation in the automobile about the signing of the memorandum, or was it when you got back to the restaurant? How do you recall it?

A. I cannot recall if there was anything stated about the memorandum, before we got into the restaurant to eat.

The Court: And then what happened? Did Downie pull it out of his pocket, or what happened?

A. They talked about it, and Mr. Downie got it out of his pocket.

The Court: Before or after they talked about it?

A. After they was talking about it.

Q. Let me get straight on some of this timing. As I remember it or understand it, you first went to Lakewood to Clutter's home; talked there a while; and then got in an automobile and went down to the job on Tom's River.

The Court: This is the second trip.

Q. I want the trip at which these papers were discussed and one of them signed. A. The second trip, we went down and we met Mr. Clutter at Lawrence Harbor where he was doing a job; and from there we went on down to the job below Lakewood where he had to go down there to see something about the work.

The Court: Whose automobile?

A. He had another job.

The Court: Whose automobile?

A. He was in his car, and we went in our car going down; and if I recall, he left his car down on the lower job. He had his brother down there operating a Keystone Machine, and he was going to fetch it home. He came along with us in our car, as near as I can recall that.

Q. Where was that you met him now? A. Lawrence Harbor.

Q. You met him at Lawrence Harbor and talked there a while, and then went from there where? A. Down to the job below Lakewood.

Q. How far was that, ten miles or so from Lawrence Harbor? A. No, sir, I would say that is about thirty miles or so.

Q. Did you go together or did he go in his machine and you in yours? A. When he left Lawrence Harbor he went in his.

Q. You and Downie went together and he went in his machine alone? A. Yes, sir.

Q. And then from the place near Lakewood, you say some thirty miles away, then where did you go? A. We went down on the job.

The Court: What time of the day?

Q. You went to Lawrence Harbor: What time did you get there? A. Some time in the early afternoon.

Q. And then you talked there a while and drove down near Lakewood, you say some thirty miles away: When did you get there? A. I don't know the exact time.

Q. Half hour, hour, two hours? A. It might have been say, around, somewhere—well it was somewheres between three and four o'clock or so.

Q. And then you went from there where, to the lower job, where was it? A. The lower job we arrived at that time.

Q. Where did you go from there? A. Then we came back to Tom's River.

The Court: How far was that?

A. About eight or ten miles.

Q. When did you get there, about when? A. About somewheres between five and six o'clock.

Q. How long were you there? You had dinner there? A. No, sir.

The Court: They had the notary there?

Q. Oh, that is where you struck the notary? A. Yes, sir.

Q. In the trip, as I understand you, from Lakewood up to Tom's River, and from there on, you three were together in your machine; you said Clutter left his machine on one of those jobs with his brother? A. Yes, sir. As near as I can recall he left it there for his brother to fetch home.

Q. And he then came with you up to Tom's River where you got the notary: About what time did you leave the notary's? A. Well, we were there between five and six.

Q. Then where did you go? A. Lakewood.

Q. What time did you get up there? A. Somewheres after six o'clock.

Q. And there you had dinner? A. Yes, sir.

Q. And when did you separate? About how long were you together? A. It must have been close on to ten o'clock when we separated.

Q. And then you and Downie left? A. And went up to Arlington, New Jersey.

Q. You left Clutter there. Now, then, as I understand you, when you first met Clutter at Lawrence Harbor early in the afternoon, then you talked with him about the affidavit; is that when you talked to him about the affidavit, whether he would sign it? Did you show it to him then? A. I did not have the affidavit.

Q. Who had it? A. Mr. Downie.

Q. Did Downie talk about it or tell him about it? A. Mr. Downie and him was talking about it.

Q. Did you hear what was said? A. Some of it, yes.

Q. What did they say about it? A. Downie said he had the affidavit for Mr. Clutter to sign; that he had agreed to sign when Mr. Downie was down there on the trip before.

Q. Did he show Clutter the affidavit then? A. Yes, sir, Mr. Clutter read the affidavit.

Q. And said he would sign it? A. He signed it in front of the—

Q. Well, as I understood it, he first saw it at Lawrence Harbor early in the afternoon, some thirty miles away from Tom's River? A. You understand he seen it at Lawrence?

Q. Lawrence Harbor, where you first met him? A. We first met him there.

Q. Did you show it to him there? A. I would not say if he saw it there or not. Mr. Clutter was somewhat excited at the time we arrived there. He said there was a fellow hit with an automobile on the job. I would not say if he saw it right there or not.

Q. Do you know what he took this thirty mile drive all by himself for down to Tom's River? A. He did not go to Tom's River.

Q. Where did he go? A. He went down to his lower job.

Q. Where did he meet you again then? A. We went down, the two cars together.

Q. And then from there you went then to Tom's River? A. Yes, sir.

Q. It was on that lower job he left his machine and you went together from there on? A. Yes, sir, as near as I can recall as to the machines.

Q. When did Clutter first see that affidavit? What time during this day? He did not see it until he signed it? A. Yes, sir, he saw it before he signed it.

Q. Where and when? A. I could not say if it was Lawrence Harbor or on the lower job.

The Court: Did Mr. Downie and you tell him what you came there for when you came there?

A. Mr. Downie did the talking to him. I done very little talking. I had not much to say about it.

The Court: Mr. Downie told him he had the papers prepared to sign?

A. Yes, sir.

The Court: At the first place you met him?

A. I could not say if it was at the first place or not.

(Night adjournment.)

March 13, 1931, 9:30 a. m.

CROSS EXAMINATION of Witness HOWARD H. ELMIRE resumed by Mr. Williams:

Q. Mr. Elmire, I believe you said in your direct examination that you saw Mr. Green undercutting with an excavator? A. Yes, sir.

Q. What kind of an excavator was it he was using? A. Keystone; ditcher.

Q. That is, an instroke ditcher? A. Yes, sir.

Q. And just where was it that you saw him? A. In the Bronx, in New York City.

Q. What model machine of the Keystone ditcher was it? A. Model 4.

Q. You say it was in the Bronx; whereabouts in the Bronx? A. Well, now, I have seen Mr. Green work at dozens of different places in the Bronx.

Q. Well, but tell us the particular place where you saw him using this Keystone excavator, doing undercutting work? A. I couldn't tell you the particular place.

Q. You can't tell us where? A. No, sir.

Q. Well, when was it? When was it you saw him undercutting? A. I saw him—well, say from around 1920, '21, '22.

Q. Some time in the three years that you saw him? A. Yes.

Q. Well, can't you tell me more definitely when it was? A. No, sir.

Q. Can't you tell me more definitely where it was? A. No more than in the Bronx.

Q. By the Bronx, you mean the upper part of New York City, north of the Harlem River? A. Yes, sir.

Q. Well, now, what sort of work was he doing? Trench work? A. Trench work.

Q. How deep was the trench? A. Well, I saw Mr. Green working on different depths, up to 18 feet.

Q. Well, now, I am talking about this undercutting; how deep was the trench where he was undercutting? A. I saw him undercutting on—well, various depths.

Q. What depths? A. Well, I would say maybe some of them was 6, some of them was 8, 10, and the like of that.

Q. You say, maybe some of them was? A. Yes.

Q. Well, do you remember any specific case now of any particular depth at which he was undercutting? A. I remember of several different places, but I couldn't say as to the location.

Q. Well, you say you remember several different places; now tell me just one of them. A. Well, I couldn't tell you.

Q. Well, how wide was the trench you saw him digging when he was undercutting? A. Well, they run 30, 36 inches, and some of them 42.

Q. And do you mean to tell the court that you saw him undercutting at various times and at various widths of trenches and at various depths? A. Yes, sir.

Q. Now, what was that undercutting? A. Why, you take when you are cutting a curve—

Q. No, I am asking you what was he undercutting? A. He was undercutting on rocks, boulders that would stick out into the trench, say a foot or so, and on passing of poles, if you had to throw your machine out of line.

Q. No, I am not talking generally; I am asking you to tell me what particular place, the particular boulders, or size of the boulder that he undercut? A. Well, I couldn't tell you as to the size of the boulder. The end of it would just stick out into the trench, and you wouldn't know how far it went back.

Q. And how deep was that boulder in the ground that you saw him undercutting? A. How deep which way?

Q. Below the surface of the ground; how deep was that boulder below the surface of the ground? A. Well, I have seen him on several ones; I couldn't say just specifically as to how deep it was.

Q. Can't tell me any particular one; can't locate it now? A. I couldn't tell you just the depth of it.

Q. What was the character of the soil in which he was undercutting? A. It was hard soil, with boulders in it.

Q. How big were the boulders? A. All sizes.

Q. All sizes? From what size up to what size? A. Well, you might find some not bigger than the end of your thumb, and you might find—

Q. I am not asking what you might find. I am asking you what you saw? A. Well, that is what I am trying to tell you.

Q. Well, I am asking you what you saw him undercutting, what the character of the soil was. A. And you asked how large the boulders was.

Q. Yes, that you saw him working at? A. And I said they was all sizes of boulders in this here soil.

Q. And how big were some of the boulders? A. Some of them was as big as your trench, as to the width you would cut out; that was in the soil, some of them would stick out in the trench from the side like that, and you get down by them and lift your stick over, got by, and then out in under them, and then go on down, and they would lay the pipe under.

Q. You are talking about the way you would do the work, and the way you were in the habit of doing it. A. The way it is done, and the way I have saw Mr. Green do it.

Q. Well, what was the largest boulder you saw him undercutting? A. I couldn't say.

Q. How deep was the trench in the largest, with respect to the largest boulder that you saw him undercut? A. I said, various depths.

Q. I am talking about the larger boulders now you saw him undercut. What kind of a trench was that? How deep? A. I couldn't say as to the largest boulder I saw him undercut.

Q. I see. Well, then, how wide was the trench when he was undercutting the largest boulders that you saw him undercut? A. It run from 32 to 42 inch.

Q. That is, that particular boulder, the largest you saw? A. No, the width of the trench.

Q. Oh, it run from 32 to 42 inches. Now, where was that trench? A. In the Bronx.

Q. Whereabouts in the Bronx? A. I said before, I couldn't give the location, for I saw Mr. Green working around over the Bronx.

Q. Well, now will you tell us just what is the operation of undercutting, as you understand it? How is it done? A. How the undercutting is done?

Q. Yes. A. Well, if you hit a boulder or niggerhead—some call them niggerheads—and it projects out the side of the ditch, into your ditch, for say 6, 8, 10 inches, 12 inches or more, and you have got to go on down, and you dig around that boulder and go down under it, and the boulder is projecting out of your trench when you finish it, out in your trench; and on cutting a ditch on a curve when you have your machine, your boom and scoop is straight out ahead of you, and have to get the radius of your ditch, you lay your stick over to cut about whatever radius you want, and just keep moving around on your curve.

Q. Now, you say you lay the stick over; how do you do that? A. Lay it over with the power of the machine.

Q. That is, you rotate your machine, and bend or twist the stick over? A. Not on the Model 4, no, sir.

Q. I mean, you swing the boom around and throw the stick out of the perpendicular; is that right? A. You swing what we call the hog rods.

Q. What are they? A. They are two rods fastened on to a swing circle in the top, where you swing your boom up. This is on the Model 4 Keystone excavator, and your boom is straight out, you swing your hog rods off to what angle you want, and your hoisting line of your boom, that hoists your boom, is anchored on these hog rods. Then you apply the necessary power onto the haul line or pulling your boom level with the hog rod here, and you pull on a slant and you tip your boom over.

Q. Well, do you mean that with the hog rod you twist the boom itself? A. With the cable that is anchored to the hog rod.

Q. You twist the boom? A. You twist the boom over.

Q. You twist that big heavy iron channel member—twist that so that it throws the stick out of perpendicular? A. Yes, sir.

Q. How much experience have you had in actually running these machines that do this undercutting work? A. I have, went on in the fall of 1917.

Q. Well, how much did you operate them? A. I operated until February 1, 1922, steady, and from that on, off and on right along.

Q. By operating, you mean you were the engineer actually operating the machine, the mechanism? A. Yes, sir.

Q. How were you working, by the day on a job, or just demonstrating machines? A. I was demonstrating.

Q. That is, after 1917? A. After 1917.

Q. You were not working at any commercial operations, then; you were just demonstrating it for sale? A. I went out and worked some for contractors when they was short of an engineer.

Q. And during that time you were employed by the Keystone Co.? A. Yes, sir.

Q. And they simply loaned you to a contractor at the time? A. Loaned me out, if one of the customers had no engineer and I wasn't busy, why they would put me to work.

Q. Well, now just tell us step by step the operation, or the steps of the operation, in cutting down past by this boulder that you spoke of that you could get around the trench by undercutting? Just tell us in detail what you did and what operations you performed.

Mr. Richey: It seems to me he has just answered that. How many times do you want this?

Mr. Williams: Well, I may be pretty dumb, but I didn't get it very clearly.

The Court: I think he has described it pretty well, but he might answer this, only in the interest of time—if you want to go on, you go on.

Mr. Williams: Just this one question, if he will answer it.

The Court: All right.

(Last question read)

A. Well, you dig down, and if you hit a boulder that is sticking out into the trench, say for 10, 12 inches, or 8 inches, and it is too big to pull out, and it extends back into the side, you lean your stick over and go down and slide your bucket around the point of the boulder, and when you get down by, you straighten up your stick and go on and lift your boulder, and it is up here projecting out here in the ditch. Now, if it is clear over the ditch, why you can't do it.

Mr. Williams: That is all.

RE-DIRECT EXAMINATION by Mr. Edgerton.

Q. Did you see the exhibition of the moving pictures last evening, taken by Mr. Sessions and exhibited here? A. Yes, sir.

Q. That is, Exhibit 49?

Mr. Corbett: This is new matter. Was this raised on direct?

Mr. Edgerton: I don't believe the picture was.

Mr. Corbett: Well, we don't want to be unduly technical, but this matter was not raised on direct.

The Court: Well, that would be a good objection. What do you want him to do?

Mr. Edgerton: I just asked him if he had seen excavations of that type before.

The Court: All right, ask him that direct question then.

Q. Is that picture you witnessed typical of the excavations you have seen?

The Court: Well, have you seen some like that before?

The Witness: Yes, sir.

Q. Will you look at the scoop shown in the Clutter patent, 1,107,899, and state whether or not the Keystone Driller Company has made and sold a scoop like that shown in the drawing with respect to the latch? A. I would like to see that.

Mr. Edgerton: That is Defendant's Exhibit 25. (Exhibit shown to witness)

A. No, sir; not to my knowledge.

Q. I now hand you Plaintiff's Exhibits P-54, 55, 56, 57, and 53, and ask you whether these photographs illustrate material which is typical of the type of work you have observed as done by the Keystone Driller Company's machine? A. Yes, sir.

Mr. Edgerton: That is all.

RE-CROSS EXAMINATION by Mr. Corbett.

Q. Prior to 1920, the Keystone Driller Company was selling skimmer scoops with drop bottoms; isn't that correct? A. Yes, sir.

Q. And those drop bottoms are substantially like that structure you see in that patent; isn't that right? A. Some of them.

Q. Some of them? A. Yes, sir.

Mr. Williams: We offer in evidence as Defendant's Exhibit 114, the original of the memorandum agreement unsigned between Clutter and the Keystone Driller Company, being the original of which Exhibit 98 is a carbon copy.

The Court: Any objection.
Mr. Edgerton: No.

Thereupon the plaintiff, further to maintain the issues upon its part, called as a witness in its behalf in rebuttal:

Rex R. Downie, recalled as a witness by plaintiff, further testified as follows:

Direct Examination by Mr. Richey.

Q. Mr. Downie, during your testimony in this case, defendant's counsel asked you if you could find any catalogs of your company which said anything about the rock digging of the plaintiff's machine. At that time you said that you couldn't find any here in Toledo that you had with you. Have you since found any? A. I have located references to digging hard and shale and rocky materials, at some points in the catalogs.

Q. Will you produce the ones you found?

Mr. Richey: I will ask that they be given the next three numbers, Exhibits P-58, 59 and 60.

Q. I now hand you three leaflets or catalogs, marked Exhibits P-58, P-59 and P-60. If those are the ones, will you so indicate, and call attention to the parts which refer to digging in the hard material?

The Court: The places are underscored, are they?
Mr. Richey: You might underscore the parts.

A. I will do that. I underscore on Exhibit 58 the matter in the upper right hand corner, the legend appearing beneath a view of the ditcher loading into a truck.

Mr. Corbett: Have you given the page?
The Witness: I did not. The pages are not numbered, but it is the final, that is, fourth page of the folder—

Q. Marked P-58? A. Marked Exhibit P-58. On Exhibit P-59, I have underscored the words at the left hand lower legend, "when the ditch runs into boulders,

slate, shale, water, ice," etc. Likewise on Exhibit 60, I have underscored, "dirt, clay, gravel, boulders, shale, blasted rock."

Q. When were each of these catalogs issued? A. The first, Exhibit 58, is dated May 1, 1923. The second, Exhibit 59, I am unable to date exactly. I remember both of the views here shown, and would therefore place it as being issued not earlier than 1921, and as being one of the series issued between 1921 and 1926. Exhibit 60 is not dated, but from the views of the machine I place it as issued in 1926 or '27. I see that this Exhibit is directed principally to advertising the Model 4-27, so that I feel sure that it was issued in that year, 1927.

Q. Have you since you were asked to produce catalogs with such remarks in, looked over the catalogs which are exhibits in this case, and found similar remarks? To save time, I will direct your attention to page 33 of Exhibit P-18. A. Yes, sir.

Q. And will you mark that, and state what it is you found on this exhibit? A. I did locate on further examination, in Exhibit P-18, matter referring to the performance of the ditcher, on page 23, second column—

Q. 33, isn't it? A. 33, yes—and I am underscoring, beginning at about the seventh or eighth line, the language, "The ditcher scoops can be operated in any material that can be dug mechanically. The presence of frosted ground will be no impediment. While we do not claim for the machine that it will dig hardrock, it is a fact that it will handle slates and shales between depths of four feet and ten feet, without blasting."

Q. And it further reads, "And hard surface strata, if underlaid with soft ground?" A. That is correct.

Q. Now, the same remarks are to be found at page 43 of Plaintiff's Exhibit P-20; that is correct, isn't it? A. Yes, sir. This is the same text.

Q. These catalogs were issued in 1921 and 1925, weren't they? A. That is correct.

Q. Something has been suggested here about the claimed inability of the Clutter machine to reach out with the stick extending directly out from the boom. Do you find any illustrations of that in any of these catalogs you have produced here? A. Yes, sir; in Exhibit P-58.

Q. And as a matter of fact, have you ever seen any of the Clutter machines in that position? A. Yes, sir; many times.

Q. Operating? A. Operating.

Q. You can illustrate that in this model of the Clutter machine, Exhibit P-15, can't you? A. Yes, sir.

Mr. Richey: Do you want to do it?

Mr. Corbett: You make your case to suit yourself. I don't want you to have me tell you how.

Q. There was some controversy here about the machine of the Webber patent, which was in the Cleveland case, and the machine of the King patent, and also in connection with the machines of those two patents said to have been used in a limited way commercially. Will you look at the Webber patents 528,312, 557,359, and the King patent 579,589, and machines illustrated in the Defendant's Exhibits 21 and 22, and 54 and 55, and compare these machines in mode of operation and results? And you also might point out any mechanical differences and see whether or not they are material as affecting the operation or results? You have copies of those patents, haven't you, Mr. Downie? A. I have no copies of them here.

Mr. Richey: Well, give him copies of them, will you, somebody?

The Witness: Does your present question refer only to Defendant's Exhibits 22, 21 and 55, or does it include the patents which you have named?

Mr. Richey: It includes the patents I have named.

The Witness: Will you give me a list of those numbers?

Mr. Richey: Yes, sir. I think there were some charts here used, on those Webber and King patents. Can we have those, Mr. Corbett?

Mr. Corbett: What is that?

Mr. Richey: The charts you had of the Webber and King patent machines.

Mr. Corbett: We have all the charts here, I believe, that were used; the chart was just an enlargement of the machine.

Mr. Richey: Well, that is what I mean, enlargements of them.

Mr. Corbett: What number of King was that?

Mr. Richey: Well, all the King patents and all the Webber patents.

(Chart of King patent, and chart of one of Webber patents produced.)

Q. I will add to that list of things we asked you to consider, the machine shown in Exhibit 23, which I understand is defendant's duplication. A. All of the machines referred to in your question, including the defendant's Exhibit 23, are of the same general type, in that they have a boom of fixed elevation and reciprocating dipper stick, carried at the outer end of the boom, reversing mechanisms for the reciprocation of the dipper stick or handle, a scoop carried at the lower end of the stick, a variously termed digging line and hoisting line attached to the scoop and extending upwardly to a high point in the fixed boom structure.

All of them are limited in that they operate substantially only through the one quadrant, that is, from plumb position up to ground level. They are all inward stroke machines; they are all hand-dumped buckets; they all discharge with the stick in horizontal position, and the end of the bucket presented downwardly. That summarizes their operation, I believe, as a class.

Q. Now, will you compare these machines, and operations, and advantages and disadvantages; with the machine of the Clutter patent in suit? A. The principal distinction between this type of class of machine, and it may be stated, with reference to each of the machines which you have named as representative of the type, is that these machines have the equivalent of three power members for their operation, in that the dipper stick or ditcher stick is reciprocable at the end of the boom and requires a power application in each direction, upwardly for overcoming the weight of the scoop and to exert a lift upon the material being excavated in regulating the gauge or bite of the scoop, and downwardly, in order to force engagement, and each has the digging line referred to as "M" in the chart here, Defendant's Chart No. 3, G. W. King, No. 579,589, whereas in the machine in the Clutter patent there are but two power actuated lines for doing the analogous duty of elevating the scoop, lowering it, hauling it machinewardly and repositioning it in the opposite direction, in both the digging and discharging phases of operation.

A second distinction in this class from the Clutter machine is that none of these machines can be used for the delivery of a gravity blow, either a simple gravity blow, or a power-sharpened or accentuated blow, such as Clutter applies, and this is because these machines have no means other than momentum of the scoop and

stick for carrying the scoop and stick out to the horizontal or initial position required for delivery of a downward blow, or for controlling the position of the scoop if swung to that position.

I do not observe, in glancing over the illustration, photos, drawings of these machines, any indication of capacity for single width excavation. There is one photo, Defendant's Exhibit No. 22, which might or might not, so far as the photograph shows, indicate a machine working at single width. The others are not made suitably for this work, having for the most part bails outside of the scoop shell, and without clearance producing structure. I am comparing only with the Clutter machine?

Q. That is correct. A. Yes, sir.

(Narrative continued.) These machines have a stationary boom, that is, a boom which is stationary in the vertical plane. That is also a distinction, not only of Clutter, but from all of the rest of the patents in suit. That completes my summary of this class of machines. Some of these machines are said to have been used in digging what is known as South Carolina bone or phosphate rock. I have read a little in regard to it, from a textbook on industrial chemistry of the Carolinas, I do not have the author's name. I believe the name was Thorpe.

Mr. Richey: That probably is incompetent, except from an expert, I think, will help the court to summarize.

Q. What did you find in that book to be the nature of that?

Mr. Corbett: Your Honor, we object to that. The book is the best evidence of that.

The Court: Yes, I think so.

Mr. Richey: All right.

Q. I understood defendant's expert, Mr. Turner, to say that he considered the Rood patent, No. 386,438, to illustrate and describe a machine which was nearer like the machine of the Clutter patent in suit than any of the others he discussed. Will you next take up the machine of this Rood patent, and compare it in structure, mode of operation, and results, with the machine of the Clutter patent?

The Court: Do you have one of those charts for that?

Mr. Richey: Yes. (Presents Chart 1.)

A. The machine to which you refer, E. O. Rood, 386,438, was a dual machine; that is, it was a machine carrying two booms, two ditcher sticks and two sticks, one of which is illustrated in the chart 1 of defendant. May I ask, Mr. Richey, whether the operation of the machine as testified by Mr. C. W. Rood is admissible in the explanation of its functioning, or only that of the patent?

Mr. Corbett: Your Honor, we think he ought to either testify from the patent or his own knowledge about this matter.

The Witness: I will confine myself to the patent operations.

The Court: Very well.

A. (Continuing.) There is a boom, a stick member 13 in this chart, a scoop "b", a line 16-18 connected with the upper end of the stick and passing under a deflector sheave carried in the boom and extending upwardly to the point of the frame of the machine; another line extending from the scoop, to which it is attached with a hauling bail, this line being marked 22, 23, which is the same cable, the first section being a chain, the second section being wire or other rope, and extending upwardly over a high sheave in the frame and then to the winding mechanism. The line 23 referred to as the haul hoist line is carried a little to one side in its traverse of a sheave in the frame of the machine, and thus exerts, in operation, a sidewise effort upon the boom, and so swung the boom laterally for discharge. Each boom was swung to one side or the other; that is to say, the right hand boom was swung outwardly to the right, and the left hand boom to the left, or by an arrangement of a skid or guide structure marked 4 in the patent—(not marked in this diagram), the booms could be made to operate toward a medial or median discharge area as located between two parallel ditches, or could be made to discharge at both sides of a common relatively wider ditch. The function of the line 23 was to haul the scoop through the material, and after the scoop engaged the boom to elevate the boom, the scoop and stick; thus it performed both the hauling and hoisting functions—a major distinction.

During the hauling of the scoop through the material, due to the relatively great elevation of the line 23 as required for its other duty, that of hoisting, it incidentally during hauling exerted quite a lift upon the

boom, and that called for an additional element of control or positioning means for the boom, a spar marked "c" in the patent and in the diagram. This spar operated through a guide, a clamping guide, at the upper end of the front frame of the machine, and when the boom was lowered to the desired elevation for digging, the spar was gripped by means of these clamps as controlled by a rod extending down the front frame of the machine and brought to the hand of one of the operators. The spar then prevented the boom from either falling too low, as in case the scoop would tend to bite itself into too deep engagement, or to rise in case the resistance of the scoop—the resistance encountered by the scoop would cause the boom to lift or in case the effort of the hauling line would lift it. So the scoop passed across through the material in one prefixed relatively unchanging path from the time that the boom was fixed in its position until the time that the scoop struck the boom. This we call the inelection of the Rood machine as compared with the Clutter machine. As I say, when the scoop struck the boom, the operator promptly released the spar grips and the continued winding of the haul hoist line 23 elevated the structure, and due to this sidewise draft upon it, skidded it up along the guides to discharge position, at which point the grip stick or spar "c" was again gripped and the engines were then reversed, and as the other half of the machine started into its digging stroke, this one half of the machine, whose operation we are following, began its discharging sweep of the stick, due to the unwinding upon the dump line 16.

As I say, the other scoop meanwhile traversing its digging path and gathering its load. The one boom having discharged its load from its scoop, was then allowed, under the snubbing of the dump line 16 to slid back down the guides along a fixed path to a position of elevation, in regard to which the operator had made election; that is, for deeper ditches the operator adjusted the base of his boom by means of a worm and nut arrangement with a small hand wheel, so that the boom, riding over the guide as a fulcrum, or the horizontal portion of the guide on the floor of the machine as a fulcrum, could be raised or lowered some slight distance at the outer end. But assuming the adjustment to remain constant, the operator merely allowed the boom to slide down onto the horizontal portion of the guide and again clamped his spar, the engines were now reversed, and

as the other boom in the air began its discharging sweep, the scoop which we are following began its loading sweep at the elevation fixed by the spar. That completes a cycle of operation.

The major distinction in utility between this machine and that of Mr. Clutter is the functionalization of the lines. Mr. Clutter has a hoisting line usable at any instant in operation for the purpose of hoisting or lowering the boom and scoop, and a hauling line usable at any instant for hauling the scoop or allowing it to run out.

In the Rood machine, the upper line is not a hoisting line, but was used only for dumping the stick; the lower line is a hauling line, and is also a hoisting line, and was called the haul hoist. The spar or stick "c" of Rood has no analog in the Clutter structure, since the boom in that machine delivered its own weight upon the scoop, hauling line power being delivered by the special hauling line which did not tend to lift the boom.

The Rood machine is apparently not used for single width excavation; not usable for striking the gravity blow, since the sharp gravity action of the one scoop would involve a corresponding sharp upwardly action of the other scoop, the two being always in opposition, and the lifting of the scoop in the air would of course deaden, if not prevent, the sharp falling of the scoop used for striking a blow.

As mentioned previously, the operator of the Rood machine has little or no election in the travel, in the hauling of his scoop toward the boom. Of course, the engines could be stopped in case an obstruction was encountered and foreseen far enough to permit that operation; but in general the operation of the machine was a transverse and fixed inexorable path of the scoop.

The equipment in the power plant, including the drums, etc., of the Rood patent is such that it would not permit any other kind of operation other than I have described, except that there might be a variation in the procedure at the upper or discharging point of the cycle; that is, as to whether the spar "c" would be clamped and the bucket overturned by an inwinding of the bottom line at one elevation of the boom, or whether the bottom line could be nearly snubbed, and the engines reversed at the beginning of the sweep, and the boom allowed to start its downward coast, and in such coasting cause a relative inwinding of the bottom line. Aside from this one detail, the operation is fixed.

It is not possible to arrange the drums and power plant to operate this machine the way Mr. Turner said it might be operated, because the one boom set against the other boom would have its reverse directions, and since weight, as one element here—that is, the weight of the scoop as in striking a gravity blow, would be in some sense in opposition to the other half of the machine, that effort would be futile.

The drums and clamps also were such that you could not operate it in any other manner than that. To do it you would have to rearrange the entire power plant, and the transmission mechanism, likewise the lines and the booms and method of support, as well as the stick and scoop structure.

Q. Now, he said something about leaving off the spar and putting on a bottom line, I think it was. Would that make a change in the operation? A. That happened in the deposition, Mr. Richey.

Mr. Richey: I know, but Mr. Turner testified to that. That is in this case, that much about that.

Mr. Corbett: I object to what he says was in the deposition.

Q. Well, assuming the spar is left off, and the bottom line is put on instead, would that change the operation any? A. It would change it in just this way, that the bottom line, that is, a line connected to the boom and to a point upon the frame for preventing the boom from falling more than so far, had to be adjusted from time to time instead of the spar being clamped from time to time. But I would not say that that was a material modification toward any real election in the operation of the machine.

Mr. Richey: I would say, Your Honor, that in the Cleveland case there was some depositions relative to this use, the variation made in it, and the other side asked us if we would stipulate them in this case, and we told them we would, and we were rather surprised yesterday when they were not stipulated in.

Mr. Corbett: Just simply because we found more important matter, is all. Nothing surprising about that.

Q. Had you finished your discussion?

Mr. Corbett: We object to this witness stating what was present in the deposition in that case.

Mr. Richey: He has not stated it.

The Witness: That summarizes my comment, the deficiency of inability to strike a blow, inelection of the scoop travel.

Q. Will you now take up the various Mahoney machines, beginning with that shown in Defendant's Exhibit 4, and then that shown in Defendant's Exhibits 5 and 6, and then that shown in the Mahoney patent 1,194,204—

The Court: We will take a recess while you get those together.

(Recess.)

Q. (Continuing.) And then the one shown in Defendant's Exhibit 9, known as the Ledgerwood machine, and compare each of these in turn, in structure, mode of operation and results with the machine of the Clutter patent in suit?

The Court: Have you a chart of that here?

Mr. Richey: Yes, here is a chart of the Mahoney patent, and the large photographs of the machines Mr. Corbett is getting for us. This is Exhibit 4.

The Court: According to the testimony, this machine antedates yours, doesn't it?

Mr. Richey: Yes, sir; we claim that it was an abandoned experiment. And then we also claim it doesn't anticipate anyway, but it is prior to Clutter.

Mr. Corbett: One of those photographs is at the hotel, and I am sending over for it; in the meantime can he go ahead with this one?

Mr. Richey: Yes, and in the meantime I think we can use the small photographs, 5 and 6.

A. The first of the Mahoney machines was that of Defendant's Exhibit 4, and I will refer to the machine from an enlargement of that photograph. The mechanism of the Mahoney machine comprises the handling machine with suitable drums for operating the lines, a boom or leaning mast of fixed position, at the base of it pivotally mounted to elevate the boom, carrying at the end of the boom a ditcher stick which carries at its lower end a pivoted scoop. The boom extends somewhat beyond the point of pivotal attachment of the ditcher stick. The cables operating the device are a hoisting line extending in three parts from the leaning mast to the outer end of the boom, two of the parts coming over a sheave pivotally carried in the short link attached to the upper end of the ditcher stick which extends slightly above its point of attachment to the boom, the end part of the hoisting

being dead-ended directly to the outer end of the boom. This cable was used for elevating and lowering the entire digging portion of the structure.

The Court: That is, the boom and the stick both?

The Witness: The boom and scoop and stick and load.

There was a second line called a hauling or pulling line and extending over a sheave in the machine down through the leaning mast and through the boom to a bail upon the scoop, the bail being pivotally attached at a common axis with the lifting bail or yoke which connected the scoop to the ditcher stick. This cable was used for pulling the scoop towards the machine for filling. There was a third cable or line extending from the scoop up and about a sheave on the outer end of the boom through a slot in the mast or A-frame of the machine, and thence to a winch head upon the left hand side of the machine. This line, called the dump line, passed about a small pulley or sheave carried by a yoke pivotally attached to the rear end of the scoop, and having at its mid length an eye for the attachment of the pulley. The dump line is deadened at the point just in the rear of the sheave at the outer extremity of the boom, and the function of the dump line was three-fold, first, and from which function it takes its name, that of inverting the scoop at discharge for depositing spoil.

The Court: That is the dump line?

The Witness: That is the dump line, yes. The second function of the line was to assist in swinging the stick and scoop outwardly from the machine to the position of discharge. The third function was to regulate or adjust the tilt or angle of the scoop during its passage through the material, the manipulation of the dump line in this duty being in the hand of the left hand operator, and required a tautening or slackening of the line, as the case might be, on the constantly revolving winch head carried at the left hand end of what seems to be the main drum shaft of the handling machine. When the dump line tension was not needed, that is, as when the scoop was passing through the material at a satisfactory gauge or bite, the drum was allowed to revolve in the loosely wound dump line which apparently ordinarily had three or four turns about the drum.

The scoop was swung outwardly in part by the action of the two parts of the hoisting line, link attached to the

upper end of the ditcher stick; the length of this upper arm or extension of the stick is not exactly known, but would be in the neighborhood of 5 or 6 inches. The action of the two parts of the hoisting line and the action of the dump line in outswinging the scoop effected an outswinging to such a point that with the boom in the ordinary elevation of discharge, approximately 45 degrees from the horizontal, the scoop or the stick came to a position about right angular or perpendicular of the boom, at which point apparently the effort of the dump line caused complete or final inversion of the scoop, consequently rendering any possible travel beyond that point ineffective for more remote disposition of the spoil.

The hoist line of the Mahoney Exhibit 4 machine is fairly comparable to the hoist line of the Clutter machine in its hoisting function, but is not comparable in the secondary function of the hoist line of the Clutter machine; that is, its adequacy and use for outswinging the stick to and beyond the horizontal position for the striking of a blow.

Q. Beyond the vertical position is that? A. No, sir, I mean speaking of horizontal position, practical alignment of the boom, if the boom is horizontal, for the striking of a blow or the simple inversion discharge, or for the downward presentation used in the beginning of first sinking of an excavation.

The hauling line of Mahoney is fairly comparable to the hauling line of Clutter, in that each was used exclusively for and was adequate for the pulling of the scoop through the material without assistance from any other line. The dump line of Mahoney has no analog in the Clutter organization. This arises from the fact that Clutter's discharge was effected by means of the gravity of the load; the weight of the load and scoop caused the oscillation of the scoop necessary for presenting the mouth either downwardly or diagonally downwardly to permit it to fall out. In the Mahoney machine the carrying yoke, that is, lifting bail, was pivoted at a point somewhat forwardly, that is, toward the tooth end of the scoop, from the center of gravity of the scoop and load, so that the scoop was, to use the expression "tail heavy" and normally took the position where the rear end of the scoop was lower than the tooth end whenever tension was released upon the dump line, and so in the discharge phase and operation it was necessary to pull upon the dump line in order to invert the scoop; power was re-

quired for the operation of the dump line because this operation required an elevation of the load, and this would require a substantial effort.

The other functions of the dump line of Mahoney are distributed to the other lines of Clutter, both of them being performed in and through the hoisting line of Clutter, that is, the secondary function of the dump line, that of assisting in the outward swinging of the stick, was performed entirely and adequately by the hoisting line of Clutter indirectly through this lever action upon the stick. The function of regulating the depth of engagement of the dump line of Mahoney is performed entirely by the hoisting line of Clutter with, or in combined utilization with, the fixed presentation of the scoop which Clutter has—that is, a scoop having a machine-fixed or stick-fixed position and presentation at all times independently of the work and unaffected by the resistance of the work.

On this Exhibit 4 machine there is a strut pivotally attached at a point near the upper end of the stick and extending to a ledge, arcuate in shape as viewed from the rear end of the scoop, so that the strut engaging the ledge will engage and be kept central on the width of the scoop by its pressure upon it, the strut being movable by means of a lever, of a construction not precisely determinable but actuated by the hand line running to the left hand operator, that is, the operator who manipulates the dump line upon the revolving winch head at the left hand side of the machine. The strut engaging the rear end of the scoop had the result of making the scoop in the Exhibit 4 machine, which is called the cornfield machine, semi-fixed in presentation; that is to say, the scoop was by the strut prevented from revolving in the clock-wise direction as viewed from the left hand side, as would result except for the strut from a lifting exertion of the teeth, the strut being in compression. Then the strut would continue to maintain such presentation of the scoop only so long as the lifting was exerted by the teeth; and for this reason, as I have said, semi-fixed. And if in the travel of the scoop the weight of the boom and stick was allowed to ride the scoop for the forcing of engagement, and if the teeth encountered a rising path, that is, a path rising relatively to or from the arcuate path of the scoop, the teeth would be pressing downwardly on the material and the scoop was free to revolve away from the lower end of the strut; hence the

scoop would not be fixed against elevation at the tooth end during its digging travel, but only against depression at the tooth end.

Then as the boom was swung around aside for discharge the strut, of course, had to be kicked off the ledge for inversion of the scoop, for it does not appear that the Mahoney scoop was ever discharged by simple inversion as used in the Clutter machine, the strut being kicked off by the hand operated line and the dump line simultaneously or immediately thereafter pulled for revolving or upending the scoop. It is likely that the dump line would have a tension upon it as the instant that the strut was kicked off, but if it did not, or if it was momentarily relaxed, then it would be immediately thereafter retensioned. The hand line of the Mahoney machine may be fairly compared to the dump line of the Clutter machine, leaving the net difference between the Clutter machine and the Mahoney machine as to the lines and the functions of them, one line of Mahoney, the dump line, having three functions all performed by the hoisting line of Clutter assisted by the fact of Clutter's fixed presentation, and resulting in another net difference in structural balancing of the elements, in that Clutter had fixity of presentation of scoop independently of the work, whereas this machine was placed upon the ground and the scoop allowed to lay flat upon it, and derived its direction, in part from the work, in part from tautening or slackening of the dump line in the hand of the left hand operator, and in cooperation with and in part from the tightening or loosening of the hoist line by the right hand operator, whereas, of course, in the Clutter machine all of these functions being performed by the hoisting line were in the left hand of the one operator.

The Mahoney machine, this Exhibit 4 machine, was not used for the delivery of the blow or for the excavation of single width trench, did not have 180 degree travel. I think that completes my summary of it.

Q. Now, will you pass on to the Vincennes machine —that is right, isn't it, the one shown in Exhibit 5?

Mr. Corbett: Well, they were all the same machine. This machine was used at Gorham and at Vincennes.

Mr. Richey: We do not agree that it was proved that it was used at Gorham.

Q. Well, anyway, Exhibit 5. You can discuss that by comparing it with the other. A. Referring to the ma-

chine of Exhibit 5, the principal distinctions between it and the previously referred to machine are that in the cornfield machine the hoisting sheave is connected by a short link to the upper end of the ditcher stick, whereas in the Vincennes machine the sheave is carried directly upon the head end of the ditcher stick. Second, that in the cornfield machine the hoisting cable was dead-ended directly upon the boom, that is, the end part of the cable, whereas in the Vincennes machine the end part of the hoisting line extends over a sheave carried at the extremity of the boom, and then downwardly to and attached to the lower end of the dipper handle or stick. A third distinction is that in the Vincennes machine the pulley for the dump line is attached by a short link directly to the rear wall of the scoop at its mid-width, whereas there is a yoke or bail in the cornfield machine.

A fourth distinction is that the hauling line of the cornfield machine is attached by means of a bail—or at the pivotal point of attachment of the carrying bail to the scoop, whereas in the Vincennes machine the bail is attached at the forward edge of the scoop. Another distinction is that in the Vincennes machine there are Z shaped pieces attached to the rear end of the scoop extending out a short distance from the side, and that the bail instead of consisting of strap members or bar members has lateral reaches of chain.

The dump line of the cornfield machine extends over a sheave carried at the extremity of the boom, whereas in the Vincennes machine the dump line extends from the same winch head in general through the same course, but passes over a small pulley carried at the side of the boom, and near the point of attachment of the stick and boom, thence downwardly about the small pulley at the rear of the scoop and upwardly, and made fast at the end of the boom, in a manner comparable to the attachment of the dump line in the cornfield machine.

Q. Now, did those changes make any difference in the operation and advantages of the machine? A. Yes, sir, with one additional one which should be mentioned. I was looking to see if there were others.

Q. All right. A. In the Vincennes machine the strut does not appear, nor is there any comparable or analogous element. The functional difference between the cornfield and Vincennes machines is only such difference as would be entailed by the elimination or dropping of the strut attached to the stick and semi-fixing the scoop.

As to the functionalization of the lines, there is a distinction in the hoisting line in that the end part, as I have stated, of the hoisting line extends downwardly and is made fast to the dipper stick, and assists, therefore, in swinging the stick outwardly, cooperating or combining for that purpose with the two parts of the hoisting line extending from the sheave at the head end of the stick, and with the dump line which also was used in the outswinging of the stick. So the outswinging of the stick in the Vincennes machine, then, to summarize, was performed by three distinguishable avenues of power,—the one end part of the hoist line, the other two parts of the hoist line, and the dump line.

Q. Is the machine in Exhibit 5, the Vincennes machine, any nearer the Clutter machine in operation or results than the cornfield machine? A. No, sir. I would say that the Vincennes machine is further from the Clutter machine for lack of its earlier semi-fixed presentation of the scoop to the material.

Q. Now, will you take up the machine of the Mahoney patent, and I don't think it will be necessary to point out all the detailed differences, but any major differences or remarkable differences. A. The Mahoney patent machine has a link at the head end of the stick like the cornfield machine. The hauling bail is attached to the same point as the lifting bail, like the cornfield machine; the dump line is attached to a small sheave at the rear of the scoop like the Vincennes machine; the dump line is carried over a little sheave on the left hand side of the boom like the Vincennes machine; the dump line is deadened as in the Vincennes machine. Those are the only distinctions.

That is still further away from the Clutter than the Vincennes machine, in that it does not have even the moderate fixity of scoop presentation which might be derived in the Vincennes machine from the fact of attachment of the hauling line to the forward edge of the bucket instead of at the center of the bucket.

Now, the Ledgerwood machine, in Exhibit 9—

The Court: This is what?

Mr. Richey: Ledgerwood, they call it.

The Witness: So called by manufacturer or made up by the Ledgerwood Manufacturing Company, I believe, of New York.

Mr. Mahoney: For Mahoney.

Mr. Richey: For Mahoney, that is right. Never used—that is right, isn't it?

Mr. Mahoney: Yes, it is shown that it was used some place.

(Narrative continued.) We have no enlargement of the machine, but the distinctions may be briefly noted. There is no link at the head of the boom, and therefore the Ledgerwood is like Vincennes. The hoisting line extends from the top of the vertical mast of the machine, there being no leaning mast as in the patent of the Vincennes and cornfield machine, out over the end of the boom, and down to the stick, two parts of the hoisting line only acting upon the head end of the stick. The manner of attachment of the hauling line to the scoop is not distinguishable in the photograph which we have. The scoop is carried by bail or housing member which seems similar to the corresponding bail of the Vincennes machine. The scoop is an integral scoop, freely revolving upon its attachment to the stick, the boom is movable by means of the hoisting line, the scoop is discharged by means of the dump line, and outswung by the three elements of effort as described in the Vincennes machine.

This Ledgerwood machine is further from Clutter in that there is no link at the head of the stick. In all of these machines the direction of the bucket at all times is controlled by two power lines. I am referring to the Mahoney machines. Each of these power lines are controlled by a different man. So that if you wanted to get your bucket aimed in any particular direction—to get it aimed with the mouth down to the ground, you had to have the cooperation of two separate men, unless the scoop chanced to have that aim. So far as there was election in the matter of control of it it required two men. I do not regard it as a commercially desirable machine at all. None of these Mahoney machines were capable of being controlled by one man with two hands to two power lines. None of them were capable of digging in rock or hard material.

As to one man operating them it was not possible to move the scoop in any one of the four directions with correct presentation or useful result. The right hand operator would move the point of attachment of his scoop to his stick in any one of four directions at any instant during discharge of the scoop, but he lost thereby the presentation of the scoop. It would be a futile movement

so far as performing any of the useful functions of the Clutter machine is concerned, except by the other operator following with him and cooperating to renew the presentation. It should be mentioned in connection with the last three Mahoney machines that of course since there is no strut at the rear of the scoop, the scoop would revolve over any obstacle encountered in its travel through the material.

Referring to Fairbanks patents 892,508 and 1,056,268, and to the machines illustrated in Defendant's Exhibit 31 and at page 46 of Defendant's Exhibit 30, I will compare these machines in structure, mode of operation and results with the Clutter machine of the Clutter patent. Referring first to the machine of patent 892,508, there is a boom of fixed elevation, staid, attached to the mast by rods or rod 16, a stick slidably mounted at the outer end of the boom for up and down movement and supported by either a power-actuated line, apparently 31 in the chart which we have, or by another line which extends from the lower end of the stick over a sheave and down along the boom to a small cable drum having a brake wheel associated with it for fixing the line. Another control line extending from the upper end of the stick and passing under a sheave at the outer end of the boom, thence down the boom to one in opposite in direction upon the same small control drum. Another line passing from the scoop to the machine. The major lines referred to are the last named, number 56 in the patent, and the line 31; the other two are positioning lines not actuated by power. The scoop is of the integral type, pivoted at its approximate middle to the lower end of the scoop, the rear end of the stick being attached by a short course of chain and hooked upon the foot or near the foot of the stick. The line 31 extends down along the stick and is attached at the front end of the scoop, and in lifting it it operates to hold the scoop in the position shown in Fig. 1 of the patent, the chain 53 being taut. In operation the scoop is drawn towards the machine with, as might be desired the lines to the small control drum 40 tight or not tight, according to whether the operator desires to prevent the scoop from either digging in too deeply or being forced up out of engagement, for filling the scoop. The scoop is then swung about to a position for discharge and the brake is set—the brake 40 is set to prevent revolution of the small drum and hence to prevent falling of the stick and scoop, the weight

being carried by the small line which passes over the end of the boom and down to the foot of the stick. The elevating line 31 is then relaxed and the scoop allowed to invert, principally by gravity, and the weight of the bail, of course, assisting.

The principal distinction in structure between this machine and that of Clutter is that in Fairbanks the boom is in fixed elevation, whereas in Clutter it is pivotally mounted. The elevating line 31 of Fairbanks performs a part of the function of the elevating line of Clutter in that it raises the scoop and stick, Clutter's elevating line also elevating the boom; the hauling line 56 is comparable to that of Clutter. The Clutter machine has no control line comparable to the small lines which are carried from the upper and lower ends of the stick, oppositely passing over sheaves at the outer end of the boom, and oppositely wound upon the stick-fixing drum located near the base of the boom. The performance, in distinction, is that Fairbanks is not able to operate over 180 degrees of digging travel, and hence is not capable of striking a gravity blow. His scoop could be raised and lowered during travel by unsetting and resetting of the brake wheel application of power by the hoisting line 31. The machine is not constructed for drainage work, nor single width excavation.

Q. The next one is Fairbanks patent 1,056,268, as shown in these Exhibits 30 and 31, perhaps with some slight modification. Suppose you take up the patent first and point out any differences? A. Referring to Fairbanks patent 1,056,268 as typical, and I will refer later to such distinctions as I perceive between it and the other similar machines, the digging in this machine is effected by means of the lines 22 in the patent, which is a combined hauling and hoisting line, and which passes over a dead end at the outer end of the fixed boom down about the near extremity of the cradle or bell crank stick structure, about a sheave carried at the end of the structure, and thence vertically and over a sheave in the fixed boom or low mast, and thence to the machine. There is a boom pivoted near the lower end of the fixed boom, and which is elevatable; that is, this digging boom is elevatable, and carries at its outer end the crank-like dipper stick which, in turn, carries at its lower end an inwardly projecting scoop. There is a tie or stay bar between the dipper stick proper and the machinewardly extending upper arm of the dipper stick, which, in the course of digging,

receives tension as the scoop is forced into the material. There is what is called, I believe, in the patent a gate or scraper device, 17 in the patent, pivotally mounted at or near the same point as that at which the crank stick is mounted to the boom, extending down, pendent, from that point, and sweeping the inside of the scoop; that is, having a travel which sweeps the interior of the scoop. This sweeper is attached by a chain to the lower or primary arm of the dipper stick. The bucket is inverted and discharges by inversion with the assistance of the sweeper, being inverted by a dump line 23 which is attached at the end of the dipper stick and extends over a sheave at the outer end of the fixed boom, thence to the power actuated machinery. The operation is that the scoop is lowered by means of the dump line on a brake, snubbed into correct position for the beginning of the digging stroke, that is, with the scoop in its outermost position; the haul hoist line is then wound in, the effect being to, through the crank action of the stick, exert a horizontal effort upon the stick by means of the scoop until the scoop is filled. The entire movable structure or digging mechanism is then elevated by means of the power of the haul hoist line 22 to a suitable elevation and swung about to the proper point of discharge, and the material may be discharged by setting the brake upon the dump line 23 and slacking off upon the haul hoist line 22, the boom then being again swung about over the excavation, and the structure snubbed into the hole. The function of the line 22 is analogous to that of the line 23 of Rood—E. O. Rood patent which I discussed a few minutes ago.

(Noon recess.)

(1:30 P. M. After recess.)

Mr. Richey: Before we start, we would like to let our machine go, if there is nobody that wants to have it tested out—can we?

The Court: Do you want it, Mr. Corbett?

Mr. Corbett: No, we are not interested, Your Honor.

Mr. Richey: All right, we would like to let Mr. Morrison go. You don't want him, do you?

Mr. Corbett: I don't think so.

Mr. Richey: You can release your machines, also, if you like.

Mr. Corbett: Yes, thank you.

A. (Continuing.) In Fig. 4 of this patent, the chain 17 may be seen more clearly than in that view on the chart. The chain 17 extends from the boom to the gate, and along with the chain 18, serves as a limit to the operative sweep of the stick.

The machine of this patent is not usable for striking a blow of the kind and effect of the Clutter machine. While there are but two power lines in the Fairbanks machine, they are not of similar functionalization with those of the Clutter device. The machine is not, as it appears here, usable in trench work of single width. The principal distinction, so far as digging effectiveness is concerned, is that in Fairbanks an upward exertion of the line 22 as required for forcing the scoop horizontally into the material tends to lift the boom, stick and scoop, thereby preventing the forceful engagement which is obtainable in Clutter by his allowing the weight of the boom and stick to ride the stick during its travel.

In another illustration of a machine similar to this, a blueprint, there is shown a hold-down device, marked with the letter "a" in black pencil, required in the commercial attempt to use this machine of the Fairbanks patent, for the purpose of offsetting or preventing the hauling effort of the line 22 from elevating the boom and scoop away from the work, or so relieving the engagement force of it as to tend to defeat penetration. The hold-down device, of course, introduces this disadvantage, that once set, then the path for sweep of the scoop is also set, and in this way deprives the operator of election as to the elevation of his scoop for the uprooting of boulders or the like in the course of the scoop's passage, except at the cost of first releasing and then elevating or lowering and then resetting the control device.

Q. Otherwise this machine is substantially the same as the one in the patent 1,056,268? A. That is correct.

Q. Now, the machine shown at page 46 of Exhibit 30, is that substantially the same as the one shown in the patent? A. I take that to be the same machine.

Q. Number 1,056,268? A. Yes, sir, at least as to the type. I have not examined small details of this machine.

Q. Well, look at it and see if the operation and results would be the same, and the major features are all the same. A. The scoop structure is different from the patent structure, but the functioning is very similar. There is a triangular structure in the photo on page 48

of Defendant's Exhibit 30, which does not appear in the patent illustration, but the dump line is attached by means of a sheave at the end of this structure, and the effect and functions, I would say, are comparable.

Q. When you spoke of this brake "a" of Fig. 31 being employed on the commercial machine, you meant that it would be necessary, in your opinion, to employ something of that kind to hold the boom down? A. Yes, sir.

Q. If it was used commercially? A. Such a hold-down would be required for digging anything but the very softest of materials; such a functioning of lines as is here employed.

Q. You never saw one of them operate? A. No, sir.

Q. Now, Mr. Turner also discussed in connection with the Clutter patent, the following patents: Rood, 1,057,457; Olson, 826,051; Bishop, 1,100,864; Sweet, 1,208,230, and the British patent to Jubb, 11,496. Now, will you take each of those up briefly, and instead of pointing out all the details of construction, point out the differences in operation and result as compared with the Clutter patent, and the major mechanical differences.

The Court: Have you got charts of those patents?

Mr. Corbett: We will have them picked out, Your Honor.

A. Turning first to Rood 1,057,457, and to Figs. 2 and 3 of that patent, in this machine there is the combined haul hoist line and the dumping line, which is also used for lowering the boom and scoop into the excavation. The cycle is not variable to regulating the depth of engagement of the scoop, due to the combination of functions in the haul hoist line. The machine is not suitable for striking the blow as in the Clutter machine. If the scoop were dropped in the position shown on the chart 7 and Fig. 2 of the patent, there would be a stiff-arm or rigid delivery of boom weight upon the scoop which, in my judgment, would not be withstood by the links G prime and G, which connect the anchoring structure of the links to the scoop. The link "g" extends from the point which, I believe, is 9, to the point 9 prime upon the scoop, and would be bent by the action of the nose of the bucket striking the material. The functions in general are not those of the Clutter machine.

Turning now to Jubb, British patent 11,496, in this machine there is a racking device for elevating and

lowering the stick at the end of the boom or fixed elevation which limits the upper range of discharge of elevation to the height which can be attained by bringing the scoop up to a distance below the outer end of the boom approximately equal to the unracked portion of the length of the stick. There is a line 6 for elevating and causing the digging movement of the stick. This has the equivalent of three power members, the digging line and the reversing racking mechanism at the end. The machine has the limitation of inability to strike a blow, for lack of ability to reach the outreaching or extending position necessary for gravity impulse in the scoop.

Olson, 826,051, and referring to the chart No. 5—

Mr. Richey: It is a drawing of the patent.

A. (Continuing.)—which is a drawing of the patent, there is shown an inward arc machine having three power lines, 14, 30 and 28, or, if the boom lifting line 14 be regarded as only adjustable from time to time, then a two power line machine having a boom of fixed elevation and therefore subject to the handicap of a fixed structure above the scoop. The scoop stick is slidably mounted through a guide carried upon the boom and secured by a clamping device 24, and which can be shifted to various points in the length of the boom over some range. The stick is free to move up and down through the collar 22, downwardly by gravity of the stick and scoop, upwardly by the combined effort of lines 30 and 28, 30 being primarily a scoop elevating line, 28 primarily a hauling line. The hauling line is comparable to the hauling line of Clutter. The scoop is of the integral variety. The door structure is not clear in the patent illustration of Fig. 1—and this patent does not appear to be in the volume which I have of the patents—yes, it is, this patent 826,051 I have now located.

The discharge contemplated in the one use of the scoop, as found by reference to Fig. 2, wherein the device is rearranged for use as an outward arc machine, is a door at the rear of the scoop.

The next is the patent to Bishop, 1,100,864, in which there is an elevating boom, a ditcher stick pivoted to the outer end of the boom, and two lines, the one attached by a link to the outer end of the boom, and the other attached to the scoop. This machine has not the capacity of extending the stick to the outreaching position for delivery of a blow of vertical sinking of an excavation.

The discharge is through a door at the end of the scoop "x" and is intended to occur at a point close to the machine.

Referring to Sweet, *et al.*, 1,208,230, we have a machine with three power lines 71 for retracting, that is, causing outreach of the stick, 84 for elevating the stick and scoop and load, and 87 for hauling the scoop in the machinewardly direction. The boom is of fixed elevation, and limits the scoop as to the dumping height and as to lateral clearance required for side swinging. The coordination or cooperation required of the lines 71 and 87 and 84, as would be required in the striking of a blow, would, in my judgment, render it not usable for that purpose.

That completes the list.

Q. Do you agree with Mr. Turner, defendant's expert, that the machine shown in the Rood patent 386,438 is the nearest like Clutter of any of those which you or he discussed? A. Yes, sir, that is my opinion.

The Court: Which one?

The Witness: Rood.

Mr. Richey: The first one this witness discussed, Your Honor.

The Court: The larger number or the small number?

The Witness: The older patent, No. 386,438.

The Court: Well, that is the one the Circuit Court of Appeals said, too, wasn't it?

Mr. Richey: Yes, sir.

Mr. Corbett: That is the one urged by the defendant in the Cleveland case, but our contention is that the Mahoney is much more clearer and much more close, and meets this patent exactly.

Mr. Richey: That is not what your expert said, he said the Rood was the best one.

Mr. Corbett: He also said, when he was calling attention to the links, that the Mahoney device was closer.

Mr. Richey: I don't think he did.

The Court: Well, the Mahoney device and Rood device were both before the Circuit Court of Appeals, weren't they?

Mr. Corbett: Not against this patent, Your Honor. The Mahoney device was not before the Circuit Court of Appeals, or the Cleveland court either, as against this

Clutter patent, because of the fact that the plaintiffs took depositions in that case to carry the Clutter patent back of the Mahoney patent, and the defendants made no effort to overcome that. Now we have overcome that, Your Honor, and that places this as a reference against Clutter, where it was not in the Cleveland case.

Mr. Richey: Well, of course, whether he has overcome it or not is a matter of argument.

The Court: Sure.

Mr. Corbett: I think Mr. Richey has admitted that the Mahoney device is earlier; didn't you admit that?

Mr. Richey: I admit that the No. 4 was earlier, but that was an abandoned experiment. That is the only one I admit is earlier.

Mr. Corbett: Well, we will argue that out later.

Mr. Richey: That is what I say; we cannot argue it out now.

Q. Now, will you look at this Plaintiff's Exhibit 26, the machine which I understand that the defendants claim was used at Joplin, Missouri, and which I understood Mr. Ferris said was nearest like the machine of the first Downie patent in suit, and compare the machine of Exhibit 26 in structure, mode of operation and results, with the machine of the first Downie patent.

The Court: You are getting now to the scoop, aren't you?

Mr. Richey: Yes, we are up to the drop bottom, too, attached to Clutter.

A. In the drawing, Defendant's Exhibit 26, the structure shown for latching the bottom is not suitable for a momentum closure. The latch piece carried upon the bottom apparently engages on the underside of the latch, and the rear end of the bottom of the scoop apparently engages also the sloping face of the latch indicated without the travel of the bottom being stopped. There is no spring to maintain the latch in digging relationship, and while this might engage if the bottom were pressed slowly into position, it would not engage that particular bottom with the force or velocity as set up in momentum closure.

The distinction as to the stick attachment to the scoop is one of the primary distinctions between this and the commercial ditcher.

Q. Well, before you pass the momentum closure, have you a sheet metal model here that you can illustrate that with? A. We have a model here, yes, sir.

Q. Do you think it is possible to close that by momentum in the ordinary operation of the ditching machine? A. No, sir.

Q. Under what circumstances would it be possible to close it by momentum, if it could be closed? A. I do not believe that that is closable by momentum under any circumstances, as shown here,—

Q. Now, you can use this model in illustrating that, if you will, (presenting model to witness). A. —because the bottom in entering its closed position must force the latch outwardly and forcibly, and that imparts a momentum to the latch which would prevent its return in time to seize the bottom before the bottom would rebound from the closed position. We have a model of aluminum in silhouette construction, in which there is a bottom and a latch made faithfully to the showing of Exhibit 26—

Mr. Corbett: Your Honor, I would like to call attention to the fact that the testimony in the case shows there was a spring-operated latch there, and that the Keystone, or Downie saw them used on there, in the depositions that were filed in this case.

Mr. Richey: You do not contend, then, that this is the machine that was used out there, shown in Exhibit 26?

Mr. Corbett: The machine is fully described in the depositions, and it describes the use of the spring-operated latch.

Mr. Richey: Well, that does not answer the question. You are putting this up here as that machine.

Mr. Corbett: That is only one of the exhibits in the deposition.

Mr. Richey: Is that the machine or not?

Mr. Corbett: That is only one of the exhibits in the case.

The Court: Well, it would not be accurate if it hasn't the spring on, and the deposition says it has the spring on.

Mr. Corbett: I just wanted to make that clear.

Q. Did the Keystone Driller Company ever manufacture or sell a scoop like that shown in this Exhibit 26? A. No, sir.

Q. The defendant produced here the drawing marked Exhibit 73-3, showing a chart marked "Bernard

Clutter Device," which is a modification of Exhibit 26, in that a compression spring is connected to the upper part of the latch marked "c", two holes are placed in the latch, and the rope 9 is placed on the latch. Did the Keystone Driller Company ever manufacture or sell any scoops like that shown there? A. No, sir.

Q. I show you the Clutter patent 1,107,899. Did the Keystone Driller Company ever manufacture or sell any scoops like that shown in this patent? A. No, sir.

Q. Did they ever make any and try them out? A. Yes, sir.

Q. And what was the result? A. The latching mechanism here shown is not usable on such a scoop.

Q. That is, it was such a failure that they didn't make and sell that scoop? A. That is right.

The Court: That is the skimmer scoop.

Mr. Richey: Your Honor, that is the one they said they put on the machine.

Mr. Corbett: Clutter said one substantially like that patent, and your own witness said that the Keystone was going to market a device like that substantially as here shown.

Mr. Richey: They handed the patent to this witness, and he said, is that the kind of machine?

Mr. Corbett: And he said yes.

Mr. Richey: We are pointing out that the whole thing is rather nebulous about this machine out there. Just as I said, one substantially alike, some of them thought it was, and some more of them said the same thing.

Mr. Corbett: It was pretty clear that it was a drop bottom scoop, wasn't it?

Mr. Richey: We don't want to argue it here.

Mr. Corbett: I guess you don't.

Mr. Richey: It was clear they couldn't operate like they said it could.

Q. Now, you started to go on and talk about the other features of this Exhibit 26, and to compare its operation and results with that of the first Downie patent. A. A clear and important distinction between the device of Exhibit 26 and that of the commercial ditcher is that in Exhibit 26 the stick is secured to the end wall of the scoop by bearings or brackets, and the scoop is fastened by supports or braces extending from the upper edge of the digging end of the scoop and converging toward the center line of the device, and attached at a point toward

the upper end of the stick. This distinction is very important in considering the potentiality of that device for the striking of the hammer-like blow with the scoop, because such portion of the stick weight as would be deliverable upon the scoop is delivered at the mid-width of the scoop upon the end wall, and would severely dish the end wall. There would be rather a springing apart of the sides of the shell of the scoop, there being, so far as this view shows, (and there being no front elevation of it) no bridging structure across the scoop shell to prevent blowing outwardly under the force of the impact the stick weight upon the rear wall. This would result in the springing action distorting the shell, and, as I believe, rendering inoperative the latch, even as a bottom retaining device, apart from my previous comment in regard to its adequacy for closure. The stick, apparently in this view a wooden stick, I would say, from the fact that the bolts are shown in dots and do not appear therefore to view or by the depositions, an eye beam stick, is torsionally resilient to the degree which would render difficult or prevent the casual undercutting, and would tend to be destructive, or cause destruction, of the stick in the employment of undercutting as commercially performed.

Q. That is, every time you would hit down on this scoop the point of contact being bowed, one place on the bucket would pull back in, and one place out? A. That is correct.

Q. And that would release the latch? A. That would cause the latch fulcrum to be carried forward a considerable distance, for the forces are very severe in this hammering blow, and even with bridge structures, and without the weight of the stick at the sides, and even with the bridging structure across the top, it is very difficult to hold the structure in operative position and condition. And the dishing action of the inplate or the bowing of it would carry the latch fulcrum ahead, and, in my judgment, would shortly destroy it, if not in one blow, then in a short series.

Q. Of course, that would not happen in the Clutter machine because there the scoop was integral and there was no latch on there? A. In the machine of the Clutter patent, you mean?

Q. Yes. A. Yes, sir, in the machine the objection does weigh because the scoop is integral, and the side walls have the bracing effect on the scoop bottom, where-

as in the ditcher scoop of such a type as this the side walls have not the bracing value from the bottom, except as transmitted through the pivots which, however, is not usable for the purpose except when the bottom is stationary or near discharge by simple inversion. The difficulty is that it tends to cause a binding of the pivots here if the side walls are bowed outwardly, and it is difficult to obtain momentum closure by any binding at this point, since the bottom, as I have explained before, is not closed by positive power action, but only by the introducing of the relatively feeble action as set up by the momentum of the bottom itself.

Q. All right; now, will you proceed, as I interrupted you. A. For the reason which I have stated, that flexure of the end wall, flexure of the side walls, or lack of bracing structure over the top of the scoop, I would not regard the device as rigid in the sense required for commercial operation by any blow action. The connection of the stick to the boom is apparently of the short pin type, which would not serve adequately for the prevention of twisting, as used in undercutting operations.

Q. However, the boom is one—I mean the stick is one solid member, instead of being built up? A. Yes, sir, and is apparently, apart from the appearance here—the inference is, of relatively narrow structure, even though, as I say, there is no front elevation by which one could determine just how the stick is made or what its members. There are no side rake teeth or rooting teeth on the device, and this would prevent the operation in trench work.

Mr. Corbett: I would like to say here, Your Honor, that in the depositions it is said by at least one or two witnesses that side rake teeth were used.

Mr. Richey: Now, if we are going to argue this matter—

Mr. Corbett: I only want the court to get this clearly as we go along.

The Court: He just called that to my attention.

Mr. Richey: Our position is that some of them said one thing and some another, and there is nothing definite about that except this one drawing.

The Court: All right.

Mr. Richey: You may proceed.

A. The absence of rooting teeth in this structure would prevent all single width work, excepting in material so soft that a scoop without any teeth could be used

for excavating it, though even then at a considerable sacrifice in power as compared to a suitably toothed scoop. Of course, it would therefore also prevent the rooting penetration of materials too hard for normal, slow motion digging, and would to some extent have a bearing upon the matter of undercutting, since undercutting is advantageously, or most advantageously, performed only in single width work. This would agree, that is, the absence of the side rake teeth in this one matter, would agree with the stick structure, and the stick scoop connection, for the same deficiency.

There would be in single width work, if the scoop were altered suitably for it, a clearance developed, there would be a severe pressing in of the sides of the scoop, that is, direct transverse collapsing pressure would be developed in the scoop walls, tending to squeeze together the sides, and since there is no bridging structure across the scoop, would further tend to have the effect of preventing momentum closure or even of gravity opening of the bottom, for that function is also performed, not positively by engine power, but only by the unbalanced weight of the bottom and boom. For lack also of the overhead bridging and bracing structure of the commercial ditcher, I believe that there would be severe flexures in the scoop shell at the corners of the scoop, due to the engagement at the one side or the other, if used commercially, and the application of hauling power at the mid-width of the scoop and a bail, as shown, the tendency of a boulder or solidly imbedded obstruction at one side would tend, not only to cock the scoop to one side, and as permitted by the twisting member type of stick, but since the bottom is not integral, that the sides would tend to cause diagonal flexure of the scoop walls, to the box-like moment. Whether this would be sufficiently destructive of the shell to be prohibitive, we can only speculate.

There would also be a closure of the scoop as illustrated by one side wall receiving upward pressure and the other a downward, as would be developed when effort was made to uproot an obstruction at one edge of the scoop. In this way the bail would be exerting an upward or machineward force at the mid-width of the scoop, and the stick would be developing an upward lift, and this would tend to cause a scissorlike movement.

The distortions occurring in the scoop body would be in fact of several varieties, diagonal in the transverse plane, and diagonal in the longitudinal vertical plane.

That completes a general summary of the structure, except as to the one point here that if a blow were delivered by teeth in this device, there would be a bowing to some extent of the braces here, which, for lack of integration of the scoop, would be somewhat severe.

Mr. Corbett: Will you show which braces?

The Witness: The scoop braces. Called scoop supports in this view.

Q. Now, assuming that a machine had been used like that illustrated in this Exhibit 73-3, chart 64, where the springs and the rope, etc., had been added to the latch, would that be an improvement over the one shown in Exhibit 26? A. No, sir, I believe not.

Q. Do either of these Exhibits 26 and this chart 64 show a commercially acceptable machine, in your opinion? A. No, sir.

Q. Will you next take up and discuss the other patents and devices that were discussed by defendant's expert Ferris in connection with the first Downie patent, which are as follows: Patent to Butler, 493,421; Davy reissue, 11,156; Pugh, 806,288; Clutter, 1,107,899; Wagner, 1,125,537; Pugh, 1,316,058; Pugh, 1,339,606; Morrison, 1,249,805; Keith, 1,315,512; Hoar, 1,322,570; Olson, 826,051; the Bucyrus bucket of defendant's Exhibits 70 and 71 and the machine shown in the American Railroad Ditcher catalog, Defendant's Exhibit 35, and compare them with the structure, mode of operation and results of the machine of the first Downie patent. Now, will you point out more particularly the differences in operation and the functions, and the major differences in construction, without going into the details of the various constructions. A. Referring first to Butler 493,421, this is a drag line scoop, not a scoop entering the combination such as the machine of the first Downie patent. The digging edge or blade of the scoop is serrated for tooth-like action upon material, and the side edges of reenforcing strips at the side so shaped at their lower edges for the purpose of improving penetrability at the edge of the scoop. The reliance placed by the patentee upon this edge is not clear, because of the use of cutter blade ahead of the scoop side. The device is not usable as a commercial ditcher scoop even with the addition of the remaining items of the combination, such as a ditcher stick and the functionalization of the ditcher. The bottom, of course, since it only opens through the rear 4/5 or so of its length, the cutter bar being in-

tegral with the side plates of the scoop, is not tiltable for the purpose of rooting, and the side bars which appear in this plan view of the scoop are not so constructed and arranged as to clear the structure of the scoop, indicating that the scoop has no use in single width excavation, nor in hard material.

Referring next to the Davy reissue 11,516, this also is a scraper bucket, similar to that of Butler just discussed, and may be closed by lowering the scoop and allowing it to rest upon its bottom. The shape of the nose of the bucket indicates it is built for penetrability of the scoop, although the use of special cutter bars ahead of the sides of the scoop indicate non-reliance upon the shaping of the nose of the bucket itself for entry to the material. This, of course, is not part of the ditching or the single width cutting machine of the type of the patent in suit. The sides of the scoop fall with the bottom; that is to say, the entire shell really falls in the discharge, only the upper portion remaining stationary with reference to the housing structure, and of course this would prevent the supplying of rooter teeth at the sides for any such work as rooting and the like. It is not of the class of the machine here in suit.

The next is Pugh 806,288. In this machine there is a scoop loosely or indefinitely mounted at the lower end of the reciprocating stick. The distinction at once apparent as prohibitive in this machine is that it has at least four or five distinguishable power members, and is not used for the purpose of the machine in suit. The bottom is closed by snagging the teeth against the above grade excavation or wall of bank as shown in Fig. 20 of the patent as reproduced in chart 22, from which I am speaking, the adaptation for snagging closure being more particularly shown in Fig. 20. In the last sentence I referred to Fig. 20 when I should have said Fig. 2, at my first mention of the chart. The machine had no single width work to perform, and would not be usable for that purpose. Of course, it has no motion beyond the plumb position of the scoop, and digs only outwardly from that, being an outward digging scoop. That is not of the class of the commercial ditching machine.

Referring next to Clutter 1,107,899, this is a scoop of the skimmer type, tried by the plaintiff company, incidentally, and not used commercially. It is not of the class of the machines here in suit, being an outwardly moving scoop, and one which moves along a straight line,

and for the excavation of materials lying above the grade or plane upon which the machine is supported. The bottom is not closed by momentum.

Referring next to Wagner, 1,125,537, this is also of the skimmer type, and is a general construction at one time considered by the plaintiff company. The one point at least or reason for citing this patent is the side tooth Z as seen in Fig. 2, a tooth carried upon the bottom of the scoop and so positioned as to cut outwardly beyond the side wall of the scoop. The error of this citation is that—or of its relevancy to a ditcher of the class here in suit—is that a tooth carried by a quadrant is not acceptable for cutting side clearance in trench work. The reason, apart from the structural disadvantage and limitation of it, is that such a tooth projecting laterally from and carried by a bottom interferes upon the side walls of the scoop when the bottom is swung down diagonally to get what may be called a running start into the ascending quadrant of its closing travel. It is necessary to have what we have called swing freedom for the bottom, that is, freedom and especially in the ditcher even more than in the skimmer, freedom for the bottom to swing at least over 180 degrees, and preferably more, this because the effort at closing may be insufficient and may be stored up and accumulated for a subsequent closing effort or manipulation of the scoop if the bottom has a swinging freedom back of its plumb position, and the manipulation may then be used to add to the stored effort.

As I have said, this is peculiarly necessary in a ditcher, because the ditcher needs to be closable at various positions or inclinations of the scoop; that is, as represented by various degrees of outreach of the scoop; whereas the skimmer only requires closure when the bottom is elevated somewhat from the horizontal, that is, sufficiently for the scoop to run down to the boom with sufficient velocity to set up the momentum necessary to effect closure with the snapping of the motion of the scoop body. This leaves, of course, then, only 45 or 50 degrees of angular range of the boom within which the bottom is desired to be closable, and hence the bottom is always standing or hanging plumb less than 90 degrees open, whereas the ditcher may be required to be closed when the bottom is hanging as much as 100 or 120 degrees open. Hence the backup freedom, the angular freedom for the running start at closure is moved back substan-

tially of the dipper. As I say, the point to this is that it just prohibits definitely the use of the side clearance cutting tooth carried up on the bottom and prevents the commercial freedom necessary for the closing of the bottom, and of course it would also prevent any such performance as what we have referred to as the rooting or scoring function for getting at exceptionally hard corner material in difficult digging.

Referring next to the patent 1,316,058, this is a drag line machine having a falling bottom closed by tension and of the hauling line 51. That is not of the class, nor usable for the purpose of, the machine of the patent in suit. It is not usable in single width. The bottom is closed by snagging the teeth 25 upon the face of the work, so it lacks that quality which we call independent closure, or restoration. The scoop does not have independence of presentation to the work; that is, it depends on the work not only for the resistance necessary to close the bottom, but for the support of the scoop, and is therefore not usable for uprooting boulders or similar material.

There are, of course, three power lines, one for elevating the boom, one for retracting the bucket, and one for hauling it machinewardly.

The next is that of Pugh 1,339,606. This is of the same general class as the Pugh patent just discussed, that is, drag line type; the scoop is lowered to the ground and the bottom is, while adaptable for snagging the teeth on the ground, is also adapted for closure by the member 49 adjoined to the bottom, and which arm exerts a closing motion, and when and as pulled by the hauling line. The point to the patent is that there is a coggle arrangement whereby the cable connection nature of the hauling bail or of the arms, rather, was braced against or away from the upper forward corner of the scoop to prevent the bottom from coming open. This machine is not of the class of the patent in suit, and is not usable in trench work of the commercial class of this machine. Of course, no boom weight can be exerted upon it, and the presentation, therefore, of the scoop is not independent of the work.

The next is Morrison 1,249,805—

Q. In connection with that, will you consider the photographs, Defendant's Exhibits 76 to 79, said to show the Morrison machine? A. These photographic views illustrate the same general type as that of the Morrison

patent. All of them, as I understand the patent, and the views in the photos, are outward arc buckets of the class used in excavating above the surface, upon which the handling machine is supported. In all of them the forward or downward portion of the scoop comprising the bottom of it and the part of the side walls is as one integral structure pivoted to the forward or rearward portion of the scoop, there being plates secured to the upper scoop and serving as hinge structures for the lower portion, and the lower one-half or shell of the scoop lines up with the upper portion according to a part of the description in the patent, and abuts closely with it; the line-up is apparent in the view of at least one of these photographic exhibits, No. 77, where the lower part of the shell is closed to the upper part.

The reference is made as suggestive of a scoop usable on a commercial ditcher or usable to produce a ditcher like the commercial ditcher here in suit—patent of which is here in suit—even though the scoop is, as I say, of the outward arc class, and not, so far as I understand the patent, or any of these views, or any of the common knowledge here in regard to it, ever been used for that purpose.

The structure of the latch is a point which makes any such adaptation prohibitive, in my opinion, and I would call attention to the slope or inclination of the engaging surfaces of the latch piece upon the lower shell and the latch carried by the upper shell, and that these surfaces are of such an inclination that a force acting upon the lower shell tending to cause opening movement would cause the latch to be pushed out by the latch piece. Such a force in the lower shell might be developed in a number of ways, two of which are notable; first as when the teeth are allowed to rest upon the ground and weight or pressure is exerted through the stick, a forced engagement of the teeth. This would cause a leverlike action on the lower shell tending to carry the lower shell away from the upper shell and produce the latch disengaging pressure to which I have referred, due to the opening component there exerted. A second instance in which such a pressure would be developed would be in any attempted momentum closure of the scoop such as might be effected if the scoop were given the correct motions, and if the lower part of the shell and upper part did not abut closely, which they do according to the patent, but not made clear in photographs as to whether

they do or do not, and which close abutment would prevent the occurrence of the interval of time then desired for the latch to fly back and seize the bottom. And if now such be supposed, and motion necessary for inducing momentum of the lower half of the shell be supposed, then the rebound of the lower shell from its contact with the upper would set up the pressure to which I have referred. The front end of the lower shell would contact upon the front end of the upper shell before any such movement had occurred as would be necessary in the commercial machine for momentum closure in the ditcher, that is, the inward arc below grade use. As I have said, there is less angular freedom needed for the bottom in the skimmer, and there is still less needed in the bottom of the outward arc type to which this scoop belongs. In the ditcher, I would think at least twice as much is required, and the structure does not permit such a freedom of the lower half of the shell, there being interference there—as I say, the front edge of the lower half and the front edge of the upper half, since the two shell sides, upper and lower, are lined with each other, so far as we can determine from the photos and the patents. There are no rooting teeth on this scoop, and of course none were needed in its use, according to the work suggested by the photos here exhibited, and the work suggested from a reading of the patent, that is, outward arc operation. Any supplying of rooting teeth for this scoop would involve some difficulties because of the location of the hauling bail and the necessity in a ditcher for having a bail which will not interfere upon a movable bottom, either when the bottom is closed, or when it is open,—open as when discharging, closed as when digging. This closes the bail down into the position which would be the only available position for side rake teeth, and then of course the lower shell is of such a depth as to make structural difficulties in the way of any such tooth structure. What was the next, Mr. Richey?

Q. The Bucyrus bucket, Exhibits 70, 71 and 72. A. Oh, yes. Referring now to Defendant's Exhibit 70, a blueprint, and Defendant's Exhibits 71 and 72, photographs, which I understand to represent structure or parts of the structure similar to the photographs—this is also, as I judge, and believe a scoop of the outward arc class as suggested by the stick mounting at the upper end of the scoop. It is somewhat on the lines of and of the type of the Bucyrus bucket, or Morrison bucket just

discussed, that is patent 1,249,805, except with a line dividing the upper and lower portions of the scoop, and has a different relationship to the bottom of the scoop. The general deficiencies are as remarked in the previous discussion. This exhibit is brought forward for illustration of a tooth carried upon the lower portion of the scoop, the tooth being carried, of course, on the same lip blade and being a part of the integral complement of teeth as the other teeth. It does not cut a clearance for the scoop, and it has been suggested that the tooth could be extended to such a point as to effect side cutting clearance for the upper part of the scoop. The objection to the tooth, whether in its present position or whether extended, is, in general, the same as that which I have suggested with reference to the mounting of the side clearance cutting tooth upon a skimmer scoop. That is, if this scoop so toothed were attempted to be used upon a ditcher, it would interfere even more quickly or at a shorter angle of moment of the bucket toward opening than was the case in the Wagner skimmer, upon the side walls of the scoop. This would not necessarily prevent the opening of the scoop sufficiently far to discharge material, especially in the outward arc use; it would be very awkward and would tend toward developing heavy shears in the bottom pivots on the ditcher, because there frequently the scoop is discharged, as we saw in the moving picture last evening, when the stick is in a fairly outreached position, and in the case of which discharge the bottom falls open impelled by the falling load more than 90 degrees, and sometimes as much as 130 or 140 degrees. This scoop shell here has no such angular freedom, and of course would not only severely stress the parts but possibly retain a portion of the load.

Q. Mr. Ferris, I believe, said that that scoop there was designed for stripping in coal mines; is that right? A. So far as I am aware, I would judge that would be the fact.

Q. Is that a use in which excavating machinery is used pretty generally? A. Yes, sir, very general.

The next is Keith, 1,315,512. I believe there is no enlargement or chart of this figure. This is a three line machine, having an integral scoop fixedly attached to the lower end of the ditcher stick. The machine is of the inward arc type. It discharges by inversion by means of a pull upon the dumping line 26. The operation of the machine, except for spot discharge, is directed to the

same class of work as that of both the Clutter and first Downie machines here in suit.

The next is the patent to Hoar, 1,322,570, cited, I believe, as a reference in the stick construction, probably of claims 7 and 8 of the first Downie patent. This is an outward machine, digs by means of a line 28 which exerts a pull upon the upper end of a lever stick, which carries at its lower end an end-dump scoop. The stick is of channel construction, an extension of the stick being also of channel construction with the flanges turned inwardly. The major or lower portion of the stick, that part carrying the most severe bending stress in the regular operation of the scoop, has channel flanges turned outwardly. The channels of course are not associated or developed here in the same combination as the combination of the patents in suit, and the machine is not of the class of the patent in suit.

The next is Olson, 826,051, cited, I believe, as being, in the opinion of defendants, the nearest in form of scoop to Clutter. I believe that is an error. This is the machine to which we have referred previously, that is, having a stick mounted to slide through a collar.

Q. It is not any more pertinent to this first Downie patent than to the Clutter patent, is it? A. No, sir.

Q. And your discussion of any one patent applies to the other patent? A. My previous remarks will apply in this instance.

Referring now to the American Railroad ditcher as shown upon Defendant's chart 63, this is an outward arc machine, used for the shallow ditching along side of railroad track beds, and has for its operation three power lines: The one for retracting the scoop toward the machine, preparatory to the excavating stroke, a major digging line extending over the scoop to the extremity of the boom, for hauling the scoop through the material, and a line for elevating and lowering the boom. It may be that the boom hoisting line is used only occasionally for readjustment of the height of the boom according to changes in the grade at the bottom of the ditch at the side of the road. On this assumption of fixed elevation of the boom, or on the first assumption, that is, that the hoisting line is used regularly in the digging cycle, it is a three power line machine. It is not of the class of the machines here in suit, and is not subject to similar duty.

Q. Referring now to the second Downie patent, the defendant's expert, Mr. Turner, discussed the following patents, some of which you have already talked about: Fairbanks, 1,056,268, Hoffmeyer, 1,385,322; Burke, 1,562,288; Bishop, 1,100,864; Bansmer, 1,064,120; Bishop, 1,103,476; and Bathrick, 1,023,356. You have examined all those patents, have you not? A. I have.

Q. None of them show the abutments or operate like or perform the functions of the abutments in the second Downie patent, do they? A. That is correct.

Q. I believe, as far as Mr. Turner would commit himself on that, that the Hoffmeyer was perhaps the best of the bunch. Will you look at that one and compare its operation with the second Downie patent? A. Referring to Hoffmeyer, 1,385,322, there is a stick fastened by a pin member or bolt extending transversely of the foot of the stick, and fastening the stick to the top of the scoop. There is also a brace containing a turn buckle, bracing the digging end of the scoop to an intermediate point in the length of the stick; there is in this machine no structure suggestive of the structure of the second Downie patent. The machine is of the same general class as the commercial ditcher of plaintiffs' patents here in suit, but otherwise the reference is difficult to treat because of remoteness.

Q. Now, I think Mr. Turner also mentioned the Fairbanks patent, 1,056,268, more particularly in this connection. You have already discussed that as a general machine. Will you compare and state whether or not it has these abutments of the second Downie patent, or their functions or operations? A. This probably is cited for the projection or strut 13 in Fig. 1 of the chart, and which is adapted to contact with the dump line 23 when the stick is drawn some distance along its machineward travel. The cable would be kinked over the standard or strut and would serve to maintain a moment of the line 23 about the point at which the stick is pivoted to the end of the boom. But as to functioning in the manner of the device of the second Downie patent, I do not believe it so functions since there is no lever action as there is in the machine of the patent.

Q. I next call your attention to Defendant's Exhibit No. 34, which I understand shows the top part of the boom and stick of one of the first Clutter machines that was made. Will you compare that in operation and in results with the second Downie patent. You may use

this sheet metal model to illustrate, if you will. A. The structure illustrated in the sketch, Defendant's Exhibit No. 34, is the structure up about the head end of the stick and outer end of the boom of the Clutter machine as it appears in the patent drawing, and as at first made. I do not know that dimensionally it is accurate to the patent drawing or to the first commercial machine; but it does illustrate a contact which occurred in a silhouette model which we have here, not apparently an exhibit. The point to the matter is that the links which connect the hoist sheave with the upper end of the stick contacts at an intermediate point in their length with their upper forward corner of the boom extension members, and thus stop at a point short of the otherwise full travel of the scoop; that is, full travel being such that the scoop will be drawn clear in against the boom, or almost against it, and prevent such travel. The occurrence of this interference does not serve any useful purpose and does not serve, in any sense, the purpose of the structure of the second Downie patent. In the second Downie patent, the contacting of the stops, that is, the stopping of angular movement as between the links or bridle and the stick, served to introduce or initiate a certain range of stick movement wherein there is a more positive and accurate control of the in and out positioning of the stick and scoop than would be available without the device and the contact; whereas, in this interference in the first Clutter machine, no such range is initiated by the occurrence of the contact, but, on the other hand, the inward movement of the stick is simply for shortening, and the range which would occur beyond prevented. The interference cannot be referred to as having a function, for it had none, being an accident, and therefore it is not possible logically to compare the function of this with the function of the machine in suit.

Q. You rectified that in the Clutter machine directly after discovery? A. Yes, sir, in the normal course, as soon as the interference became apparent, which was in the nature of a draftsman's error that curving along this—

Mr. Corbett: I think this witness is talking about a period of time when he was not with the Keystone Driller Company, and he is not qualified to talk about what they did to correct this matter.

The Court: Of course the witness must testify from his own knowledge.

Mr. Corbett: Have you any knowledge of this actually?

The Witness: I have been in charge of the designing department for a number of years and know of the occurrence.

Mr. Corbett: But you were not there when that change was made?

The Witness: I did not make the change; I know of it only as an item of the history.

Mr. Corbett: This item of history is hearsay.

Mr. Richey: I offer that in evidence as Plaintiff's Exhibit P-61, that is, the model the witness has discussed.

Mr. Corbett: Objection to the introduction of this model and the testimony relative to it, on the ground that it is hearsay.

The Court: It will go in the record.

Mr. Richey: He not only discussed the fact that it was an accident—

Mr. Corbett: He did not know whether it was an accident or not.

Mr. Richey: I say he discussed that; but he also discussed the fact that in his opinion it was not the same as the second Downie patent.

The Court: We agree with his opinion. Let it go in for that.

Mr. Corbett: Exception.

Q. Now, coming to the third Downie patent, the defendant's expert, Mr. Ferris, discussed in that connection the following patents; King, 589,565; Downie, 1,511,114; Howard, 674,417; Boehm, 999,953; Coffey, 745,329; and Robinson, 1,047,991. Will you take those up in turn and compare each one in structure, mode of operation and functions with the machine of the third Downie patent? I will add to that the construction on the Thew device shown in the exhibit. You go ahead with the patents and I will look up those exhibits and add them later.

The Witness: I believe you gave me King, 589,565.

Mr. Richey: Yes.

The Court: Do they claim that has anything to do with this third Downie patent?

The Witness: This is not the chart, Your Honor, I believe there is an error there. This is the chart of patent 579—

Mr. Corbett: Oh, they have the wrong patent.

Q. Did you find it? A. I will speak from the patent drawings, there being no chart.

Mr. Richey: Here is a copy of the patent, Your Honor, if you would like to see it.

The Court: Yes, I will follow it. This is with reference to the attachment.

Mr. Richey: What has been called the assembly or fool-proof arrangement.

The Witness: Referring to Fig. 6 of the patent, there is shown a connection between the stick and the scoop of an outward arc machine, in which bolts W-3 are employed to secure brackets W to the top wall of a scoop. The purpose of the patent is to provide for the interpositioning of variable thickness elements for adjusting the lead or presentation of the scoop. The brackets W—

Mr. Corbett: This is it. (Shows chart.)

The Witness: The brackets W are fastened by means of bolts to the dipper stick, and comparing the structure, then, as a means of fastening a stick to a scoop, with the structure of the third Downie patent, it may be remarked that, although some of the bolts are in tension, a considerable number of them, still there are bolts which are in shear, as indicating the liability of the structure to develop play between the brackets W and the stick, the connection not being wholly by way of bolts and shear, nor free from play as developed. One of the brackets, the one marked W, has a flange at the lower end of its stickward face, contacting face, tending to prevent that bracket W from sliding up along the stock. The other, however, has no such, and apparently would be free to move downward as play might develop in the hole through which the bolts U pass. The use and purpose of the scoop is of course not the same as that of the machine in suit, and it is not used here by the patentee for the same purpose as the interchangeable stick scoop structure of the patent in suit.

Referring to Downie, 1,511,114, this is one of the patents in suit referred to as a reference for the third or bail patent. In this bail construction the stick is joined to the scoop by means of bolts,—or is joined to hangers, I should say, by means of bolts, and the hangers are joined to the scoop by suitable means. The patent does not indicate whether the connection between the stick and the scoop would be by bolts or rivets, either one

being suitable; but the softening elements, whether pins or bolts are placed in shear. Of course a point to the structure of the third Downie patent is that small rivets may be placed in shear without the possibility of the development of play, bolts can hardly be so placed, unless they be given a driving fit in a reamed hole which, in turn, introduces the difficulty of injury to the bolt at insertion, and causes grave inconvenience in placing so heavy a structure as the ditcher scoop in such accurate relationship with the matching member, the stick, as to permit the insertion of such bolts. The patented structure, by using bolts which are in tension primarily, and which, by a tightening of the bolts draws the scoop with the ready means of a wrench and nut into its final position, rendering the interchange of scoops more convenient than is possible with neat drilled holes, or even loosely drilled holes must be matched up and members drawn into position, either by wrist pins or wedges, or attempting very fine action of the machine for the matching up of the holes.

It was in this machine here as shown in the first Downie patent that we developed the play upward, or from which we escaped by means of the machine of the third Downie patent. We at this time of course did not know of the possibility of using this later developed structure. The third Downie patent is subsequent in development to the first Downie, and represents a perfecting of one of the divisions of the structure entering the first machine, and the need of which was developed by the commercial use of the first machine.

Referring next to Howard, 674,417—

Mr. Corbett: There is no chart on that, I think, Your Honor.

This shows a dipper stick and scoop, and is cited for detailed construction of the dipper stick in which, in Fig. 3, four angles are used, and in Fig. 4 two channels, the section at that point; the channels of which the flanges are turned inwardly, a wooden filler being used for the spacing of the channel members. The structure is not here employed in the same combination, nor having functions similar to the stick in the combination of the commercial ditcher, although there are stresses similar to it at some phases of operation, as for instance in the twisting of the stick of the outward arc machine, which is one of its duties.

Referring next to Boehm, 999,953, and to Fig. 5, I presume, to be the reference here. There are shown channels in spaced relation also in Fig. 4. The machine is not of the class, nor the channels employed as elements in a similar combination, nor as having similar duty to that of the channels employed as elements in the combination of the patent in suit.

Referring next to Coffey, 745,329, there is a stick shown having channels inwardly facing. In one view the channels are used in composing two members of a ditcher stick as used upon a shovel dipper. The stick is not apparently joined to a boom by means of similar bearing structure, nor used in mechanism of the class of the patent in suit.

Referring to Robinson, 1,047,991, there is shown a machine employing a stick for sections as appearing in Fig. 6 are channel members, and in which wooden fillers are used. The machine is of the outward arc class.

Q. You went out the other day with defendant's experts to permit them to make some alterations or something or other with the machine out there in the Sam Davis lot that we demonstrated? A. To make an inspection of the machine, yes.

Q. What was done out there, just briefly? A. The defendants' experts took certain measurements in and about the head of the stick and outer end of the boom. I don't know in detail what measurements. Then a point of interest was the bail construction and the fastening of the foot of the stick in the bail. We removed one of the bolts which joined the stick to the bail. The hole diameter, that is, the diameter of the holes in the foot of the stick and the bail were measured. The diameter of the bolt was measured.

Q. You gave them opportunity to do everything they asked to do? A. Yes, sir.

Q. Have you figured the tension and shearing stresses on the removable bolts shown at 28 and 34 in this third Downie patent, 1,709,466? Have you ever made any estimation of that? A. Bolts 28?

Q. And 33,—I meant to say instead of 24. A. 33 is a vice bolt or clamping bolt at the foot of the stick. I have never calculated accurately the relative stresses, that is, the tension stress as compared with the shearing stress developed in these bolts in operation. Computation could be made; but I regarded shearing stresses placed upon these bolts as negligible in practice if it

should be developed. As a matter of fact, however, the bolt 33, clamping together the two vertical legs of the angles which form the reinforcement for the bail, seizes the base or foot of the stick in such a way as to prevent any actual movement; and if actual movement would occur, it would result in only a negligible shearing force upon these bolts. These bolts are so very large, and the tension stresses in the digging operation in the striking of blows are so very great, compared to the shear which might develop, that, in the matter of practical designing of the device, it is simple negligible.

Mr. Corbett: Is he talking about the machine on the Sam Davis lot now?

Mr. Richey: Talking about the machine of the patent in suit. It is the same thing.

Q. Of course, in these big machines, the big practical machines, the various stresses and strains are not ever entirely eliminated as in a scientific instrument? A. The stresses are larger and there is not the precision necessary in the same degree as in a scientific instrument.

Q. If there is a mere trace of a particular kind of force, it is regarded as negligible and practically nonexistent in a big machine? A. In nearly all elements of structure there are minor secondary forces which, while possibly calculable if important, yet are not of sufficient importance to justify calculation; and that is the case with these bolts here.

At the inspection the other day by Defendants' expert, after the measurement had been taken at the foot of the stick, I tightened the clamp bolt drawing the angles of the bail together so as to firmly grip the foot of the stick, illustrating one of the utilities of the use of the bail, and produce a strictly firm structure and the prevention of any shear until or unless this bolt 33 should by rust or by loosening permit the release of such clamping effect. The primary object of bolt 33 is not to prevent any possible rotation of the foot of the stick, for the flanges are spaced close enough that little or no movement occurs. The prime purpose of bolt No. 33 is to prevent possible outward buckling of the flanges of the stick when the scoop bail is subject to severe downward stresses from the stick. In other words, to prevent buckling of the legs of the channel.

Q. You saw the Osgood machine out there? A. Yes, sir.

Q. When you said that the strain on the corresponding bolts was tension and not shear, you of course did not mean that there might not be a trace of shear? A. There might be a trace of shearing, yes.

Q. But as far as the practical design and operation, it is negligible? A. That is precisely correct.

Q. Going back a minute to this Joplin machine as illustrated in Defendant's Exhibit No. 26, I will ask you this question: Suppose the bucket used on the machine—

The Witness: You mean Defendant's Exhibit No. 26, or chart 64?

Q. I meant 26: Suppose the bucket used on that machine had been any bucket, any skimmer bucket, that the Keystone Company ever manufactured; would you say that such a machine would operate in the same manner as you have already described that 26 would operate? A. In my opinion the same operative difficulties would be encountered, and the remarks which I have made in regard to the showing made in Defendant's Exhibit No. 26 would supply.

Q. No Clutter ditching machines equipped with any skimmer scoop ever manufactured by the Keystone Company would be capable of operating like and performing the functions of the machines of the first Downie patent? A. That is correct. No skimmer, of Keystone manufacture, or within my knowledge, would be adaptable in that combination.

Q. Referring to the fourth Downie patent, 1,716,432, in connection with that patent, the defendant's expert, Mr. Ferris, discussed the Butler patent, 493,421; the Davy patent, 508,685, and the Hemme patent, 1,233,574. Will you take up each one of those and compare it in structure, mode of operation and functions with the device of the fourth Downie patent?

Mr. Corbett: What are they, Mr. Richey? Have you charts of them?

The Witness: Referring to Butler, 493,421, I do not believe that the nose construction of this scoop is comparable in its utility or in its potentiality for the combination in a commercial ditcher with the tooth structure of the fourth Downie patent; and in my previous comments with regard to the scoop, I mentioned the fact that the nose structure here provided does not clear the sides of the scoop; has no possible utility for the purpose of rooting; does not serve in this scoop as shown, and could

not be adapted for use in a commercial ditcher for the purpose of the teeth represented in the patent.

Davy, 508,685—have you another copy of the figure, Mr. Richey, there is no chart. Could you show His Honor a figure, if he desired to look at it?

Mr. Richey: No, it is in that book there, 514,645 to Davy—no—it is 508,685—I beg your pardon.

The Witness: In this patent the plate C is bent upwardly at the sides of the scoop, and is cut upon a diagonal line and chamfered upon its inner edge for the reception of the material entering the scoop. The construction, however, is not usable in a ditcher because so far as the interfering details are concerned, which, while details are still prohibited such as this, with the plate C, where it passes up around the tooth nearest the right side of the page in Fig. 1, must form there a shoulder for which no clearance would be cut by the tooth or strap on that side of the scoop. This would prevent downward penetration unless the structure were redevised. An item of importance is the removability of the teeth for redressing, their permanence of shape; while the vertical shearing edges are not required to be redressed nearly as frequently as the horizontal penetrating edge of the tooth of the patent in suit, still it is an item for consideration and, of course, would not be nearly so feasible in this structure where the lip blade itself forms the ascending or trimmer element of the tooth structure. The scoop is, of course, not a dividing or falling bottom scoop, hence there is none of the interference or the antagonisms which are encountered in the development, and which have been overcome in the development of the fourth Downie patent as applied to the commercial ditcher.

Referring to Hemme, 1,233,574, and to Fig. 2 thereof, this shows a cut blade or nose plate for a scoop in which there is a horizontal portion 18 and a vertical portion 14. This apparently is a scraper device of some description, but presumed to be analogous to a scoop in that it separates earth. The vertical edge is not suitable for the most advantageous application of power to the rooting up of material. Of course there is no pivoted bottom or any of the combination premises, conditions or possible utilities in this structure as compared with the patent in suit.

Mr. Richey: The silhouette model referred to by the witness in discussing the Joplin machine is offered in evidence as Plaintiff's Exhibit P-62.

Mr. Corbett: We object to that model because it is irrelevant and immaterial and not properly representative of the apparatus it is intended to show.

The Court: It was admitted once before.

Mr. Richey: You do not deny it is the same as your Exhibit No. 26, do you?

Mr. Corbett: Yes, we deny it.

Mr. Richey: All right. I will have him compare it. I show you a wooden bottom side rake tooth marked Exhibit No. P-63; this is a duplicate of the first side rake teeth manufactured by the plaintiff under this fourth Downie patent, is it not?

A. Yes, sir.

Q. How long did the company manufacture them like this? A. A matter of a year or two, possibly longer. They are still furnished occasionally as repairs. The precise form of the tooth was changed in 1926 or 1927 to a structure in which the upper end of the tooth was secured to the bail pivot bolt instead of by an independent bolt.

Mr. Richey: I offer that in evidence as Plaintiff's Exhibit P-63.

Q. Did you compare this model—P-63 with the drawing of Defendant's Exhibit No. 26? A. I have not compared it accurately. I have observed it closely, but not measured the dimensions neatly.

Q. Will you make a comparison and state whether or not they are the same? (Witness does.)

The Witness: By placing the model upon the Exhibit No. 26, and noting the coincidence of the outlines I believe the model is a faithful representation of the device of Exhibit No. 26.

Q. With the exception of the absence of the fragments of the lines illustrated in Exhibit No. 26, the model is traced from that, is it not, from Exhibit No. 26? A. Yes, sir, that would be my belief.

Q. In discussing the third Downie patent, I neglected to ask you to look at the Thew device shown in Defendant's Exhibits Nos. 56, 57, 59 and 60. Will you compare that in structure, mode of operation and results with the construction of the third Downie patent? You can also use this chart No. 43.

Mr. Corbett: Your Honor, if we might interrupt a moment here, I would like to ask leave, in the event we can find and get a fact witness or so regarding the build-

ing of the Morison device and the sale of the Bucyrus bucket,—leave to present that testimony here Monday.

The Court: Any objection to that, Mr. Richey?

Mr. Corbett: The matter came to us so late that we did not have the first hand records.

Mr. Richey: I have this objection to it, Your Honor. It is not material to the case. They said they only made one Morison, and tested it out. Now we have the illustration. There was no public use of it, no use of it. How can it have anything to do with this case, assuming that the thing was tested out. He said he never went ahead with it. It is nothing but another abandoned experiment. What is the use of loading the case down with innumerable abandoned experiments that cannot have any legal effect in the case.

Mr. Corbett: It is a matter of the weight of the testimony and we would like to show that the Morison device was built and tested under actual working conditions and we would like to show that the Bucyrus buckets were built, sold and actually used, provided we can get the testimony to do so. The time is short. We may not be able to do so. We thought it might save the necessity for asking leave to take depositions.

Mr. Richey: My brother did not give me a chance to express my views about Morison. They said they made two, and they were designed for outward arc machines. This case is just loaded down with that kind of thing,—things used for years,—outward arc machines with buckets on them. Why add that? I want to get through with the case. I have some other work to do. I know that Your Honor has. There is no excuse for not having this. They had plenty of opportunity to investigate this thing. They took depositions for a year and a half, something like that; no excuse for delay. And the evidence is cumulative at best. We can go on and try this case for ever if that kind of evidence is admitted here. It is just cumulative evidence and there is no excuse for not producing it before.

Mr. Corbett: This device shows a drop bottom bucket rigidly mounted on a stick, and my recollection of the matter is that in the Cleveland case there was no reference to a prior device embodying a drop bottom bucket on a rigid stick. I think this matter is of sufficient importance, and if we can get evidence, I would like to present it. I do not see that it is going to delay the case to any extent.

Mr. Richey: The Morison bucket, as I remember it, the Morison patent was in the Cleveland case. There was a bucket with a drop bottom on a rigid stick, outward arc.

Mr. Corbett: Downie testified it will not work.

Mr. Richey: And it will not. You proved it will not. You tested it. What is the use to have witnesses down here to say it was successful when the facts show it was not? Here is the successful test in the patent law: A man takes a thing and tests it out and it is so good that he goes and uses it. The matter of success is not a matter of opinion; it is a matter of fact, what happened, and what was done afterwards. They have already proved that all they did was try this thing out and quit it. There is no better evidence of failure than that.

Take this other bucket, this Bucyrus bucket; they made only two of them for a use which was general all over the country. Why pad the case with evidence. Here was a demand for that kind of bucket; they made only two and quit. What is the use of having a man come down here to say the use was successful when we know it was not as shown by the fact that they made only two, when there was a general demand for them.

Mr. Corbett: It seems to be the law in this circuit and in the Supreme Court of the United States, if you make one and it works successfully, it is a public use or it is a successful device. You do not have to show thousands of devices in order to make it successful.

The Court: Bring your witnesses and make it very short because this case has got to be over with.

Mr. Corbett: I will make every effort to get these witnesses.

The Court: Somebody has got to go all through this. I have gone this far. I might as well get it over with and save some other court the trouble.

Q. Go ahead.

The Witness: Referring to chart 33, Exhibits Nos. 56, 57, 59 and 60, to which I have been referred—

The Court: I guess we had better adjourn now.

(Thereupon court adjourned until Monday, March 16, 1931, at 1:30 P. M.)

(On March 16, 1931, at 1:30 P. M., the trial was further adjourned until Monday, March 23, 1931. On March 19, 1931, counsel for all the parties received notice from

the Clerk that the trial was indefinitely postponed. On April 15, 1931, the Clerk notified counsel that the trial would be resumed Monday, May 11, 1931.)

(Hearing commencing May 11, 1931, the last previous hearing was on March 13, 1931.)

The Court: Do you have to go to Cincinnati on Wednesday, Mr. Williams?

Mr. Williams: No, Your Honor, we settled that case late Saturday afternoon.

The Court: Then we will not have to be disturbed about that.

Mr. Williams: No, Your Honor.

The Court: Mr. Richey, I am going to let your second expert answer that general question you wanted to ask him before, and let the other side have unlimited cross-examination after that. You may ask him in what respects he disagrees with the testimony of the first expert, and then let the other side cross-examine him as far as they want to.

Mr. Corbett: May we enter an objection to that, Your Honor?

The Court: Oh, yes, enter all objections you want.

Mr. Corbett: Shall I take that now?

Mr. Richey: You had better wait until later. We have a fact witness, who will probably take a half an hour, we would like to put on now before we put the expert on.

The Court: All right.

Thereupon, the plaintiff called as a witness, W. A. McElhany, a witness, who being first duly sworn, testified as follows:

Direct Examination by Mr. Richey.

My name is W. A. McElhany. I am 35 years of age. I reside at Conway, Pennsylvania. My present occupation is real estate and insurance, and I am also Secretary of the Borough Council of Conway. I have been Secretary of the Borough since January 1, 1928. I have held this office before during the years January 1, 1921, to May, 1923. I have been employed in the real estate and insurance business about eleven years. Before that I was employed by the Pennsylvania Railroad Company.

And prior to that time as a clerk in a grocery store. I went to work as a clerk in a grocery store March 26, 1914. I also did delivery work at that time. I would say that Conway, Pennsylvania, was a town between 1000 and 1200 in the year 1914. I remember just one occasion on which a machine was digging a sewer in Conway. That was shortly after I began to work in a grocery store. I am able to fix that date because I have always kept a memo of the dates when I began and when I ended a position with any one, and not changing very often, I remember them all. I remember the date of the digging of the sewer because when I was delivery clerk we had a horse and wagon, and the streets were torn up quite a bit, and I had a lot of delivering to do by carrying. That is, on the streets where they were digging the sewer. The machine that dug this sewer, I suppose you would call it a ditch digging machine. I had seen steam shovels before that time. The particular difference I noticed between this machine and the ordinary steam shovel was that the shovel on this machine worked towards the machine, whereas the other shovels I had seen worked away from it. That is, this worked like a hoe and the others worked like a shovel. I am not a mechanic. I knew Charles Eppers who worked on the machine at that time. I had known him before he worked on that machine. As I recall he fired the boiler on the machine. I did not know any one else who worked on the machine. I do not know how often I saw the machine working. I would say I saw it practically every day while it was there. As to how close I got to the machine, sometimes in the evenings —I was a young fellow, I think—I was on the machine. This machine worked on Second Avenue, which was the same street that I lived on at that time. The machine dug right past our house. I saw the machine in the day time when it was operating. They told me Mr. Markley was the contractor. I did not know Mr. Markley at that time, but I have come to know him since. I remember a little about the mechanism of the machine besides the fact that it operated as a hoe instead of a shovel. It had a steam power plant on it.

Q. I am going to show you some photographs marked Plaintiff's Exhibit P-48, consisting of four photographs. Will you look at these and state whether or not you recognize any of the people shown in the photographs and, if so, state who they are?

The Court: What is it, P-48?

Mr. Richey: Yes, Your Honor.

A. I don't know that I can identify any of the persons there.

Q. That is, on the first photograph? A. Yes, sir.

Q. Now look at the second one? A. I don't think I can in that one.

Q. On the second one; now look at the third one? A. This is Roy Rhoades.

Q. That is the boy standing by the big traction wheel? A. Yes, sir.

Q. You knew him? A. Yes, sir.

Q. Was he working in connection with the machine? A. I know he was not.

Q. Anybody else you recognize? A. No, sir.

Q. This boy you speak of lived in Conway, did he? A. No, sir.

Q. Where did he live? A. Freedom, Pennsylvania.

(Narrative continued.) In the next photograph Mr. Eppers is shown to the right. He is the fireman. Referring to the same photograph P-48 I recognize the houses and surroundings. This house is at the corner of Second Avenue and Twelfth Street. That is, the house farthest to the left on the first photograph. This house is at the corner of Second Avenue and 11th Street, Conway, Pennsylvania, that is, the house farthest to the right of the photograph. This house I recognize as being on Second Avenue, that is, the one farthest to the left. Looking at the other photographs these are the same houses. I find just part of the house where I was living at that time. It is on the third photograph, the one farthest to the left, showing the corner of the house. I recognize all the houses there, as being on Second Avenue in Conway, Pennsylvania. Looking at the machine in the photograph, it looks like the machine I saw working on the job at that time. When I saw this machine from time to time there were always other spectators around there. Mr. Markley was pointed out to me at that time. Knowing Mr. Markley now I know that he was the man who was pointed out to me at that time. I recognize this as the machine I saw there, that is, the one shown in these photographs.

Q. You said you were secretary of the borough of Conway, Pennsylvania. Have you produced any vouchers here? (Witness does.)

Mr. Richey: Do you want to see them?

Mr. Corbett: Yes, I would like to see them.

(Shown counsel.)

Witness: Yes, four.

Q. What are those four vouchers? Wait a minute. Where did you find these vouchers? A. In the borough safe.

Q. In the safe of the borough of Conway, Pennsylvania? A. Yes, sir.

Q. Who has charge of those records at the present time? A. The Secretary of the council.

Q. That would be yourself? A. Yes, sir.

Q. Who was secretary of the borough of Conway in 1914, if you know? A. Mr. Mench.

Q. What are these vouchers you have produced here?

Mr. Williams: They speak for themselves, do they not?

Mr. Richey: All right. He has already identified them. I offer these in evidence as Plaintiff's Exhibit P—What would be the numbers?

Clerk: 64 is the next plaintiff's number.

Mr. Richey: P-64, P-65, P-66 and P-67.

Q. For what work were these vouchers issued, if you know? A. For a storm sewer on Second Avenue in Conway.

Q. I show you Plaintiff's Exhibit 47, which has been produced here and offered in evidence. Look at it and state if you know what it is? A. Part of the minutes of the borough of Conway.

Q. Who has charge of those minutes? A. The secretary of the council.

Q. That would be yourself? A. Yes, sir.

Q. State whether or not you can connect any part of those minutes up with these vouchers, Exhibits P-64, P-65, P-66 and P-67; and if you can, state what parts of the items refer to the same transactions? A. On page 1 connects with this voucher for $1,625.62. The date of this voucher is April 13, 1914. The second page connects with voucher 2137, dated May 12, for $1,816.11. Page 3 connects with voucher 2165, dated June 10, 1914, for $484.50. Page 4 connects with voucher 2190, dated July 13, 1914, for $692.97.

Q. That is, you find in these minutes, Exhibit 47, the transactions to which each of the vouchers, P-64, P-65, P-66 and P-67 refer? A. Yes, sir.

Q. The numbers of the vouchers are in red ink up in the left-hand corner, are they not? A. Yes, sir.

Q. And those numbers show on the minute book, Exhibit 47? A. No, sir, they do not.

Q. How do you connect them? A. By the amount.

Q. Is that the only way you have of connecting them? A. Well, it states here what this amount here is for; and also states on the voucher what it is for.

Q. Is it customary for the borough of Conway, Pennsylvania, to pay for this work before or after it is done? A. After.

Q. Did you bring with you a profile of the work done on this job in Conway, to which you have referred? A. I did.

Q. Is that part of the records of the borough? A. Yes, sir.

Q. And is under your charge? A. Yes, sir.

Mr. Richey: Do you want to see this, Gentlemen, before I show it to him? (Shown counsel.)

Q. Will you produce a print of that profile—you can just say, "I do." A. I do.

Mr. Richey: I offer that in evidence as Plaintiff's Exhibit P—

Clerk: 68.

Mr. Richey: P-68.

Q. What does this profile show? It shows part of Conway, Pennsylvania, does it not? A. Yes, sir.

Q. What part? A. Principally the street of Second Avenue, from Fifteenth Street to Ninth Street.

Q. That was where this ditching machine worked in the spring of 1914? A. Yes, sir, on part of the—.

Q. Do you know where the machine started and where it finished the work? A. I know about where it started.

Q. About where was it? A. About Fowler Street.

Q. And where was it the work ended with the machine? A. Eleventh Street.

Q. Was that the end of the work? A. That was the end of the sewer work.

Q. I mean the sewer work. About how many lineal feet was that? A. I think—

Q. From the plan? A. From the plan (witness refers plan)—

The Court: How many is it, Mr. Richey, do you know?

A. 1650 feet.

Mr. Richey: That is near enough. That is all.

Cross Examination by Mr. Corbett.

I lived on Second Avenue 22 years. I moved there in April, 1909. I went to work in the grocery store March, 1914. I left there in March, 1917. Part of this sewer on Second Avenue was done by hand. I do not know exactly how much. I would say around two or three hundred feet. I know that much of it was done by hand. There was not any more done by hand.

Q. You noticed, did you not, that part of the work done on Second Avenue during this time you observed with an outwardly-moving skimmer scoop; or do you know what a skimmer scoop is? A. I cannot say I do know what a skimmer scoop is.

Q. Do you remember them taking off the surface of that street with outwardly moving scoop? A. Yes, sir, to grade.

Q. Referring to this voucher of April 13, will you point out the corresponding item on Plaintiff's Exhibit No. P-47? A. What is the amount?

Q. $1,625?. A. It is on the first page (shown counsel.)

Q. Are you able to tell from this voucher in connection with Plaintiff's Exhibit P-47 whether the work paid for there was done by hand or by the machine or by both? A. I can't tell from this.

Q. Can you tell about any of the other vouchers which constitute Plaintiff's Exhibits P-64, P-65, P-66 and P-67? A. As to whether—

Q. As to whether the work was done by hand or by machine? A. I can't from these minutes; but I know from being there.

Mr. Corbett: Objection, Your Honor.

Mr. Richey: Wait a minute. Let him tell what he knows.

Mr. Corbett: I asked a question. He is going beyond the question.

The Court: He has already told what he knows about it: two or three hundred feet.

Q. When was the hand digging of this sewer done? Was it before the use of the machine or afterwards or

during the operation of the back hoe device? A. Before and during.

Q. You observed, did you not, Mr. McElhany, that during the use of this back hoe device several different types of scoops were used, several different scoops were used, did you not? A. Not for digging the ditch.

Q. How much time did you actually observe this machine? Just in passing or what would you say about it? A. Well, I watched it every opportunity I got while it was there. I cannot put any definite time.

Q. You never worked on the machine at all, day in or day out; anything like that? A. No, sir.

Q. In connection with the digging of this stone sewer, do you know just what had to be done? Did they first have to take off the surface of the ground before they started to actually dig the trench? A. I don't just understand.

Q. Was the whole street repaved or paved for the first time? A. Part of it.

Q. Did you see any of those operations? A. Yes, sir, sure.

Q. Do some of the other items contained in Plaintiff's Exhibit P-47 refer to other work besides this stone sewer, or does that entire exhibit relate to the storm sewer? A. No, sir, these are general items of expense of the borough here.

Q. Do they all relate to this storm sewer? A. No, sir.

Q. Do any of them relate to the general job of paving the street? A. There is one for the engineer. (Shown counsel.) Here is one for grading, curbing and paving.

Q. Where was the item you found for paving? A. Here is one for grading, curbing.

Q. Give the page? A. You want the first one first.

Q. The first? A. On page 3. Shall I read all of the items?

Q. Just read the total amount? A. The total amount as paid was $837.46; on page 4, $4,934.84.

Mr. Corbett: That is all.

Mr. Richey: That is all.

The Court: Call your next.

Mr. Richey: Now, if Your Honor please, we took a deposition—you remember the first time Your Honor was taken sick—the deposition of Mr. Markley, by agreement here. We would next like to read that deposition.

DEPOSITION FOR THE PLAINTIFF

Taken at Toledo, Ohio.

Deposition in above entitled causes, on behalf of complainant, The Keystone Driller Company, taken on Tuesday, March 17, 1931, at 11:00 o'clock, a.m., at Room 822 Commodore Perry Hotel, in the City of Toledo, County of Lucas, and State of Ohio, before Wm. J. Fritsche, a Notary Public duly appointed and qualified within and for the county and state aforesaid; said deposition being taken pursuant to agreement of counsel appearing for and on behalf of the respective parties, formal notice of the taking of such deposition and service thereof having been waived.

SAMUEL B. MARKLEY, a witness called on behalf of plaintiff, and being first duly sworn according to law, testified as follows:

DIRECT EXAMINATION by Mr. Edgerton.

My name is Samuel B. Markley. I reside at Beaver, Pennsylvania. I am now 61 years of age and a general contractor. As general contractor my work includes excavating enterprises. I have excavated sewers, foundations, grading, general contract work, concrete work, etc. I have been engaged in this business off and on for the last four years. I have used a Keystone machine on my excavating contracts. I acquired one in 1913. It was steam propelled, with a boom that turned back and forth like this, and up and down, and it had a skimmer bucket, and you would drop it down, and then skim off the dirt. When I said the skimmer scoop goes back and forth I meant it traveled along the boom outwardly, and when you raised it, it would be dropped back. The boom would turn from left to right in a horizontal plane. I first acquired this machine in 1913 for grading streets in Rochester. I used it on that job in the fall of 1913. And then after that the next job was in Conway. The Conway job was undertaken, early April of 1914 or last of March. It was a street grading job with some sewers. Grading first, and then they put in the sewers, and they paved on top of that. When I undertook the sewer job I excavated for the sewer tile and dug a trench.

We started by hand on this job, worked a few days, and there was still frost in the ground, and Mr. Downie

come on the job and told me he had an attachment he could put on this machine that he had sold to me that would dig sewers. So I told him to send it up, and I think he sent it up the same day; Downie or Clutter, I don't know—one of them—I am sure it was Downie though, R. M. Downie, I think. The Clutter I referred to I think his first name was Roy. I am not so sure, but I think it was Roy Clutter. I think there was three or four hundred feet I suppose of this trench in Conway that was dug by hand. A small block, as near as I can remember, was dug. I used the attachment that I have previously referred to to continue the job. I think two or three blocks was excavated with the attachment quite a long time, but I think it was probably. Describing the attachment which I have previously referred to, we used the same machine that I referred to before, and took this skimmer bucket off, and attached the bucket that worked on the end of the boom; put a couple extra pieces on there and attached this on so it would go in between those two pieces, and it worked kind of on a leverage there, and we had a cable run out to the bucket to drop it down, and then we would pull it in to load the bucket, and then would raise it up and turn it around outside and pull the rope to dump it, and then it would come back again, and do the same thing. I might say that there was a stick attached on to the end of the boom, and the bucket was attached on to the end of the stick.

Q. Do you remember any further details of this machine that was used at this time? A. That is, with reference to digging this sewer?

Q. Yes. A. Why, on that same job, of course, we excavated for the pavement, that is, for to get the subgrade out, to receive the pavement, and I kind of think that we probably backfilled that ditch with the skimmer bucket. I ain't sure. We either did that or did it with a team of horses and a scoop.

Mr. Corbett: I object to that as speculative.

Q. What sort of a power plant was on this machine? A. It was a steam.

Q. Do you recall the mechanism provided at the end of the stick for controlling the movement of the same? A. Well, it was a kind of a saddle there, with a wheel on it, that the cable went through, and come back into the machine, to lift it up and down.

Q. Do you know whether or not the excavating bucket on the machine was capable of being dumped or cropped? A. Oh, yes, by pulling a rope.

Q. Do you know who operated the machine? A. O. D. Henshaw.

Q. Do you know who the fireman was? A. He had just been discharged off the railroad, and his name was Epber or something of that sort, Epber, I think.

Q. Spell it, as you recall? A. E-p-b-e-r, I think; just left the railroad company as an engineer.

Q. Do you remember whether or not any one ever visited and witnessed the work of the machine while it was in operation on this job? A. R. M. Downie for one, and I think Clutter was there on several occasions, or during the progress of this work that I understood he was there.

Q. I now hand you four photographs, copies of photographs of Exhibit P-48 introduced in evidence in this case (subject to comparison by counsel), and ask you to state, if you know, what is illustrated therein? A. That is the machine that I had reference to, that I bought in 1913, and used it in 1914 in Conway.

Q. Referring to the group of photographs, will you point out any one you recognize in those photographs? A. Well, the gentleman standing at the side here is R. M. Downie (referring to photograph marked "A"). I identify this man standing at the side as R. M. Downie.

Q. Will you please mark the letter "A" on him? A. All right. (Witness so marks photograph.)

Q. On Mr. Downie's picture? A. Yes, sir.

Q. Referring to the same photograph, will you mark the letter "B", and tell us who else you may find that you know? A. O. D. Henshaw is "B", the operator.

Q. Referring to photograph "B", do you recognize any one on this picture? A. R. M. Downie.

Q. Please mark him "A". (Witness complies.) A. And the operator is Henshaw.

Q. Will you mark him "B" again, please? (Witness so marks.) A. He is the fireman.

Q. Is there any one else there that you know? A. I don't believe I recognize them.

Q. Who is the man back of Mr. Downie? A. I can't just say. I wouldn't say for sure, but I believe probably it is this man Clutter. It looks a good deal like Clutter, but I wouldn't say for sure whether that is Clutter or not.

Q. Do you recognize any one in photograph C? A. The operator is Henshaw, the same as on the other.

Q. Will you please mark him with the letter "B"? A. (Witness so marks.) And the man here at the fire-box in the rear of the machine is Epber.

Q. Will you please mark him with the letter "C"? A. (Witness so marks.) I don't recognize this by-stander.

Q. Referring now to the photograph C, I find the name, "S. B. Markley"; is that your name, and was that your machine? A. That is my name, and my machine.

Q. Now, do you recognize the surroundings, the houses? A. I do. I do, yes.

Q. Where was this picture taken? A. Second Avenue, Conway, Pennsylvania.

Q. And referring to the photographs A and B, do you recognize the dwelling houses in the background? A. On the same street, yes.

Q. Referring to photograph D, do you recognize the surroundings in this picture? A. I do.

Q. And recognize the men in the picture? A. R. M. Downie.

Q. Will you please mark him "A"? A. (Witness so marks.) The operator is Henshaw.

Q. And mark him "B", please. A. (Witness so marks.) And the man at the rear there is the fireman, Mr. Epber.

Q. Please mark him "C". (Witness so marks.)

Q. Do you know who the child was sitting on the pile of brick? A. No, I do not.

Q. Where was this picture D taken? A. That was on Second Avenue, Conway.

Q. Referring now to the photographs A and C, I call your attention to an automobile in the background. Do you know whose machine this was? A. That is my machine; automobile.

Q. What make of automobile was this? A. That was a Michigan.

Q. Do you recall when you disposed of this car? A. In the summer of around—as near as I can tell, around July, 1914; end of July, '14.

Q. Now, do those photographs, A, B, C and D, illustrate the trench that you have previously referred to as being dug in Conway? A. They do.

Q. And this machine actually dug the trench and completed the job upon the same? A. Yes.

Mr. Edgerton: The photographs, A, B, C and D, formerly referred to by the witness, are now handed the notary with the request that they be marked for identification "Plaintiff's Exhibits P-48-A, B, C, and D."

Q. Was the use of this machine in digging the ditch in Conway successful?

Mr. Mahoney: Objected to as leading.

(Narrative continued.) The use and operation of this machine eliminated hand operators on this ditch. I would say that by using this machine we saved about 10 or 15 men around there; 10, 12 or 14. After this Conway job I used this machine for digging ditches with the digging attachment in Midland, and various towns after that in the next three or four years. And the machine I used was the same machine with the same attachments. After that I sold it to a couple of Italians in Portland, Maine; shipped it to them with bill of lading attached, and they never had seen the machine. Bought it right out from me.

Q. Did you ever hear whether or not the purchasers of this machine with the trench attachment used it?

Mr. Corbett: Objected to as calling for hearsay evidence.

A. Yes; Mr. Henshaw told me that the machine was still in operation two years ago.

(Narrative continued.) I was paid for excavating and grading and trenching on this job at Conway. I am the Samuel B. Markley who testified in the Keystone Driller Company vs. The Byers Machine Company suit by deposition in 1927.

Q. Do you recall in that deposition of examining the checks which were produced at the deposition, and which you there identified as being checks in payment for this work at Conway?

Mr. Corbett: Objected to as calling for secondary evidence. The deposition in the Cleveland Byers suit has no bearing on this situation, and the originals of these checks are the best evidence of the checks.

A. I do.

Q. I now hand you a photograph, and ask you to state, if you know, what it is?

Mr. Corbett: We object to the question as obviously calling for the introduction of secondary evidence.

A. That is the checks that I was paid for this work that you just mentioned at Conway.

Mr. Corbett: The answer is objected to as obviously untrue. The photograph of the check is not a check.

Q. In your previous answer you have stated these are the checks. You mean these are a photograph of the checks, do you not? A. This is a photograph of the checks, yes, sir.

Q. Do you recall being paid by check for this work? A. I do.

Q. And was it the practice of the Borough of Conway to pay in advance, or after the work was completed?

Mr. Corbett: Objected to on the ground that the witness is not qualified to state the practice regarding the Borough of Conway.

A. They give me an estimate the first of each month for work completed; the work done during that month was paid for within ten days, in the previous month.

Q. And you know of your own knowledge that you had completed certain portions of the work before you were paid for the same? A. Yes, indeed.

Q. Now, referring to the photographs, will you please read the numbers of the checks, the dates, and the inscriptions on each of these checks, taking them in the order from the top of the page downward?

Mr. Corbett: Objected to, as an obvious attempt to introduce secondary evidence into this record, and notice is given that a motion to strike this evidence from the record will be made at the proper time.

Mr. Edgerton: I will withdraw that question. The photograph illustrating the checks to which the witness has referred in his preceding testimony is hereby offered in evidence as "Plaintiff's Exhibit P-64."

Mr. Corbett: Objected to on the ground of secondary evidence.

Q. Do you remember the character of the soil you encountered on this Conway job? A. It was clay soil.

Q. Did you have any difficulty in the mud moving the machine? A. Why, when we had wet days we put blank under the machine.

Mr. Edgerton: That is all.

CROSS EXAMINATION by Mr. Corbett.

At the time I had this Conway job it was the only job I had there at that time. I was the general contractor on the job. As to how many men I had working for me, they was paving at the same time, you know, and sewer and all, to save time, preparing for pavement. Well, I suppose I had—well I had a quarry, you know, where I got stone out of—I suppose 15, 20 men. I reckon it was—must have been—around a twenty thousand dollar job; I couldn't answer that correctly. I should imagine it was a fifteen thousand dollar job. I had about 7 or 8 squares of paving, besides the curbing and the sewers to put in; I couldn't answer that correctly. I have done so many jobs since then, but I imagine around fifteen or twenty thousand dollars.

Q. You say you had about seven or eight squares. Do you mean one side of a street or one side of a square, is that what you mean, or all around the square, or what? A. No, just block; that is one block, you know, street block; seven or eight blocks, like you start up this street and go up one street to the other, seven or eight.

Q. You had seven or eight blocks? A. Yes.

Q. And before you started in there, had those blocks been paved before? A. No, they had not.

Q. Had never been paved before? A. No, sir; not curbed, either.

Q. About how long did it take you to do that job? A. I imagine I was on there around three months.

Q. Around thre months? A. Hardly three months; run about two months or two months and a half.

Q. And you used the skimmer first; is that the idea? A. For grading, yes.

Q. That is, you took the top off the street with the skimmer; is that the idea? A. I think I did, yes. We generally take that off. It saves that extra digging. I don't know whether I did at that time, but I imagine I did.

Q. How long were those blocks there, do you know, or could you say? A. Oh, I imagine they run from—a block runs from two or five hundred feet. I don't know just what them was. Some of the cross blocks was shorter and some of the others was longer, and some of them might have run longer than that; I couldn't say.

Q. Well, did you have to dig a trench for the sewer the full length of those seven or eight blocks? A. No;

I did not; just on the one main street there, Second Avenue. That run—I think that was four blocks.

Q. And you dug part of that trench by hand, is that right? A. We started in by hand.

Q. You had a lot of other things to attend to on that job besides watching that ditching machine, didn't you? A. Oh, I was generally—I had two foremen, and I was superintendent of the work myself.

Q. How much did you actually see that ditching machine work? A. Oh, I would see it—passed it and worked to the end of it for I couldn't say how many dozen times a day, you know. It was in my sight practically all the time.

Q. Stand and watch it for any length of time? A. Oh, I would stop and see them move back, and see that they was putting the sewers in right, and instructing my foreman what to do.

Q. Do you remember how many feet of this trench was dug by hand? A. Oh, I couldn't say; around one hundred and fifty to three hundred, around in there; I wouldn't say. I couldn't really say, to tell you the truth, that is correct; but there was one hundred or two hundred feet, or maybe three hundred, or might have been only one hundred and fifty, but I know we started that way.

Q. And did you finish that way, too? A. No. I didn't. I finished with the ditcher.

Q. Now, you said that you used the machine at Conway, and then you took the machine to Midland? A. Yes.

Q. Isn't it a fact that you didn't have any ditching at Midland? A. I had three miles in one job, outside of some other jobs besides.

Q. In ditching? A. Yes, sir.

Q. Well, who did the ditching for you? A. How is that?

Q. Who did the ditching for you at Midl[illegible] A. How do you mean?

Q. Did you do the ditching with this machine? A. Yes, every bit of it.

Q. Who did it for you? A. What?

Q. Who run the machine? A. I had several operators on it.

Q. Wasn't Henshaw the only operator? A. He was a part of the time, my recollection the first job I had.

Q. Well, if Mr. Henshaw testified that the ditcher, that this particular ditcher was never used at Midland,

you would say he was right, wouldn't you? A. No, I wouldn't. I would say he was wrong.

Q. That is, with the ditcher scoop on? A. With the ditcher scoop I used the same tools. We just finished the job, at the time I shipped it away.

Q. When was this Midland job? A. Well, we worked in Midland for five years.

Q. Well, if Mr. Henshaw said that after the job at Conway the ditching device was taken off and put in the warehouse, you would think that he ought to know about that, wouldn't you? A. No.

Q. He would not? A. No, sir.

Q. Do you know just what date the Midland job started? A. Indeed, I couldn't tell you. I worked there for five years. I went down and done some work, and then I went away and done another job for a month or two, and then moved back, and did work on and off there for five years. I sewered the big part of the town, and paved the big part of the town.

Q. But as a matter of fact, you don't know, do you, just how soon after this Conway job this ditcher was used at Midland, do you? A. Well, I had several sewer jobs, and I used it on all of them.

Q. Well, any sewer jobs—do you know when they occurred at Midland, or how soon after the Conway job? A. Well, the big job I had there was around in '15.

Q. 1915. A. Yes, sir.

Q. What time in 1915, in the summer? A. In the summer time, yes, sir.

Q. And that is probably the job on which you used the ditcher, isn't it? A. Well, I used it several times there. Used it up to when I sold the machine. Used it every year for a couple years, and then I got a new machine after that; after I sold that, I got a new one.

Q. Now, let's see—you finished at Conway about when? A. In the summer time.

Q. Of 1914? A. Yes.

Q. And then you had another job before you went to Midland; is that right? A. No, my recollection is I moved from Midland to there; done some work and then I moved back.

Q. What work did you do when you left Conway and went to Midland? What work did you do there? A. Why, I had a small sewer job, and a paving job. Then I moved back to Monaca and done some work there, and then moved back to Midland.

Q. How long did you work at Monaca? A. Well, I worked at Monaca several months.

Q. This first job that you had at Midland, after you left Conway, how long a job was that? A. Well, I think it was several months.

Q. What street was it on? A. Well, I think they called it Rice Avenue at that time, and I think it has been changed since.

Q. You can't fix the date? A. No, I couldn't fix the date. I done so much work there, and worked there five years on and off, I couldn't just fix it.

Q. Was it in the summer, or fall? A. Well, we didn't do a whole lot of work in the spring time. When it freezes up, you couldn't do much work in the spring time.

Q. Do you think it was in 1915? A. I done some work there in 1915, and done some work there in '14, '15, '16, '17 and '18.

Q. Were there any changes or alterations made in this ditcher attachment during the first year you had it? A. No, not to amount to anything; might be some little latch. Now that I know of, but it was the same arrangement.

Q. You say a latch change? A. I say, there might have been; I don't know of any changes.

Q. You don't know whether there were any or not? A. I don't know of any changes made, it was practically the same thing when I sold it.

Q. You had some trouble with the latch, didn't you? A. Well, sometimes would break it and get a new one, but that is all, I don't know of any particular changes made on it until I sold it, and it was practically the same thing as when I sold it.

Q. After you took the machine away from Conway, did you have occasion to get a new scoop or any new parts in between the time you left Conway and the time you went to Midland? A. No. I think we got—of course, parts probably come in there. I had two different sizes, you know. I had some narrower sewers in Midland than I had in Conway, and I got a narrow scoop. This was a wide one, about three feet, and then I had one 22 inches wide, and put on this same attachment.

Q. You say the scoop you had at Conway was about three feet wide? A. Yes.

Q. As a matter of fact, you were digging a 26 inch trench there, weren't you? A. Well, you had to dig it—you have to have 6 inches on each side, to get back to put the mortar in and tamp it in.

Q. And then you had a narrower trench at Midland? A. Well, we had both sizes. I had three miles of sewer; some of it was 4 foot sewer.

Q. When did you get your other scoop; you didn't get both scoops at the same time, did you? A. No, no.

Q. When did you get your second scoops? A. I have had four or five since then.

Q. I know, but when did you get your second? A. Well, I think I got that to dig an 8 inch sewer in Midland.

Q. And what year was that? A. I think that was in the fall of '14, because I remember when I moved back it was muddy and cold; when we moved our machine back to that district, we moved it over land on just the wheels, and we had a time getting through the mud.

Q. Then the scoop which you used in Midland was a different scoop? A. No, we used both.

Q. You used them both? A. Yes.

Q. I mean on the job right after you left Conway? A. Well, my recollection is that it was a narrower ditch.

Q. And it was probably in 1915 that you again used the wide scoop in Midland; is that right? A. Well, I believe I used them both down there on the first job, too. I had different sized sewers. I have done so much there—I paved the whole darn street, and I couldn't tell just the date of each different size, but I had two different sizes or three different sizes of scoops, I think.

Q. You are not certain whether you used this particular scoop in Midland during 1914? A. I think I did.

Q. But you are not certain? A. No, not certain.

Q. Now, I wish you would examine these photographs of Plaintiff's Exhibit P-48-A, B, C and D, and state what photograph A shows as to the condition of the trench. Is that the starting of the trench? A. That is—this has been already done. Now, reaching way back here, probably it don't show, but you see here you can see where the dirt had been dug here, too. That is not the start; that is not a photograph of the work starting.

Q. You mean that the trench has been backfilled, is that what you mean? A. Well, no. You see, when you bring this out here, it goes away back here, and catches this.

Q. I am trying to find out what that shows; is that the starting of the trench, or in the midst of digging the trench, in photograph A? A. No, that is in the trench digging.

Q. Well, can you tell from this photograph—you said that you dug two and a half or three blocks with this ditcher? A. Yes.

Q. Now, can you tell from this photograph whether this is the beginning of the digging operation, or whether it is in the middle of those two and a half or three blocks of trench? A. No, this is not the beginning.

Q. That is in the middle? A. No, I don't know as it is; it is after we had started, yes.

Q. That is, of the part that you dug with the machine, with the trencher? A. Yes.

Q. With the digger—with the instroke ditcher? A. Yes, sir.

Q. Now, how about the showing in photograph B? Was that picture taken before the picture in photograph A or after; can you tell that from those surrounding there? A. That was taken after. You see here it is moved back. You see, that was done after.

Q. How shortly after? A. That was just after the photograph of the work you have.

Q. You think it was done the same day; is that the idea? A. I think; it might have been done the next day.

Q. But the same houses are in the picture; is that right? A. Yes, the same houses.

Q. Now, photograph C—was that taken after or before? A. I think that was before this, by the looks of the houses.

Q. Taken before photographs A and B? A. Yes, you see this house here is this house here (indicating), and we were going this way.

Q. Now, how about photograph D? Was that taken before or after the other photographs, or either of them? A. That was taken about one more move. You see, we got by this house; this had another move. Now, he is starting to dig here, you see.

Q. That was taken after this? A. Yes, just about one more move. It is moved back, maybe two moves; we moved back about eight or ten feet at a time.

Q. What was the depth of this trench which you dug with this instroke machine? A. That ditch was, as near as I can tell, about six and one-half feet. You see, it was a two foot sewer went in there, and naturally we would have to have three, three and a half, maybe four feet covering, to be safe to put it in; wouldn't be less than that.

Q. How much dirt was taken out altogether to make that trench, which you say, I think, was six or seven,

or seven or eight blocks long—is that what you said? A. No, no; it was about four blocks, and then there was some little bit dug off of it.

Q. About four blocks of the trench? A. Yes.

Q. How much dirt would you estimate, roughly; how many yards of dirt? A. I would have to figure it; couldn't very well estimate the cubic yards without figuring it.

Q. Well, suppose you figure that; can you do that? A. Well, say there was 2000 feet long by 4 feet wide, or 3 foot 6, by say an average of 6½ or 7 feet—be about a cubic yard a foot, probably; couple thousand yards, I suppose.

Q. Couple thousand yards of— A. Excavation.

Q. —excavation? A. Yes, sir.

Q. That is, for the whole trench? A. For the trench, yes.

Q. And that includes the amount dug by hand at the beginning; is that right? A. Yes; there wasn't much dug.

Q. Well, you said it might have been all the way from 150 to 300 cubic feet? A. Yes.

Q. And the total length of the trench was about how long, would you say? A. Well, I would say couple thousand feet. Part of that sewer was a 3 foot sewer, put in by blocks cemented together like this to form a sewer, and naturally would make more dirt because we would have to dig wider than for 3 foot; 3 foot cement block sewer, that is what it was, the biggest part of it.

Q. Well, you must remember these two and a half blocks that were actually dug by the ditcher, don't you; you said about two and a half or three blocks that were dug by the ditcher; isn't that right? A. Yes, maybe three or two and a half. I think there was four blocks in all, and we dug part of it—I couldn't just state; you know I just dug it, and didn't go back to do any measuring or anything like that.

Q. You don't know the length of any of those squares? A. No, I do not.

Q. Well, the probabilities are that you dug about a thousand yards of dirt with this instroke ditcher; is that right? A. No, more; about two thousand.

Q. Well, two thousand altogether you said for the full trench? A. Yes.

Q. And you said that a length of 150 or 200 or 300 feet— A. Well, 150 feet; that would leave 1850 yards, you see.

Q. Well, 300 feet would leave about 1700? A. Yes.

Q. But you are not sure about the length? A. No, I am not, but that is pretty close to it.

Q. Now, the device which you bought in 1913 was the skimmer scoop. That is right, isn't it, the skimmer machine? A. Yes, the skimmer machine.

Q. And you didn't buy the instroke ditcher until in 1914? A. Yes.

Q. Some time— A. Around the 1st of April.

Q. Did you try this device out before you agreed to buy it, this instroke attachment? A. Well, he priced it to me and I says, "Bring it up," and he brought it the same day when he priced it to me, and I said "I will try it out." He priced it to me, and charged it to me, and I got the bill the next day for it.

Q. He billed you before it was tried out? A. No, we tried it the same day he brought it up. Didn't take long to put it on.

Q. Do you remember when Henshaw left you to go to The Keystone Driller Company? A. I think it was around somewhere after '15, or something like that.

Q. How long did Henshaw work for you? A. Oh, he worked for me several years.

Q. How many years? A. He worked for me two or three years, I reckon.

Q. Do you know when you sold that machine to the Italians in Maine? A. Must have been around—must have been around '16; '16, I think. Either '16 or the fall of '15. I think it was '16. I wouldn't say positive about that now, but I think it was around the first part of '16; maybe it was the latter part of '15.

Q. Did you sell the ditcher attachment with that machine? A. Yes.

Q. Are you still in the contracting business? A. Yes, sir.

Q. Where are you located? A. Well, now, my office is in West Bridgewater, Pennsylvania, and my residence in Beaver.

Q. Will you briefly describe, or describe as fully as you can, the manner in which this back hoe or instroke attachment operated in digging the trench at Conway—just the motions it went through. A. Well, when they would dump it, he pulled it up and that would throw the bucket out, and it would drop down, and then he would draw in his line to fill it and then raise it again and dump it, and then come back in, and when the load was

off, that would throw the ditcher off and come down, and he would fill it again.

Q. You mean he would throw the scoop out to about the position shown in— A. Shown in A; he has the scoop loaded. Now, here in B, the scoop is emptied out here, and that drops down. The weight of this then, when he pulls on this—

Q. Weight of what? A. The weight of this part here (indicating stick), the weight of the stick and the bucket is pretty heavy, you know.

Q. Yes. A. When he drops that down, that sticks in the ground and naturally lets the pressure on here.

Q. That is, the hauling line slack, you mean? A. Yes.

Q. Or the hoisting line, I mean? A. The hoisting line. And then he pulls it with this one, and that fills it, you see, as in A.

Q. And the position shown in photograph B, is that the usual position for the starting of digging? A. Yes. There is the same condition. Already dumped now, and he is coming back.

Q. You are referring to what, now? A. Photograph D.

Mr. Corbett: That is all.

Mr. Edgerton: No redirect; deposition closed.

Deposition closed.

Mr. Edgerton: We offer the deposition in evidence, Your Honor.

Mr. Richey: We offer the deposition of S. B. Markley.

The Court: All right.

Mr. Richey: Your Honor, the defendants also took some depositions in the interim. I presume the next thing to do would be to read them as part of their case. Those depositions were taken in South Milwaukee.

The Court: How do you feel about that, Mr. Corbett?

Mr. Corbett: Your Honor, we took the depositions of about ten witnesses there to prove the sale of a drop bottom bucket, and we have attempted here to make a summary of the testimony of those witnesses. We propose, if agreeable to Your Honor and to the plaintiff, to read that summary—I think it will probably take fifteen or twenty minutes—and get it before Your Honor

in that way. We also have in that connection a moving picture, which was an exhibit in that case, which we should like to have the opportunity of showing before we finish. We are trying to make arrangements for that now. And Mr. Mahoney will read that summary, if that is agreeable.

The Court: All right. Have you got that summary written out?

Mr. Corbett: Yes, Your Honor.

The Court: Why not let me have it?

Mr. Mahoney: It is only in the rough. Maybe some of it can be cut down.

Mr. Corbett: He is going to cut it down.

The Court: All right.

DEPOSITIONS FOR THE DEFENDANTS

Taken at South Milwaukee, Wisconsin.

NOTICE OF TAKING TESTIMONY.

MR. PHILIP E. SIGGERS,
918 F Street, N. W.,
Washington, D. C.

MESSRS. RICHEY & WATTS,
1090 Union Trust Bldg.,
Cleveland, Ohio.

Attorneys for Plaintiff:

Please take notice that the defendant herein will take the testimony of the following persons:

William Bager, South Milwaukee, Wisconsin
Werner Lehman, South Milwaukee, Wisconsin
H. O. Jacobsen, South Milwaukee, Wisconsin
D. P. Eells, South Milwaukee, Wisconsin
C. A. Kelly, South Milwaukee, Wisconsin
Andrew Vahldieck, South Milwaukee, Wisconsin
N. A. McGrath, South Milwaukee, Wisconsin
Noel S. Hayward, South Milwaukee, Wisconsin
J. H. Imse, South Milwaukee, Wisconsin
M. T. Smith, South Milwaukee, Wisconsin

all of whom reside more than one hundred (100) miles from the place of trial herein, for use on behalf of the defendant at the final hearing of this cause, before W. H. Roberts, a Notary Public in and for the County of Milwaukee, Wisconsin, who is not of counsel nor interested

in this cause, at the City Hall, South Milwaukee, Wisconsin, beginning on the 29th day of April, 1931, at ten o'clock A.M., and thereafter from day to day as the taking of the depositions may be adjourned; and such testimony will be so taken in accordance with the provisions of Sections 863, 864 and 865 of the Revised Statutes of the United States and the Federal Equity Rules.

You are invited to attend and cross-examine.

CORBETT & MAHONEY,
Attorneys for Defendant.

Dated April 22, 1931.

Service of a copy of the foregoing Notice acknowledged this 23rd day of April, 1931.

RICHEY & WATTS,
Attorneys for Plaintiff.

PRINTER'S NOTE:

A like Notice was issued on behalf of the General Excavator Company and was signed by Mr. Edward L. Reed.

The following deposition was taken on behalf of both defendants, pursuant to the above notice at the City Hall, South Milwaukee, Wisconsin, beginning on the 29th day of April, 1931, at ten o'clock a.m., before W. H. Roberts, a notary public of the County of Milwaukee, Wisconsin. Counsel for all parties being present.

WILLIAM M. BAGER, a witness called by defendants, being first duly sworn, testified as follows:

DIRECT EXAMINATION by Mr. Mahoney.

My name is William M. Bager. I am fifty-one years of age. I reside at Milwaukee, Wisconsin. I am vice president in charge of engineering, manufacturing and domestic sales for the Bucyrus-Erie Company. I have been employed by this company approximately twenty-seven or twenty-eight years. I am an engineer. I graduated in 1900 from the Royal Technical Institute of Stockholm, Sweden, the degree given was civil engineer, which is the degree given all engineers graduating from this institution. I do not hold any degrees from any

other college or university. I have been engaged in engineering, manufacturing and sales work while an employee of the Bucyrus-Erie Company. In 1917 and 1918 I was either assistant chief engineer or chief engineer, I cannot recollect. I have held the position of chief engineer for this company. I am testifying under subpoenas in these cases. I am the Mr. Bager listed as one of the patentees of United States Letters Patent 1,249,805 dated December 11, 1917. The Bucyrus company built a dipper like that shown in the drawings of this patent. I recall how the company came to build a dipper of this type.

Mr. John Butler of the firm of Butler Brothers became interested in large stripping shovels such as used prior to that time principally in coal mining, for handling overburden over iron mines in Minnesota. They required a shovel which would be able to dump sticky material in cars, placed either 30 or 40 feet or thereabout above the level on which the shovel would be working or at the same level as the shovel. Mr. Butler wanted to know if the standard dipper such as furnished with the shovels up to that time would be able to handle and dump the sticky material in cars placed on the shovel level; to which question we were forced to say no. He insisted that if this type of shovel were to be used extensively in iron mining it would be necessary to design or develop a dipper which would be able to dump sticky material as mentioned above. The front dumping dipper of the type shown in Patent No. 1,249,805 was conceived that afternoon but we told Mr. Butler that we wanted some further time to consider the design of such a dipper before we were ready to make the definite statement that it would answer his requirements.

We first built a very simple wooden model and later a somewhat larger structural steel model, I believe the size of the structural steel was a two-third yard dipper. I cannot say whether Mr. Butler was given an opportunity to inspect the wooden model. The purpose of building the wooden model was to enable us to form some opinion of the practicability of the device before going to the expense of building a steel model. We were evidently satisfied with the working of the wooden model when we proceeded to build the steel model.

Mr. Mahoney: Printed copy of United States Letters Patent No. 1,249,805, dated December 11, 1917, to Morison, Bager & Kaeser, is hereby offered

in evidence and the notary is requested to mark the same Defendant's Exhibit 115.

Mr. Edgerton: The exhibit is objected to as immaterial, irrelevant and immaterial.

(Narrative continued.) I hereby produce drawing L-881 of the structural steel dipper built in accordance with Defendant's Exhibit 115. The date of this drawing is August 19, 1915, and the title of the drawing is ¾ yard front dumping dipper. The meaning of the designation front dumping dipper is that the front of the dipper or the part of the dipper to which the teeth are attached is hinged to the body of the dipper, held in digging position by a latch and that the material in the dipper is dumped by releasing the latch. As compared with the usual type of dipper for out-stroke machines, the ordinary type of dipper for out-stroke machines has a solid more or less square body with a hinged dipper door which when closed is approximately at right angles to the front of the dipper. On an out-stroke machine the front of the dipper is that portion then to which the teeth are attached, and on an instroke machine the portion of the dipper to which the teeth are attached is generally referred to as the bottom of the dipper I believe.

Mr. Mahoney: The Bucyrus Company drawing L-881, dated August 19, 1915, just produced by the witness is hereby offered in evidence as Defendant's Exhibit No. 116, and the notary is requested to so mark the same.

Mr. Edgerton: The exhibit is objected to as insufficiently proven, and as secondary evidence.

(Narrative continued.) I hereby produce photographs 2783-A, 2783-B and photographs 2733-A, B, C, D, E showing the structural steel dipper which was built in accordance with Bucyrus Company drawing L-881, Defendant's Exhibit 116.

Q. Where were these photographs taken, if you know?

Mr. Edgerton: The question is objected to as leading; the photographs 2783-B, 2733-A, and 2783-A bear indicia printed upon the parts of the machine and on the cab which indicate or suggest the answer to this question.

A. These photographs were taken at South Milwaukee.

Q. Please refer to the indicia referred to by counsel for plaintiff on some of these photographs, and explain the meaning of the indicia thereon. A. While certain parts of the machine have the word "Evansville" stenciled thereon, it does not mean that the photographs were taken at Evansville because we frequently ship experimental machines from our plant at Evansville to our plant at South Milwaukee.

Q. How did you determine that these photographs were taken at South Milwaukee? A. By the buildings.

Q. These photographs truly represent, do they, the front dumping dipper that was built in accordance with Defendant's Exhibit 116, about which you have been testifying? A. They do, as evidenced by drawing No. L-881 being shown for instance on photograph 2733-C.

(Narrative continued.) The drawing L-881 is marked on the dipper in this photograph. It is our method of identifying parts made in our structural department. Drawing No. L-881 bears order No. 18958. That drawing number appears on the dipper in photographs 2733-B, 2733-C, 2733-E, 2733-D. Referring to photograph 2733-B the gentleman shown with his hand on the dipper is Mr. Lehman of our engineering department.

Mr. Mahoney: Photographs 2783-A, 2783-B and photographs 2733-A, B, C, D and E are hereby offered in evidence as a group as Defendant's Exhibit No. 117, and the notary is requested to so mark the same.

Mr. Edgerton: Exhibit 117, and each of the photographs thereof, is objected to as insufficiently proven.

(Narrative continued.) The reason for taking photographs of Defendant's Exhibit 117 is that we always take photographs of interesting new developments. The dipper that is shown in Defendant's Exhibit 117 was tested out by the Bucyrus-Erie Company. It apparently operated satisfactorily, because we later decided to build larger dippers of the same type.

Q. You stated that this particular type of dipper was designed at the request of Mr. Butler. Did Mr. Butler ever order any of this type of dipper from your company? That is, the type of dipper shown in Defendant's Exhibits 116 and 117. A. He did not.

Q. Why did he not place an order for this type of dipper?

Mr. Edgerton: The question is objected to as improper. This witness is not qualified to testify why Mr. Butler did not order the bucket referred to.

A. Mr. Butler informed us that in laying out the work in the mine he found that he very seldom, if ever, would have occasion to dump into cars placed at the level of the shovel. His normal operation was to dump into cars placed on top of the bank, and under such operating conditions the standard type of dipper was preferable to the front dumping type.

Mr. Edgerton: Objected to as hearsay.

Q. Was this type of dipper shown in Defendant's Exhibits 116 and 117 designed to close by momentum after dumping?

Mr. Edgerton: The question is objected to as leading and as soliciting an opinion.

Mr. Mahoney: The question is withdrawn.

Q. Will you please describe the operation of the dipper shown in Defendant's Exhibits 115, 116 and 117? A. A shovel dipper has two principal functions, namely, to dig and to dump material. This dipper acts like any other dipper during the digging stroke. As I have previously mentioned, the material is dumped by unlatching the dipper front, giving it an outward motion which provides an opening for the material to fall through. After the material has been dumped the front closes by momentum.

Q. Will you describe briefly what is meant by momentum closing? A. By momentum closing I mean a pendulum action which swings the door into position where a dipper latch catches it and holds the dipper closed.

Q. Is this the usual way of closing the doors on all dippers on power shovels of various types which have dippers for digging? A. I do not fully understand the question.

Q. Is momentum closure usually resorted to in closing of dipper doors on power shovels such as outward arc machines and inward arc machines with which you are familiar after the spoil has been discharged from the dipper? A. Any shovel dipper on which the door cannot be closed by momentum would not be considered an operative dipper by any user of outward-stroke machines.

The purpose of building the experimental structural steel dipper was to ensure ourselves that the door would close by momentum which test proved that it would.

Q. Do you recall whether or not any difficulty was experienced with the latch holding on this dipper after it was snapped shut?

Mr. Edgerton: Objected to as leading.

A. We naturally went through some experimenting in order to perfect the latch mechanism and to balance the door properly to make the momentum closing foolproof.

Q. In other words, the test showed that the dipper designed in accordance with Defendant's Exhibits 115, 116 and 117 would successfully perform the purpose for which it was designed, namely, for excavating and dumping spoil when applied to power shovels of the type for which it was designed?

Mr. Edgerton: The question is objected to as leading, and I do not believe this is a proper recapitulation of the witness' testimony.

A. The test satisfied us that a dipper of this type did function satisfactorily and as a result of the test we offered to build dippers of this type in connection with inquiries for machines.

(Narrative continued.) The printed copy of United States Letters Patent 1,249,805, Defendant's Exhibit 115 gives my full name as Svante R. W. M. Bager but I only use my last two names. As far as I can remember we received several inquiries for this type of dipper shown in Defendant's Exhibits 115, 116 and 117 but we only built this type of dipper for two customers. The first dipper of this type was sold to the Chile Exploration Company whose main office is in New York, and the shovel on which this dipper was mounted was worked at Chuquicamata, Chile, South America. This company was engaged in copper mining. The reason they required this type of shovel in their mines in Chile, South America, was because they were loading into cars at the level of the shovel, and were afraid that a dipper of standard type would not properly shed the material. This dipper was installed on a 225-B shovel bought by the Chile Exploration Company from the Bucyrus Company. I am familiar with the type of shovels that are usually used for coal stripping and copper mining. The size of the dipper stick used in coal stripping and copper mining shovels,

as to length, compared to the dipper sticks used on shovels for general excavating purposes compare as follows: What is generally known as the stripping shovel carries dipper sticks ranging in length from 48 feet up to 90 feet, while what is known as a railroad type shovel or quarrying and mining type shovel carry dipper sticks seldom over 25 feet in length.

Q. Was the problem of dumping from dipper sticks of shovels owned by the Chile Exploration Company complicated by the length of the dipper stick that made it necessary to have a special type dipper, and, if so, kindly state what the company's problem was as you understood it?

Mr. Edgerton: Objected to. This witness obviously is not qualified to state what the problems of the Chile Exploration Company were or what complications they encountered.

A. The mining equipment of the Chile Exploration Company consisted principally of railroad type shovels equipped with relatively short boom and short dipper sticks. On account of operating conditions which were carefully explained to us by the engineers of the Chile Exploration Company, we agreed with their conclusion that a stripping type of shovel would be the best suited for operations in a certain section of the mine provided a dipper could be designed which would permit loading cars satisfactorily at the level of the shovel. The stripping shovel is designed for wide-range operations by which I mean that the shovel is designed to stand a considerable distance away from the bank which is being excavated in order to avoid damage due to falling rock. It is also designed to dig banks up to 50 or 60 feet in height and to dispose of the material from 90 to 100 feet from the center line of the shovel. On account of these requirements it is necessary to provide a machine with a relatively long boom and long dipper stick. The shaft mounted on the boom which manipulates the dipper stick is generally called the shipper shaft. On account of the aforementioned requirements it is necessary to locate the shipper shaft a considerable distance from the heel of the boom which brings it high up into the air. When dumping into cars at the level of the shovel the front of the dipper on account of the high shipper shaft is in a position so near horizontal that the material in the dipper remains lodged on the dipper front instead of dropping through the dipper opening. It was therefore ob-

vious in the case of the shovel for the Chile Exploration Company that unless a special dipper were designed a stripping type of shovel would not be suitable to their conditions. We solved this difficulty to the entire satisfaction of the Chile Exploration Company by furnishing them a dipper of the front opening type.

(Narrative continued.) With the front opening type of dipper the difficulty with stripping shovels which I have explained was experienced with the use of the usual type dipper in use on outward arc machines on account of the dirt laying on the dipper front was overcome by dropping that dipper front so that the dirt would become dislodged. The dipper which we furnished the Chile Exploration Company for the 225-B Bucyrus stripping shovel is shown on our drawing 35576 dated January and February, 1918. The title of the print to which I have just referred is "General drawing of 6-B front dumping dipper." The designation on the drawing "1-2145" refers to the Serial Number of the machine which was a 225-B revolving shovel. This was the type of shovel that this dipper was furnished for. The order number appearing on this drawing is 18641.

Q. Will you kindly explain how the front dumping dipper shown on drawing No. 35,576 compares with the front dumping dipper shown in Defendant's Exhibits 115 to 117, inclusive? A. The general design of the two dippers is the same; one was made of structural steel, the other of castings.

Q. Is there any difference between the shape or design of the front of these dippers? If so, kindly state what these differences in shape or design are?

Mr. Edgerton: The question is objected to. The drawing and photograph are the best evidence of what is shown therein.

A. In general the design is identical. However, the dipper shown on photographs, Exhibit 117, was made of structural steel as inexpensively as possible to demonstrate the principle of the front dumping dipper, while the dipper shown on blue print 35,576 is a heavy, sturdy all-cast dipper designed for continuous operation.

Q. Does the dipper shown in Drawing 35,576 have any corner or side rake teeth thereon?

Mr. Edgerton: Objected to as leading.

A. It had corner teeth designed for side cutting.

Q. Was this dipper designed for momentum closure after dumping?

Mr. Edgerton: Objected to as soliciting opinion.

A. It most certainly was.

Q. What size dipper was this shown in Drawing 35,576? A. Designation 6-B shows that it was a six cubic yard dipper.

Q. Was the dipper built by the Bucyrus Company in accordance with Drawing 35,576 for the Chile Exploration Company? A. As far as I know it was, because our general assembly drawings are nearly always prepared after the detail drawings have been made, checked and approved.

Q. Can you produce any photograph to show the dipper built in accordance with this Drawing 35,576? A. Photographs 3049-A, B, C and D show this dipper.

(Narrative continued.) I am able to state that the photographs show the particular dipper in drawing 35576 apart from the dipper's resemblance to the drawing, because photograph 3049-C shows order No. 18641 painted on the dipper back casting. The same order number appears on drawing 35,576. Photograph 3049-A shows the pattern number of the dipper front 35,575-A, reference to which pattern number also appears in the legend at the upper right corner of Drawing 35,576.

Mr. Mahoney: The Bucyrus drawing No. 35,576, dated January 31, 1918, entitled "General drawing of 6-B front dumping dipper," is hereby offered in evidence as Defendant's Exhibit No. 118, and the notary is requested to so mark the same.

Photographs 3049-A, B, C and D, just identified by the witness as photographs of the dipper manufactured by the Bucyrus-Erie Company in accordance with Bucyrus drawing No. 35,576, are hereby offered in evidence as a group as Defendant's Exhibit No. 119, and the notary is requested to so mark the same.

Mr. Edgerton: Exhibit No. 118 is objected to as secondary evidence and as insufficiently proven. The Exhibit No. 119, and each and singular part thereof, is objected to as insufficiently proven.

(Narrative continued.) I was never in Chile so I never saw the dipper shown in drawing 35576 in operation, but I have seen a moving picture of the dipper in operation. The showing in this moving picture was of

such a nature that I was able to identify the machine and dipper as that shown in Defendant's Exhibits 118 and 119. I do not recall the date that the dipper shown in Defendant's Exhibits 118 and 119 was manufactured and sold to the Chile Exploration Company. The type of power used on 225-B shovel for which this dipper was furnished was electric power as far as I can recollect.

Q. In your opinion is the type of front dumping dipper shown in Defendant's Exhibits 118 and 119 suitable for use on either forward arc or inward stroke shovels requiring a front dumping dipper?

Mr. Edgerton: Objected to. The question obviously calls for an opinion.

Mr. Mahoney: The witness has qualified as being an engineer of long experience and qualifications in the excavating art and certainly his opinion is admissible.

A. The dipper as shown in this exhibit is certainly suitable for forward arc shovels as demonstrated by actual operations in the field over a long period of time. I personally do not see why the digging or dumping of a dipper should be influenced by the location of the shovel as a whole, be it in front of or behind the dipper. The dipper is controlled by a digging cable and a dipper stick. The digging cable acts in the direction of the motion of the teeth and the dipper stick controls the bite that the dipper is taking into the bank. In either case the front would have to be balanced for momentum closure.

Q. In other words, it is your opinion that a dipper of the type shown in Defendant's Exhibits 118 and 119 could be used as desired upon either forward arc or inward arc shovels, is that correct? A. I would not say that the dipper built exactly to these drawings would be applicable to an inward stroke shovel because the details of same are definitely designed to suit an outward stroke shovel, but I believe that with slight modifications in the detailed design a dipper of this type can be applied to an inward arc shovel. In the designing of excavating machinery there is no unit or part which needs more careful study as far as details are concerned than the dipper because it is the one part of the machine which actually does the excavation, carries the excavated material and dumps it where and as desired.

(Narrative continued.) The dipper shown in drawing 35576 was mounted on a dipper stick in the usual way, two lugs at the bottom of the back casting were

used for anchoring it to the dipper stick end casting, while two forged braces with adjustments for altering the pitch of the dipper were used for securely anchoring the top of the dipper to the dipper brace casting mounted on top of the dipper stick. This was a rigid connection. We sold a dipper like that shown in Defendant's Exhibits 118 and 119 to the Oliver Iron Mining Co. subsidiary of the United States Steel Corporation, which dipper they expected to use in connection with some unusual stripping in connection with the consolidation of the Hull-Rust & Sellers pits at Hibbing, Minnesota. This was in addition to the one that was sold to the Chile Exploration Co. The dipper sold to the Oliver Iron Mining Company was subsequent to the sale to the Chile Exploration Company. The reason our company did not sell any more of these particular type dippers is because there are no particular advantages of this type of dipper over the standard type on railroad type or quarry and mining type shovels. On the other hand, stripping type shovels are so expensive as compared with the smaller type that they are only purchased in connection with stripping operations where the shovel is merely overcasting material or where the shovel is used for loading into cars placed a considerable distance above the operating floor of the shovel. In other words, practically all stripping shovels are dumping with the dipper in a high position under which operating conditions the standard type of dipper functions more satisfactorily than the front dumping dipper. We occasionally sell stripping shovels for quarrying where the stone or rock is dumped into cars on a level with the shovel but as rocks and stones have no tendency to stick in the dipper the slow dumping of the standard type of dipper when dumping into a car 12 or 13 feet high with the front of the dipper only at a slight inclination gives the operator better control of the dumping and of course saves the cars because the rock is eased into the cars rather than dropped a considerable distance. Were we today to receive an inquiry for shovels to handle stick material and dumping low we would unhesitatingly quote on a dipper of the front dumping type because it is the only dipper designed today which will function satisfactorily under such operating conditions.

Mr. Edgerton: The last portion of the answer is objected to as hypothetical.

Q. When you refer to front dumping type, I presume you refer to the type of dipper shown in Defendant's Exhibits 118 and 119, is that correct? A. I do.

Cross Examination by Mr. Edgerton.

G. A. Morison is vice president of the Bucyrus-Erie Company in charge of the commercial and financial department. He is one of the patentees on United States Letters Patent No. 1,249,805. He is in South Milwaukee today. The other joint patentee of that patent O. F. Kaeser died several years ago. Mr. Kaeser's position with the Bucyrus Company in 1917 was mechanical draftsman. He was exceptional in this line and I used him exclusively for layout work on designs. I could not tell you if he made the layout of drawing Defendant's Exhibit 116. My part in the layout of Exhibit 116 was that I prepared a pencil sketch from which our patent application was drawn and from which the experimental dipper was sketched. As to whether I saw drawing Defendant's Exhibit 116 made it's so long ago that I can't say that I did. I take it for granted that I did see this drawing, although I cannot make a definite statement that I did see it as in my capacity at that time I did not have sufficient time to enable me to exercise supervision over detailed designs. I did not supervise the construction of the structural steel bucket illustrated in photographs Defendant's Exhibit 117, because at that time I had no connection with the manufacturing department.

Q. Then when you allege the bucket illustrated in Photographs, Exhibit 117, was built in accordance with the drawing, Exhibit 116, you rely solely upon mark L-881 and 18958 appearing on the photograph of the bucket, and the company's practice or precedence of so marking; is that correct? A. That is not correct, because our manufacturing department was not authorized to manufacture anything or make any changes in design except as instructed by the engineering department. If any changes had to be made by the manufacturing department the engineering department would have corrected the drawings accordingly and issued revised instructions to the manufacturing department.

Q. I understand that your foregoing answer relates to your shop or factory practice; but I am asking you of your own personal intimate and actual knowledge of this drawing, Exhibit 116, and of the bucket illustrated in Exhibit 117, whether or not you can state the bucket

was built in accordance with the drawing? A. As I personally did not go into the structural shop, shear off the plates, punch the holes, heat the rivets and drive them, it is impossible for me to say that the bucket was actually built as shown on the drawing.

(Narrative continued.) Referring to Defendant's Exhibit 118 I recollect very well supervising the detailed designs of this dipper and approving the general design of the dipper before it was detailed. I did not supervise the construction of the bucket shown in Defendant's Exhibit 119 as at that time I was not directly connected with the manufacturing department. Referring to Defendant's Exhibit 117 and the part I took in the test of that bucket I would say I took very little part if any, as the design and test of that dipper was placed in the hands of one of my assistants who assumed full responsibility for perfecting the invention. I cannot answer definitely whether I saw this test or not, but I have a very vivid recollection of seeing this particular shovel in the test yard, and of discussing the minor problems that came up in connection with the test with the engineers directly responsible for carrying out the test and the development. It must be remembered it was sixteen years ago since this test was conducted.

Q. Then the observations and answers you made in direct examination regarding this test were based upon what the other people told you, is that correct? A. As I mentioned before, I believe I saw this test conducted. In any event the results of the test were discussed with me and the next steps in our development of this dipper were formulated and approved. It must be borne in mind there was nothing radically new in this development. We could have built quantities of this dipper without any test, had we been able to figure out accurately on paper the momentum closing. The test was conducted principally to determine that the front of the dipper would swing into closing position and latch upon dumping the material. Having that assurance from the engineer conducting the test I could have learned nothing further about the dipper had I actually conducted the test personally.

Q. You are not sure whether or not you saw the test conducted on the bucket, Exhibit 117?

Mr. Mahoney: The witness has given his best recollection in his previous answer and stated that he be-

lieved he saw the test, and is positive that he saw the machine in the yard.

A. I am not positive that I saw this test.

Q. Now, read XQ. 98 and kindly answer the same.

Mr. Mahoney: I believe the witness has already answered that question.

A. I do not see how I can answer this question any plainer than I did.

Q. Now, you have stated that you are not positive that you saw the test made. In direct examination you also made observations about the result of the test. Now, all I am getting at is, were these observations based upon what your engineers or those who made the test told you? A. Again I must repeat that my connection with the engineering department at that time was chief engineer or assistant chief engineer. In such a position it is obvious that I could not give personal supervision to the thousands of engineering matters which had to be handled and decided every month, and I fortunately learned years ago to trust my assistants' judgment better than my own. So that in speaking of results of tests, the opinions of and facts disclosed by the engineers in actual charge have been synonymous with my opinion as far as final results and recommendations are concerned.

Q. I don't understand your answer. Do you mean the results of the test, the opinions and facts disclosed by the engineers were the basis for your testimony in direct examination?

Mr. Mahoney: The witness' direct examination speaks for itself. This question is obviously improper in that no particular part of the witness' direct examination is called to his attention. The witness has testified that he was either chief engineer or assistant chief engineer at the time these particular tests were made and believes he saw the tests although he is not positive of the fact. I don't see how this type of cross-examination is going to get anywhere because I think the witness had answered the question several times.

Mr. Reed: In addition to what Mr. Mahoney has said, it is to be noted that counsel is evidently trying to get a yes or no answer to a question which is not capable of such an answer. The witness has stated that he believes he saw these tests conducted, but is not positive. If he saw them his conclusions are based on personal observation. He further states that he definitely

remembers discussing the tests with his assistants and formulating the next steps to be taken, so that in this manner he had direct knowledge of the tests. Under such conditions it is obvious that XQ. 98 cannot be answered yes or no.

A. The only definite answer I can give is that the basis for my testimony in regard to the test of the 2/3 yard structural steel dipper was either personal observation or consultation with the engineer in charge of the test.

Q. In direct examination in response to Q. 57 you referred to the operating conditions which were carefully explained to you by the engineers of the Chile Exploration Company. Did those engineers visit your factory? A. I do not remember.

Q. Did they convey this information to you by correspondence? A. In the sale of excavating machinery where special features are involved the manufacturer would never be able to make recommendations for special equipment unless the operating conditions were fully explained to, and understood by, the manufacturer. In the case of the Chile Exploration Company I had several interviews with Mr. Motter (title unknown) who at that time and as far as I know still acts as a go-between between the operating force in Chile and the manufacturers of equipment. The customer's engineers present their problems to Mr. Motter if they cannot themselves solve them and Mr. Motter calls in manufacturers, puts the problems before them and in such manner tries to arrive at a solution. Furthermore, we have had a number of erecting engineers, local sales representatives and engineers from our engineering department visit their mines. The negotiations for machines such as the 225-B generally extend over a period of many, many months, and I dare say that our foreign department has in their files today complete information in writing regarding the conditions which caused us to offer this front dumping dipper for their machine No. 225-B. Had we not known their operating conditions we never would have offered such a dipper.

Q. Is Mr. Motter a broker? A. No.

Q. You said he is a go-between. What did you mean by that? A. Mr. Motter is an engineer who at the time of our negotiations for this machine was, and as far as I know still is, in the employ of the Chile Exploration Company.

Q. Where is Mr. Motter located? A. In the City of New York.

(At this point an adjournment was taken to 10:00 o'clock A. M. of the next day, Thursday, April 30, 1931.)

(Thursday, April 30, 1931, 10:00 o'clock A. M., deposition session resumed.)

Q. Responsive to Q. 57 in direct examination after your comments on the problems of the Chile Exploration Company you stated "We solved this difficulty to the entire satisfaction of the Chile Exploration Company by furnishing them a dipper of the front opening type." Did the Chile Exploration Company write you or your firm any letters which caused you to base your conclusions in this manner? A. I do not now remember any letters written by the Chile Exploration Company on this subject. Were any letters written on the subject they would have been addressed to our foreign and export department, and would probably not have come to my attention.

Q. Then your opinion or observation was based on what Mr. Motter or the foreign representative of Bucyrus told you, is that correct? A. I cannot state definitely from whom I received the information as to the satisfactory operation of the dipper, but I do know that the dipper was in operation for a long period of time. I have also seen a moving picture of the shovel in operation equipped with the front dumping dipper which picture clearly demonstrates that the dipper dug the material, carried it and dumped it satisfactorily and that the door closed by momentum.

Q. Did you see this moving picture made? A. I did not.

Q. Did you ever examine the film to see whether splices were made in the same? A. I did not.

Q. Apart from viewing the moving picture referred to in your answer to XQ. 109, you have no other basis for the statement "I do know the dipper was in operation for a long period of time" except as to what you were told, is that correct? A. I have a very distinct recollection that repair parts were furnished for the dipper which would indicate that the dipper had been in service for a long period of time.

Q. Have you any invoices or bills of lading that you can produce relating to these repair parts? A. I have not, but our repair sales division has a complete record of all repair parts furnished for our machines.

Q. Referring again to Defendant's Exhibit 116, I believe you have stated that you were not sure whether or not you saw the test made on this bucket, but that you remembered seeing it in the test yard. Where was this test conducted? A. At our South Milwaukee plant in what is now our structural steel storage yard south of the structural shop.

Q. Are you acquainted with Mr. Walter Ferris? A. I am.

Q. Do you know whether or not he was ever employed by the Bucyrus Company or its successor, the Bucyrus-Erie Company? A. He was.

Q. Do you know whether or not he had anything to do with the test of the bucket illustrated in Defendant's Exhibits 116 and 117? A. I do not remember.

Q. Now, this bucket illustrated in Exhibit 119 was built from castings, was it not? I refer to the main body of the structure. A. That is correct.

Q. What were the dimensions of this bucket? A. The dimensions of the dipper referred to in Exhibit 119 are shown on blue print 35,576, Defendant's Exhibit 118.

Q. Do you know what the weight of this bucket was? A. I do not.

Q. Can you find out?

Mr. Mahoney: Objected to as immaterial.

A. The invoice for the dipper or the shipping document, or both, will undoubtedly give the weight of the dipper.

Q. Can you estimate the approximate weight of the bucket illustrated, for instance, in photograph 3049-C? A. As I recollect it a standard type 6 yard shovel dipper weighs approximately 20,000 pounds. This dipper being all cast construction probably weighed a trifle more than 20,000 pounds.

Q. The 6 yard standard dipper referred to in the previous answer weighing 20,000 pounds, is that of structural steel? A. The standard 6 yard dipper has a cast front cast back, and structural plate sides. I am not so sure of the weight of the 6 yard standard dipper, but the weight can be readily ascertained if desired.

Q. Referring again to photograph 3049-C which, as I understand, had cast side plates, would not the comparative weight of this bucket with the standard bucket be more than a trifle more in weight?

Mr. Mahoney: Objected to as immaterial. The witness has already stated his recollection of the weight of

the bucket, which he stated was a trifle in excess of the standard type.

A. While the standard bucket has plate sides it also has heavy bail lug castings attached to the side plates for anchoring the dipper bail. It has heavy top and bottom structural steel bands for reenforcing the plate sides and I doubt that the all cast construction is much heavier than the composite cast steel and structural steel construction.

Q. Do you know the length of the boom of the machine upon which the bucket shown in Exhibit 119 was used? I refer to the machine of the Chile Exploration Company. A. I cannot give you the length of this boom without referring to the records, as we have several standard booms of different lengths for each size of stripping shovel.

Q. Please read your answer to Q. 57 and state if you can approximately what you referred to when you said it is necessary to provide a machine with a relatively long boom? A. By a relatively long boom I mean a boom approximately 75 to 85 feet long.

Q. Are you prepared to state that the boom on the Chile Exploration Company's machine was substantially 75 to 85 feet long? A. That is approximately correct.

Q. Approximately how long was the dipper stick which was employed to support the bucket shown in Exhibit 119 of the Chile Exploration Company? A. As I recollect the standard front end equipment of the 225-B stripping shovel at the time this particular shovel was sold to the Chile Exploration Company was an 85 foot boom, 58 foot dipper stick, and 6 yard dipper. The records will disclose if this combination was actually furnished with the shovel.

Q. What was the weight, respectively, of the boom and of the stick to which you have just referred? A. Building shovels ranging in size from ½ cubic yard to 18 cubic yards makes it impossible for me to remember weights of shovels as a whole or of individual units and parts. We have, however, in our file complete records which I will gladly refer to and which will enable me to answer your question correctly. An offhand statement in regard to the weight of the Chile boom and dipper stick would be a mere guess.

Q. I would like to have weights of the stick and boom we have referred to, and will ask you to produce the same.

Mr. Mahoney: Objected to as being immaterial and irrelevant and outside the direct examination of this witness.

Q. Please refer to your answer to Q. 80 and state if you know what size dipper you referred to therein. A. As I recollect it, this dipper was a 6 yard dipper.

Q. Was this dipper used on an outward arc machine? A. This dipper was built for an outward arc machine.

Q. Referring to Exhibit 116 and Exhibit 118, do you know whether or not Mr. Walter Ferris supervised making either of these drawings? A. I do not remember.

Q. Did Mr. Ferris report to you? A. I at one time reported to Mr. Ferris.

Q. Did you report to Mr. Ferris at the date upon which these drawings were made? A. Mr. Ferris at one time held the position of chief engineer at which time my title was assistant chief engineer. Mr. Ferris was later made consulting engineer of the company at which time I was promoted to chief engineer. While Mr. Ferris was consulting engineer of the company and I was chief engineer we both reported directly to the president. I do not remember offhand what our titles and positions were in 1918.

Q. Do you know Mr. John Butler, to whom you have referred in your direct examination? A. I used to know Mr. Butler very well. He died several years ago.

Q. Are you now prepared with engineering data obtained from your factory records to state the length of the boom, the weight of the same, the length of the stick and the weight of the same, the weight of the bucket referred to previously as the standard bucket and as the cast bucket for the Chile Exploration Company? A. I am.

Q. Will you please do so? A. The boom furnished for the Chile Exploration Company's 225-B shovel was 80 feet long and weighed approximately 37,000 pounds. The dipper sticks were 58 feet long and weighed 33,470 pounds. The 6 yard standard dipper with plate sides weighed 19,768 pounds. The 6 yard front dumping dipper for Chile weighed 19,215 pounds.

Mr. Edgerton: Cross Examination closed.

Deposition closed.

WERNER LEHMAN, a witness called by defendants, being first duly sworn, testified as follows:

DIRECT EXAMINATION by Mr. Mahoney.

My name is Werner Lehman. I reside at 748 Michigan Avenue, South Milwaukee, Wisconsin. I am fifty-three years of age. I am chief engineer of the Bucyrus-Erie Company, South Milwaukee. I graduated from the Technicum School, Burgdorf, Switzerland, with the degree of mechanical engineer. I am testifying under subpoenas in these cases. I have been employed by the Bucyrus-Erie Company or its predecessor for twenty-five years. I have seen a dipper built in accordance with the Bucyrus Company drawing L-881, at the South Milwaukee plant. Photographs Defendant's Exhibit 117 show the experimental dipper mentioned on the drawing L-881 and tested on the 14-B shovel in the north yard of the Bucyrus-Erie plant at South Milwaukee, at that time the Bucyrus Company. I was present when these photographs were taken. One of the photographs shows my picture, that is photograph No. 2733-B. In this test the dipper was successful in excavating and unloading the dirt. The front of this dipper was closed after it had unloaded the dirt, in high position by gravity, and in any other position it closed by momentum, either shaking on the handle or hoisting or unloading the dipper. That has the effect of snapping the dipper front close, and latching it. The only man I recall besides myself that was present at this test was O. F. Kaeser who at that time was one of my assistants. There were other people at the test but I cannot remember exactly who these people were, they were shop men and officers of the company. This dipper was operated as follows. The dipper was built especially to suit request for dumping on the level of the machine into cars with large revolving shovel. Before producing a full sized dipper for this large revolving shovel it was decided to fabricate an experimental dipper suitable for one of the shovels at our disposition. The test had to show that we could dump this dipper successfully with the dipper handle in an angle of about 40 to 60 degrees from the vertical. The test dipper did show that our expectations were fulfilled. The dipper dumped clean in the positions mentioned and could be closed or latched before the next digging operation. At the time these tests were conducted on dipper Defendant's Exhibit 117 I was mechanical engineer,

responsible for the design of all Bucyrus Company products.

Q. In your answer to Q. 22 you have stated that the experimental dipper was built for the purpose of testing this type of dipper in view of a possible use of such a type of dipper on a large revolving shovel. Did the Bucyrus Company build a dipper of this type for use on a large revolving shovel, or similar to this type? A. They did.

Q. Do you recall to whom the first large dipper of this type was sold? A. The Chile Exploration Company.

Q. Do you know where the dipper was intended to be used? A. It was intended to be used in their copper mines in Chile, South America.

Q. I now hand you a blue print, and ask you to state what this blue print shows; this blue print has been introduced here as Defendant's Exhibit 118.

Mr. Edgerton: That is objected to as leading.

A. This blue print shows the general drawing of the dipper for the Chile Exploration Company.

Q. Does your name appear on that drawing? A. It does.

Q. What, if anything, did you have to do with the design or drawing up of the blue print in question? A. As mechanical engineer I was responsible for the proper design of that dipper. It followed closely the design of the experimental dipper.

Q. What type of machine was this dipper designed for? A. For a 225-B revolving shovel.

Q. Does the serial number of this particular machine show on this drawing in any place, and, if so, give the number? A. The serial number of the machine is shown on the drawing as 1-2145.

(Narrative continued.) My name is signed on the drawing as having approved the dipper appearing on blue print 35576, Defendant's Exhibit 118. The dipper was manufactured by the Bucyrus Company in accordance with the drawing Defendant's Exhibit 118. I saw this dipper after it was completed. The photographs Defendant's Exhibit 119 show the main parts and the assembly of the dipper, as manufactured in our South Milwaukee shop. The size of the dipper shown in Defendant's Exhibits 118 and 119 was 6 cubic yard capacity. This dipper was not tested out in the Bucyrus yard

before it was shipped, because we had no machine available to handle such a dipper as such machines are not fully erected in our shop. They are so large that they are only erected and tested out at the place they are to be used. The dippers shown in Defendant's Exhibits 118 and 119 had corner or side rake teeth thereon. I have indicated the location of the side rake teeth by the letter A on photograph 3049-A. The term front dumping dipper is used to distinguish this dipper from the usual bottom dumping dipper where the bottom is hinged permitting the opening of the dipper, while in the front dumping dipper the dipper front is hinged to open for the discharge of the dipper contents. I have indicated on drawing 35576 the point where the dipper front is pivoted by the word "hinge" and an arrow. The part of the dipper that is referred to as the front is shown on Defendant's Exhibit 118 as item No. 2 and is marked "dipper front." This dipper is attached to the dipper stick by four pins; two at or near the bottom of the dipper connecting with the handle end casting, and two near the top of the dipper connecting to the handle by means of two dipper braces. This is considered a rigid connection. This dipper was designed to close after unloading the spoil in the following manner. The center of gravity of the hinged dipper front is a considerable distance below the hinge pin. The face of the dipper front, therefore, creates a moment on the hinge pin which creates a swinging motion of the dipper front as soon as the center of gravity is changed in relation to the hinge pin. This momentum makes the dipper front swing and close the dipper. After the dipper front has been dumped and the dipper slammed closed by momentum it is held in such closed position by a latch. This dipper was shipped to the Chile Exploration Company I think in the year 1918. Walter Ferris was chief engineer at the time this Chile Exploration dipper was manufactured and sold.

Cross Examination by Mr. Edgerton.

Q. Did you see these photographs, Exhibit 119, taken?

Mr. Mahoney: Objected to as immaterial.

A. I do not remember being present when the photos were taken. I inspected the dipper and its parts before shipment.

Mr. Edgerton: Cross examination closed.

Deposition closed.

N. A. McGRATH, a witness called by defendants, being first duly sworn, testified as follows:

DIRECT EXAMINATION by Mr. Mahoney.

My name is N. A. McGrath. I am forty-one years of age. I reside at 2889 South Kinnickinnic Avenue, Milwaukee, Wisconsin. I am secretary and comptroller of the Bucyrus-Erie Company. I have been employed by this company a little more than twenty-four years. As secretary and comptroller I am in charge of the accounting department.

Q. Do you know what the practice of the Bucyrus-Erie Company is as to designating machines that are shipped out from the plant; do they bear any identifying mark of any kind for record purposes? A. Yes. Each machine has a serial number commonly referred to as a machine number or shop number.

Q. Is this machine shop number carried through the company's records, then, for reference as to that particular machine? A. Yes.

Q. It has been testified here that a machine bearing serial No. 1-2145 was manufactured and sold to the Chile Exploration Company. Can you produce an invoice from the records of the Bucyrus-Erie Company on the machine number above referred to showing shipment or sale of this particular machine to said company?

Mr. Edgerton: Objected to as leading.

A. If you are referring to 225-B electric shovel bearing Bucyrus Company shop No. 2145, I have.

(Witness produces invoice.)

Q. What is the number of the invoice you have just produced, and its date? A. M-56735, and its date is July 23, 1918.

Q. Who was the invoice billed to?

Mr. Edgerton: I object. The paper speaks for itself in respect to these questions.

A. Chile Exploration Company, New York, New York.

Q. Where does it show shipment was to be made to? A. Antofagasta, Chile.

Q. What is your order number and the customer's order number shown on this invoice?

Mr. Edgerton: The same objection. The paper is the best evidence.

A. Our order number 10892, and the customer's number 10583 requisition CX-10329.

Q. Will you kindly read into the record the description of the merchandise called for by the invoice? A. One 225-B knock down electric shovel No. 2145.

Q. What is the total amount of the invoice to which you have been referring? A. $78,550.00.

Q. I now refer you to Defendants' Exhibit 118, and ask you to state if the machine number shown on this exhibit corresponds with the machine number shown on the invoice? A. Yes.

Q. Do you know the purpose of the numeral that appears before the number 2145? A. No.

Q. The machine number, however, shown on blue print, Defendants' Exhibit 118, is the same as that shown on invoice M-56735, is that correct?

Mr. Edgerton: The witness has not been qualified to interpret the engineering records, and the answer could at most be only speculative; therefore, the question is objected to.

A. Yes.

Q. What is the practice of the Bucyrus-Erie Company as to the date appearing on the invoice? A. The date at the top of the invoice in typewritten form indicates the date on which the material is shipped from our plant, and the date near the bottom of the invoice indicates the date on which the invoice was mailed to the customer.

Q. Then according to invoice M-56735 the 225-B shovel No. 2145 was shipped to the Chile Exploration Company on July 23, 1918, is that correct? A. Yes.

Q. Is this a duplicate original Bucyrus-Erie Company invoice for this particular shipment to the Chile Exploration Company? A. It is the invoice prepared simultaneously with the invoice mailed to the Chile Exploration Company, and was issued by Bucyrus Company, one of the predecessors of Bucyrus-Erie Company.

Q. Is this record taken from the files of the company over which you have supervision and charge? A. Yes.

Q. Was this invoice made in the regular course of business? A. Yes.

Q. I now hand you what purports to be photostatic copy of the invoice which you have just produced, and ask you to state whether it is a true and correct copy? A. Yes.

Mr. Mahoney: The photostatic copy of invoice M-56735, dated July 23, 1918, which the witness has testified to be a true copy of the original invoice produced by the witness, is hereby offered in evidence as Defendants' Exhibit 120, and the notary is requested to so mark the same.

Mr. Edgerton: The exhibit is objected to as secondary evidence.

Q. The invoice which you have produced is the record copy from the files of the Bucyrus-Erie Company, and is necessary to be kept in your files, is that correct, for record purposes? A. Yes.

Q. That copy, I presume, you would not be willing to surrender as an exhibit to this deposition which is going to be used out of the state, is that correct? A. I would be willing to surrender this invoice if given sufficient time to make a copy for my records.

Mr. Mahoney: The photostatic copy is withdrawn in view of the witness' answer. The original is therefore offered in evidence as Defendants' Exhibit 120 in lieu of the photostatic copy, and the notary is requested to so mark the same.

(Narrative continued.) The accounts receivable ledger sheet with the Chile Exploration Company shows that the company paid invoice M-56735 dated July 23, 1918. This ledger sheet bears the identifying number "index number 63 sheet No. 1" in addition to the words "Chile Exploration Company." Entry under date of September 4, 1918, on this ledger sheet shows the payment of $78,550.00, and also the fact that 9/4 is indicated immediately to the left of the entry for the invoice.

Q. Perhaps I should have asked you first which item on this ledger sheet refers in any way to the shipment covered by invoice M-56735 by which the Chile Exploration Company was charged with the amount of the invoice? A. The entries "July 23" appearing on the third line under "1918", the entry of invoice "No. M-56735", and "1-225B-#2145" and the amount of $78,550 entered in the debit column on the ledger sheet.

Q. Then the fourth entry, as you explained, under date of September 4, 1918, on this ledger sheet indicates that the amount of this invoice, $78,550.00 was paid on that date, is that correct? A. Yes.

(Narrative continued.) This ledger sheet is the original ledger sheet taken from the files of the Bucyrus-Erie Company over which I have supervision, and the entries on the ledger sheet were made in the regular course of business and contemporaneously with the transactions to which they refer. I would not be willing to surrender this original ledger sheet index 63 sheet 1 as an exhibit for this deposition because it is one of the permanent records of this company. The photostatic copy of the ledger sheet just handed me I have compared with the original sheet and find that it is a true and correct copy thereof.

Mr. Mahoney: The photostatic copy of Bucyrus Company ledger sheet index No. 63, sheet 1, of the contract account with the Chile Exploration Company is hereby offered in evidence as Defendants' Exhibit No. 121, and the notary is requested to so mark the same.

Mr. Edgerton: Objected to as irrelevant, immaterial and incompetent.

(Narrative continued.) I have an invoice No. 70561 dated October 11, 1919, that shows the invoicing of the Bucyrus Company order No. 96,139 to the Chile Exploration Company of New York of a dipper front No. 35575-A. As previously testified, the date of October 11, 1919, on the invoice is the date that the shipment was made. The serial number of the shovel for which this part was intended shows on the invoice as shovel No. 2145. The total amount of the invoice is $1400.00. This is a duplicate original invoice from the files of the Bucyrus-Erie Company over which I have supervision. I am willing to surrender this original record as an exhibit if given sufficient time to make a copy thereof.

Mr. Mahoney: The Bucyrus Company original invoice No. 70561, dated October 11, 1919, to the Chile Exploration Company, New York, New York, is hereby offered in evidence as Defendants' Exhibit 122, and the notary is requested to so mark the same.

Mr. Edgerton: The exhibit is objected to as immaterial, incompetent and irrelevant.

(Narrative continued.) I have original accounts receivable ledger sheet of the Bucyrus Company which shows payment of the account of invoice M-70561 by the Chile Exploration Company. This invoice was entered

as a debit and the payment of the invoice is recorded as a credit. This ledger sheet bears index number 63 sheet No. 7, and this invoice has been entered as of October 11, 1919, in the amount of $1400.00 and the payment therefor has been entered as of November 24, 1919, in the same amount. These entries were made in the regular course of business contemporaneously to the transactions to which they refer. I would not be willing to surrender this ledger sheet as an exhibit for this deposition. I have compared the photostatic copy of ledger sheet index No. 63, sheet 7 and find that it is a true and correct copy of the original.

Mr. Mahoney: A photostatic copy of both sides of Bucyrus Company ledger sheet, index number 63, sheet 7, which the witness has stated is a true and correct copy of the original from which he has been testifying, is hereby offered in evidence as Defendants' Exhibit 123, and the notary is requested to so mark the same.

Mr. Edgerton: The exhibit is objected to as incompetent, immaterial and irrelevant.

Cross Examination by Mr. Edgerton.

Referring to Defendant's Exhibit No. 120 I did not have anything to do directly with the preparation of this invoice. I do not recall whose initials those are shown in pencil in the left column near the bottom of the page. Referring to Defendant's Exhibit 121 I did not have anything to do directly with the preparation of this ledger page. Referring to Defendant's Exhibit 122 I did not have anything to do directly with the preparation of this invoice. The same is true as to Defendant's Exhibit 123. In 1918 and 1919 I was employed by the Bucyrus Company under the immediate supervision of the assistant controller, doing work of a miscellaneous accounting character in the accounting department. I did not have charge of the records Exhibits 120 to 123, inclusive, at that time, although I was and am familiar with them. The entry reading "orginal order 18641" on Defendant's Exhibit 118 means the original shop order number on which a dipper of the design shown on the drawing was manufactured by the Bucyrus Company. That number would not appear on the ledger sheets or invoices, Exhibits 120 to 123, inclusive. That number however would be carried through the shop and accounting records of

the Bucyrus Company. I do not have any knowledge or record independent of the ledger sheets Exhibits 121 and 123, which show the payment of the respective accounts to which I have referred by the Chile Exploration Company.

Deposition closed.

(Deposition session was adjourned at this time to 9:30 a. m., May 1, 1931.)

(Friday, May 1, 1931, 9:30 a. m., deposition session resumed.)

C. A. KELLY, a witness called by defendants, being first duly sworn, testified as follows:

DIRECT EXAMINATION by Mr. Mahoney.

My name is C. A. Kelly. I reside at Milwaukee, Wis. I am fifty-one years of age. I am purchasing agent for the Bucyrus-Erie Company, and have been employed by this company or its predecessors for about twenty years. During the years 1917 or 1918 I was foreman of the drawing room. I am the C. A. Kelly whose name is signed on drawing No. 35576, Defendant's Exhibit 118. The date of my signature on that drawing is February 7, 1918. Before any drawing was issued to the shop it must bear the foreman's signature. I was not required to check the drawing. I merely had to approve the drawing by signing my name thereon. That is virtually what it amounted to. The designation on the drawing "1-2145" indicates the following. The "1" is a symbol designating a shovel. The "2145" is the serial number of the machine. This drawing is what is known as the general arrangement drawing and was made after the individual details were issued to the shop. I have a tracing to show instructions issued to the shop as the details of the dipper shown in this drawing. This is tracing G1-2145-A, known as the general list. This list specifies a 6-B dipper indicating that it is to be manufactured to a detailed list 71838 group 1, one set. With the teeth, both back braces, and the bail straps as shown on lines 1, 2 and 3. This tracing indicates drawing 35576 as the principal or general drawing. The serial number of the machine 1-2145, size 225-B appears on this tracing. The date of this tracing to which I have been referring is August 24, 1917. The detailed list called for this tracing G1-2145-A is tracing number 71838, which I hereby produce. This detailed

list covers the instructions to the shop to manufacture the detail parts going into the construction of a 6 yard dipper, symbol 6-B. This tracing bears two dates, having been checked on February 5, 1918, and approved by me as foreman on February 6, 1918. Both the blue print 35576 and the detailed list 71838 indicate it was for a 225-B machine, serial number 1-2145. After these tracings G1-2145 and L-71838 are received in the shop, the production department will issue instructions for the ordering of castings, forgings or other items produced in our shop. If the storekeeper does not have the store items he will see that they are so ordered. After the parts have been made up in accordance with the engineering department's drawing this department does not have anything further to do with them. All parts are presumably then inspected by the inspection department. As a matter of fact, I know it is the practice that all parts are inspected before they leave the shop.

After such an inspection the inspection department issues to the engineering department what is known as an inspection sheet indicating the serial number of purchased equipment, also indicating the manufacturer's name of certain purchased items together with pattern numbers if any. I have a copy of such an inspection sheet showing that the dipper in drawing 35576, Defendant's Exhibit 118, for shovel No. 2145 had been inspected by the shop. The number of this inspection sheet is No. 1-B-2145 and it is dated July 23, 1918. This inspection sheet indicates that we shipped with this machine a 6 yard dipper, 6-B. It also indicates the pattern number and the manufacturer's points and bases required for dipper teeth. These tracings G1-2145-A, and L-71838 and this inspection sheet 1-B-2145 dated July 23, 1918, are original records with our company and I would prefer not to have them go out of our possession. If necessary I can have made certified copies of these three prints. The initials "C.A.K." on the bottom of the sheet 1-B-2145 are my initials. The date 10-28-18 on this inspection sheet is the date on which it was compared with the general list to determine whether or not it agreed therewith insofar as this could be determined by the engineering department. In other words, after this list comes back from the shop, the engineering department checks it with the list of drawings. This checking must take place after the shipment has been made. I cannot state what the date "7-23-18" indicates on the top of the list. The rubber stamp appearing on this sheet 1-B-2145 indicates the

date on which this specific blue print was made. I have compared the blue prints of tracings L-71838 and G-1-2145-A and the photostatic copy of inspection sheet 1-B-2145 with the original tracings and inspection sheet and find them to be true and exact copies thereof.

Mr. Mahoney: Blue print G1-2145-A, dated August 24, 1917, blue print L-71838, dated February 5 and 6, 1918, and the photostatic copy of blue print 1-B-2145, dated July 23, 1918, are hereby offered in evidence, as a group, as Defendants' Exhibit 124, and the notary is requested to so mark the same.

Mr. Edgerton: The exhibit, blue print 1-B-2145 is objected to as secondary evidence; the entire exhibit is objected to as incompetent, immaterial, irrelevant and as insufficiently proven.

Mr. Mahoney: Direct examination closed.

CROSS EXAMINATION by Mr. Edgerton.

Q. In your answer to Q. 37, you stated the checking must take place after the shipment is made. You mean it is the practice of your company to permit goods to be shipped before you even undertake to check the material list with the inspection report? A. The answer to Q. 37 referred to the checking of the inspection sheet issued by the chief inspector with the original general list, and does not refer to the checking of the material.

Q. Then the material went forward, so far as the engineering department was concerned, without knowing whether the inspector's report would tally with the material specifications, is that right? A. It is not the function of the engineering department to supervise or assume responsibility for the inspection of material.

Q. You have not answered my question. A. Yes.

Mr. Edgerton: Cross examination closed.

RE-DIRECT EXAMINATION by Mr. Mahoney.

Q. The matter of inspecting materials called for by the drawings issued by the engineering department and in seeing that the materials called for by the drawings are shipped according to specifications, is a matter for the shop force, is that correct? A. It is.

Q. And the sheet 1-B-2145 indicates that the shop had checked such material in accordance with the drawings issued by the engineering department? A. It does.

Mr. Mahoney: Re-direct examination closed.

Deposition closed.

ANDREW VAHLDIECK, a witness called by defendants, being first duly sworn, testified as follows:

DIRECT EXAMINATION by Mr. Mahoney.

My name is Andrew Vahldieck. I reside at Milwaukee, Wisconsin. I am forty-seven years of age. I am general foreman of the machine shops of the Bucyrus-Erie Company. I have been employed by the Bucyrus-Erie Company twenty-four years or a little over that. I am testifying under subpoenas. In the years 1917 and 1918 I was foreman of the engine shop until the first part of 1918 when I was made chief inspector. I was foreman over the inspectors. This department inspected all of the work that went through the shop. The work is inspected as each piece is made, and then a final inspection after it is assembled. All errors or discrepancies were taken up with the engineering department before the shipment was sent out. That is my signature indicated by the writing at the bottom of blue print 1-B-2145 dated July 23, 1918. This paper is a copy of the inspection sheet. This inspection sheet is for a repair sales record of the parts that went into this particular job and indicates the parts that were actually shipped on order 10892 for machine serial number 2145. The date 7-23-18 indicates the date the inspection was made out, and the material would have been shipped previous to that date. At the time this inspection sheet was made out I was chief inspector and as chief inspector I was responsible for seeing that the material called for by the engineering department drawings and lists conformed to the specifications called for by the engineering department list. The reference 6-B with the pencil ring around it on inspection sheet 1-B-2145 indicates the symbol number of the dipper. This symbol number 6-B appears on tracing G1-2145-A. The principal number for this dipper 6-B appearing on this inspection sheet is 35576. The serial number of the machine shown on inspection sheet 1-B-2145 is serial number 2145. Shop No. 225-B. The number S-291 is the shop inspection number.

No cross examination.

Deposition closed.

NOEL S. HAYWARD, a witness called by defendants, being first duly sworn, testified as follows:

DIRECT EXAMINATION by Mr. Mahoney.

My name is Noel S. Hayward. I reside at 1250 Fairview Avenue, South Milwaukee, Wisconsin. I am fifty years of age. I am chief interpreter, repair sales division, in charge of all records of the Bucyrus-Erie Company. By the term chief interpreter is meant that when a repair order comes and there is any question about the proper interpretation, I am supposed to decide on the correct interpretation. This term does not refer to translation of foreign languages. I have been employed by the Bucyrus-Erie Company or its predecessors since October, 1916. The Bucyrus-Erie Company has received repair orders for a machine sold to the Chile Exploration Company serial number 2145, 225-B shovel since July 23, 1918. I hereby produce the original repair order for the Chile Exploration Company 225-B, machine 2145. The date of this order is September 13, 1919. The number of this order is 8053-96139. This repair order was issued for one dipper front. The repair order shows that the part it covered was pattern number 35575-A on drawing 35575. The numbers on this repair order appear on drawing 35576, Defendant's Exhibit 118. This is an original record taken from the files of the Bucyrus-Erie Company over which I have supervision.

The stamp at the bottom on the left hand side indicates that the casting on this order was ordered from the foundry on September 13, 1919; and the stamp on the right hand corner indicates that the casting was routed through the shop on the date stamped thereon. The date of shipment given on this order is the date of contemplated shipment of the part. This repair order No. 96139 is one of the permanent records of the company and I would not be willing to surrender it as an exhibit. The photostatic copy of this repair order 8053-96139 is a true and exact copy of the original.

Mr. Mahoney: The photostatic copy of repair order 8053-96139 of the Bucyrus-Erie Company, dated September 13, 1919, for dipper front for 225-B shovel, Serial No. 2145, for the Chile Exploration Company, is hereby offered in evidence as Defendants' Exhibit 125, and the notary is requested to so mark the same.

Mr. Edgerton: Objected to as incompetent, immaterial and irrelevant.

Q. Is the dipper front subjected to considerable wear?

Mr. Edgerton: This witness has not been qualified to answer such a question. The question is therefore objected to as incompetent, and as leading.

A. Yes.

Q. You have had considerable experience with repair orders, have you not, with the Bucyrus-Erie Company? A. Yes.

Q. What are dipper fronts sometimes referred to? A. As wearing parts.

Q. I presume they have to be renewed at certain intervals depending upon the amount of use they are subjected to?

Mr. Edgerton: Objected to as leading.

A. Our records indicate that this is so.

Mr. Mahoney: Direct Examination closed.

CROSS EXAMINATION by Mr. Edgerton.

Q. Do your duties with the Bucyrus-Erie Company or its predecessor familiarize you with transportation problems such as the length of time an article as described in Exhibit 125 would be received in Antofagasta, Chile? A. No.

Q. Referring to the Exhibit 125, and particularly to the line marked "Shipped to Chile Exploration Company," does this mean that the product was to be shipped to the address indicated herein and that it was sold to the Chile Exploration Company, at Antofagasta? A. The instructions received with this order denote that it is to be shipped to the Chile Exploration Company at Antofagasta, Chile, and it is to be presumed that it was so shipped.

Q. Do you know of your own knowledge whether it was in fact ordered by the Chile Exploration Company of Chile and shipped to them at Antofagasta, Chile? A. No.

Q. What, if anything, did you have to do with the preparation of this original document, of which Exhibit 125 is a copy? A. Nothing.

Q. When did you first see this paper? A. As near as I can prove, the first time I saw this document was in September, 1922.

Mr. Edgerton: Cross examination closed.

RE-DIRECT EXAMINATION by Mr. Mahoney.

Q. This record was found by you in the files over which you have supervision as early as September 28, 1922, is that correct?

Mr. Edgerton: Objected to as leading.

A. Yes.

Q. And had been in the files previous to the time you first referred to, is that correct?

Mr. Edgerton: The same objection.

A. Yes.

Mr. Mahoney: Re-direct examination closed.

Deposition closed.

(At this point a recess was taken in the deposition session until 1:00 P. M. of the same day, Friday, May 1, 1931.)

(1:00 P. M., Friday, May 1, 1931, deposition session resumed.)

D. P. EELLS, a witness called by defendants, being first duly sworn, testified as follows:

DIRECT EXAMINATION by Mr. Mahoney.

My name is D. P. Eells. I reside at 1653 North Prospect Avenue, Milwaukee, Wisconsin. I am forty-six years of age. I am vice president of the Bucyrus-Erie Company in charge of the foreign department. I have been employed by this company or its predecessors since 1907. I am testifying under subpoenas in these cases. During the years 1917 and 1918, I was treasurer of the company and also manager of the foreign department. I have a very distinct recollection that while I was manager of the foreign department our company sold stripping shovels to the Chile Exploration Company, because I participated in the negotiations personally. This was a 225-B electric shovel, equipped with a front opening dipper. I hereby produce the original order our company received for the 225-B electric shovel from the Chile Exploration Company. This order number is dated June 21, 1917, and numbered 10583, requisition CX10329. This order was received from the Chile Exploration Company at 120 Broadway, New York. The order is signed Chile Exploration Company G. G. Thomson, purchasing agent and is addressed from New York City, 120 Broadway. That is where the general offices of this

Company was located at this time. Today their offices are on lower Broadway, I don't remember the exact number; I think in the Cunard Building in the offices adjacent to the Anaconda Copper Company, of which the Chile Exploration Company now is a subsidiary corporation.

The specifications attached to and forming a part of the order read as follows as to the dipper:

"The dipper is of extra heavy design suitable for digging hard material. All parts are designed to withstand not only the sudden shocks to which they are subjected but also the continual wear. All pins are of ample size and the pin holes are fitted with renewable hardened steel bushings.

"The dipper is of our special front opening type, capable of loading cars at the pit elevation. The front will be a nickel chrome steel casting hinged to the sides close to the top. The back will be an annealed steel casting with lugs for the attachment of the handle end castings and the back braces."

Q. Referring to this file, I call your attention to the letter from the Chile Exploration Company of September 22, 1917, to the Bucyrus Company, and ask you to state what this letter refers to, particularly the third paragraph of the letter. A. The letter refers to the order, and particularly in the third paragraph to the front opening dipper, and requested that we send them a drawing of this front opening dipper when completed.

Q. Do you know whether this order was accepted by your company? A. Yes. It was.

Q. I now hand you a blue print which has been introduced in evidence here as Defendants' Exhibit 118, and ask you to state what this blue print shows?

Mr. Edgerton: Objected to as leading.

A. This shows the front opening dipper as supplied to the Chile Exploration Company for the 225-B shovel ordered June 21, 1917.

Mr. Edgerton: Objection.

Q. Do you know whether or not the Bucyrus Company made up a dipper like that shown in drawing 35576, Defendants' Exhibit 118? A. Yes.

Q. Did you actually see the dipper after it was manufactured by your company before shipment? A. I did.

Q. Where did you see this dipper? A. In the shop at South Milwaukee, on the erecting floor.

Q. I now hand you photographs 3049-A, B, C and D, Defendants' Exhibit 119, and ask you to state what they illustrate, if you know?

Mr. Edgerton: Objected to as leading.

A. These show the dipper as furnished the Chile Exploration Company in accordance with drawing 35576.

Q. Do you know whether this dipper was actually shipped to the Chile Exploration Company in accordance with order No. 10583 in connection with this 225-B shovel? A. Yes, I know that it was shipped to the Chile Exploration as part of their order for the 225-B electric shovel.

Q. Have you got any papers to indicate that the shovel was accepted by the Chile Exploration Company after it was shipped to them? A. Yes. Their letter of April 9, 1919, indicates that our erector has completed his work at the property and was released. His work consisted in erecting, testing and demonstrating, breaking in operators, and so forth, for the Chile Exploration Company in connection with the 225-B electric shovel and other shovels which we likewise supplied this company.

Q. Does the letter give the name of your erector? A. Yes. The name of the erector is O. W. Momsen.

Q. Do you know if Mr. Momsen is still in your employ, and, if so, where is he located? A. Mr. Momsen is still in our employ, and has been working for us for a number of months erecting and testing some machines which were sold to the Foundation Company in Greece.

(Narrative continued.) At the present time Mr. Momsen is on leave in Paris, France, but will return to Greece again in a few weeks time, as the Foundation Company wish to have him act as their superintendent. The paper Defendant's Exhibit 120 is a copy of the invoice rendered to the Chile Exploration Company for the 225-B electric shovel called for on their order number 10583, their requisition number CX10329. The total amount of this invoice is $78,550.00. The date of the invoice is July 23, 1918, and indicates the date of the shipment of the shovel from our works. The Chile Exploration Company paid this invoice in accordance with the terms of payment. We would be opposed to surrender the original order number 10583 and the letter of the Chile Exploration Company to the Bucyrus Com-

pany dated April 9, 1919 and the letter of the Chile Exploration Company dated September 22, 1917, and page 6 of the specification number 1977 forming part of this order. I have compared the photostatic copies handed me of the various papers above referred to with the originals and find they are true and correct copies of the original.

Mr. Mahoney: The photostatic copies just compared by the witness with the originals are hereby offered in evidence as a group, as Defendants' Exhibit 126, and the notary is requested to so mark the same, Chile Exploration Company order No. 10583, requisition No. CX10329, dated June 21, 1917, for one 225-B electric shovel, letter of September 22, 1917, from Chile Exploration Company to Bucyrus Company, letter of April 9, 1919, from the Chile Exploration, Chiquicamata, Chile, to the Bucyrus Company, and page 6 of specification No. 1977, referred to as forming a part of this order.

Mr. Edgerton: The exhibit 126, and each of the papers thereof, are objected to as secondary evidence, and particularly is this objection urged because the offer does not include certain papers and letters in the file from which the witness has testified; moreover, it is apparent that the original file contains papers which have been defaced and these defaced papers have been urged in the witness' testimony; further, the file contains letters which have been signed by persons not called to testify.

I would like to accommodate counsel and the Bucyrus Company, but under the circumstances insist that the original papers be offered in evidence.

Mr. Mahoney: Counsel for plaintiff is requested to indicate which of the papers referred to in the witness' testimony that have been defaced.

Mr. Edgerton: Page 6 of specification No. 1977.

Q. Please refer to page 6 of the specification which counsel for plaintiff says has been defaced, and explain such alleged defacture. A. At the time this order was taken we had a dipper of another type which was furnished for machines of this size to other customers, and specifications were printed to include the other type of dipper. It was our practice then, and is still our practice, to attach a rider calling for a dipper or other part of different design to the specification. This was the

practice rather than going to the trouble of printing or typewriting an entirely new specification.

Q. This rider, then, to which counsel for plaintiff has objected on page six specification No. 1977 formed a part of the original specification submitted to the Chile Exploration Company, and when the order was entered, is that correct?

Mr. Edgerton: Objected to as leading. Let the witness testify.

A. Yes. This statement is correct.

Q. Were the original letters from which photostatic copies were made for this Exhibit No. 126 dated April 9, 1919, and September 22, 1917, original letters received by your company in regular course through the mail? A. Yes. The letter dated April 9, 1919, was received by us direct from the Chile Exploration Company's plant at Chuquicamata, Chile, and the other letter, dated September 22, 1917, was received by our New York office and forwarded to us from there.

Mr. Mahoney: A recess will be taken at this time in order to show a moving picture of the Bucyrus shovel No. 225-B with the front dumping dipper thereon in operation at the Chile Exploration Company's mine in Chile, South America.

After recess.

Q. Mr. Eells, we have just witnessed a showing of the moving picture. Will you kindly explain what the moving picture shows, that we saw? A. The moving picture shows a portion of the mine of the Chile Exploration Company at Chuquicamata, Chile, in which various Bucyrus shovels are in operation, and of particular interest is the portion of the film which shows the 225-B electric shovel equipped with the front opening dipper, loading copper ore into cars.

Q. The 225-B shovel with the front opening dipper thereon was shown in actual operation in the film, is that correct?

Mr. Edgerton: Objected to as leading.

A. Yes; that statement is correct.

Q. Will you describe how the front opening dipper operated in the moving picture which you have just witnessed? A. Instead of the material being released from the dipper by the opening of the door, such as occurs on dippers generally furnished for use on steam shovels and

electric shovels built in those days, this front opening dipper as shown in the moving picture film operated in a somewhat different manner; that is to say, the dipper is built in two parts and the dipper front is pin-connected at the top and so arranged that this is a hinge connection which can be opened at will and allow the material to fall out into the car.

Mr. Edgerton: The foregoing answer is objected to; the witness in his description had before him Exhibit 119 which he studied and based his answer thereupon.

Q. Did the moving picture which you have just witnessed show the front opening dipper operating in the manner which you have described in your previous answer? A. Yes, it did.

Q. Please state how this film from which this picture that was just shown came into your company's possession? A. It was purchased by the Bucyrus Company from the party who took the film of the entire mine in operation of the Chile Exploration Company. The correspondence with these people was carried on by the foreign department of the company, and at first it was the desire to sell to us the entire film but we indicated that on account of the expense of purchasing the entire film we desired only that portion which showed the shovels, which we had furnished, in operation. Consequently, after some correspondence back and forth the owners of the film agreed to give us only the portion which we desired, and a portion of the film was purchased rather than the entire film.

Q. Did you handle the matter of the purchase of this film for your company personally? A. It was handled by our department under my supervision, and the decision rested in my hands.

Q. Do you recall when this film was purchased? A. A comparatively short time after the 225-B electric shovel, equipped with the front opening dipper, was put in operation.

Q. Has this film been in the company's possession all of these years, do you know?

Mr. Edgerton: Objected to as vague and ambiguous.

A. Yes, it has.

Q. Did you see the film exhibited shortly after it was purchased by your company? A. I did, immediately after it was received by us.

Q. Is the film which you have witnessed today the same identical film that you saw exhibited shortly after it was purchased by your company? A. Yes, it is.

Q. In the showing of this film, how were you able to identify the shovel shown therein as being the Bucyrus Company shovel with the front dumping dipper thereon which you have stated was sold to the Chile Exploration Company on order No. 10583 now in evidence? A. There is no question but what the shovel is a Bucyrus shovel, because the letters "Bucyrus" can plainly be seen on the side of the boom. Since we only furnished one 225-B electric shovel dipper for the Chile Exploration Company, it follows that the shovel shown in the film is the shovel covered by their order of June 21, 1917.

Mr. Edgerton: Objected to as conclusions.

Q. Was the showing of the film of such a nature that you could positively identify the design of your company's shovel and particularly the front opening dipper? A. Yes.

Q. Have you got the correspondence which shows the negotiations you carried on in connection with the purchase of this film? A. No. That correspondence has been destroyed.

Q. Do you know when the correspondence was destroyed? A. Comparatively recently, when we cleaned out some old foreign department files.

Q. Do you know if this correspondence was destroyed before any question came up about the use of this film as an exhibit in this case? A. Yes. The exact date can be furnished by the members of our department who supervised the destruction of these files.

Q. Do you know if a search was made to locate any records in connection with the purchase of this film within the last few days or the last week or so? A. Yes, a short time ago a careful search of the files was made with a view of producing this correspondence, but it could not be found as all correspondence of this nature that occurred in those years was destroyed.

Mr. Mahoney: The film which was exhibited during the recess period showing the 225-B Bucyrus electric shovel with the front dumping dipper thereon in operation in the mine of the Chile Exploration Company at Chuquicamata, Chile, South America, is hereby offered in evidence as Defendants' Exhibit 127, and the notary is requested to mark the same.

Mr. Edgerton: The exhibit is objected to as immaterial, incompetent and irrelevant, and as insufficiently proven.

Mr. Mahoney: Direct examination closed.

CROSS EXAMINATION by Mr. Edgerton.

I was not present when that picture, Defendant's Exhibit 127 was taken.

Q. Is the Bucyrus-Erie Company interested in the outcome of the litigation between the Keystone Driller Company and the two defendants herein?

Mr. Mahoney: Objected to on the ground that this witness is not connected with the legal department of the Bucyrus-Erie Company nor versed in patent matters, and therefore this question is obviously improper and is attempting to obtain information about which the witness is not competent to testify.

Mr. Edgerton: This witness has been shown in direct examination to be an officer of the company, and it will also be noted that Mr. Arnaud of the patent department of the Bucyrus-Erie Company has been present throughout the taking of these depositions.

Mr. Mahoney: Mr. Arnaud has been present at these sessions merely as a spectator.

A. The Bucyrus-Erie Company is naturally interested in any litigation that is taking place in the industry between companies that are engaged in the manufacture of excavating machinery.

Mr. Edgerton: Cross-examination closed.

Deposition closed.

CARLYLE BRINKMAN, a witness, called by defendants, being first duly sworn, testified as follows:

DIRECT EXAMINATION by Mr. Mahoney.

Mr. Mahoney: It is hereby stipulated that notice as to this witness is hereby waived.

My name is Carlyle Brinkman. I reside at Milwaukee, Wisconsin. I am 45 years of age. I am sales engineer of the Bucyrus-Erie Company. I have been connected with them for about eight years. I have been at the mines of the Chile Exploration Company at Chuquicamata, Chile. The last time I was there was in January, 1931. My duties with the Bucyrus-Erie Company re-

lates to the promotion of sales in Chile, mostly connected with iron and copper mines and nitrate mines. The various types of shovels of the Bucyrus-Erie Company that are used by the Chile Exploration Company in their Chile mines are 120-B heavy duty electric shovel, 320-B electric shovel, 225-B electric shovel, 30-B Diesel shovel, 103-C and 95 ton railroad type. I have seen two 225-B electric shovels on this mining property. The 225-B electric shovels were not working during the last part of 1930, but one of them, which I saw in 1928 or the first part of 1929 had what we call a front opening dipper. The other 225-B was, as I recall it, equipped with a standard type Messabi dipper. I have seen the 225-B electric shovel with the front opening dipper operating at the mines of the Chile Exploration Company at Chuquicamata, Chile. I saw this shovel in operation many times. I remember seeing it in operation in 1921, 1929, and 1930. While I have only been with the company for eight years I have seen this shovel in operation many other times before I went with the Bucyrus company.

Mr. Mahoney: A recess was taken and the moving picture, Defendants' Exhibit 127, was exhibited to the witness and counsel.

Q. You have just witnessed the motion picture. Can you state whether or not it shows the properties of the Chile Exploration Company at Chuquicamata, Chile? A. I can state that it does, positively.

Q. Will you state what the picture showed and the type of equipment you saw in operation in this picture, in a brief way? A. The picture showed several railroad type shovels, and one of the 225-B.

Q. What type of dipper was the 225-B equipped with? A. The 225-B was equipped with a front opening type of dipper.

Q. Could you definitely identify this as the Bucyrus Company 225-B electric shovel with front opening dipper which you saw in operation at the various times you were on this property of the Chile Exploration Company at Chuquicamata, Chile? A. I can identify it positively because there is no other shovel of that size built of similar construction.

Mr. Edgerton: Objected to as an opinion.

Q. Would you say positively that this was the shovel which you saw in operation to the best of your knowledge and belief? A. I can say positively that the

picture was taken at Chuquicamata, Chile, and that the shovel in the picture is a 225-B Bucyrus with front opening dipper.

Q. And you saw such a shovel in operation at the various times you visited these properties, is that correct? A. At least on the majority of times that I visited the property I saw the shovel in operation.

CROSS EXAMINATION by Mr. Edgerton.

Q. Were you present when the picture which you witnessed this afternoon was made at Chuquicamata, Chile? A. I was not.

Cross-Examination closed.

Deposition closed.

J. H. IMSE, a witness, called by defendants, being first duly sworn, testified as follows:

DIRECT EXAMINATION by Mr. Mahoney.

My name is J. H. Imse. I reside at 1839 N. 54th St., Milwaukee, Wisconsin. I am 34 years of age. At present time I am correspondent in the foreign and export department, the Bucyrus-Erie Company. I have been employed by the Bucyrus-Erie Company about sixteen years. Defendants' Exhibit 125 is a repair order No. 96,139, dated September 13, 1919. This order covers one dipper front and was received from the Chile Exploration Company. The order was received for machine No. 2145 a 225-B shovel. I interpreted this order. By interpreting the order I mean that when an order is received the engineering records are referred to to determine the proper material to be supplied. Furthermore, the previous repair records are also consulted to be sure that the same material is being furnished. I wrote up this order myself. The order was written on the date appearing thereon.

No cross-examination.

Deposition closed.

H. O. JACOBSEN, a witness, called by defendants, being first duly sworn, testified as follows:

DIRECT EXAMINATION by Mr. Mahoney.

My name is H. O. Jacobsen. I am 43 years of age, and reside at 1245 Fairview Avenue, South Milwaukee, Wisconsin. I am engineer for the Bucyrus-Erie Company. I have been employed by the Bucyrus-Erie Company or its predecessors. I now hold the position of executive engineer. In 1915 and in 1918 I was draughtsman with the company and in 1918 I was doing checking of drawing work. Referring to Bucyrus Company drawing No. L-881 I remember I worked on this drawing under the supervision of Mr. Lehman. That was shortly after I came here, and Mr. Lehman furnished me with three hand sketches from which this drawing was made. I am certain a dipper was made in accordance with that drawing, because my recollection is that I had to make changes on the drawing during the test of the dipper. These changes were always brought in by Mr. Lehman. I have no recollection of being present at the test. I have however, a recollection of seeing a dipper on the 14-B shovel during the noon-hour.

The group of photographs just handed me, Defendants' Exhibit 117, undoubtedly show the dipper that I saw on the 14-B shovel. Referring to Defendants' Exhibit 118 I signed the tracing of this drawing on February 6, 1918, after having checked the same. By checking the drawing is meant all drawings first come from a lay out, then are detailed and in a majority of cases traced and finally checked and then approved by the engineers in charge before the work is done in the pattern shop or in production. The detailed drawings are handed over to a man in the engineering department, in conjunction with the lay out, who checks through the various functions for which a unit has been designed, and also checks to see that all dimensions on the detailed drawing and general drawing are correct. He also checks to see that the unit will function properly with other units on the machine. I know that a dipper was built like that shown in drawing 35,576, Defendants' Exhibit 118 for a 225-B revolving shovel, furnished the Chile Exploration Company. I have a recollection of seeing this dipper on the assembly floor before the same was shipped. Referring to the group of four photographs, Defendants' Exhibit 119, these photographs illustrate four different views

of the six yard front dumping dipper furnished the Chile Exploration Company. It may be seen that on one photograph, 3049-A, the pattern number is cast integral with the front. This pattern number 35,575-A is the pattern number of the dipper front used on the Chile Exploration Company order. The parts that have been marked with the letter "A" on photograph 3049-A are the corner dipper teeth. As to operation, this dipper was designed for a purpose of providing a means for emptying the dipper readily when dumping low. For this purpose it did not use the conventional bottom door of dipper design which would obstruct the material when dumping low, but used a hinged front by which means the front swung open when unlatched when dumping low providing a much better means of emptying the dipper in this position. As to closing when the dipper swings back into the pit the front naturally has a pendulum action and swings back, and when swung back it engages behind a latch which is provided for the purpose of holding the front latch. The term front applied to an outward stroke shovel on any dipper, including the front opening dipper, is that part of the dipper which provides a cutting edge when passing through the bank. In the case of drawing 35,576, Defendants' Exhibit 118, the front is denoted by a piece marked "2," placed in a circle with an arrow pointing from this piece marked to the drawing of the front.

I was present this afternoon when the moving picture, Defendants' Exhibit 127, was exhibited. I saw this picture before. It was exhibited after the Chile Exploration Company's shovel was in operation in the copper mines of Chile. It must have been approximately during the year 1919 that I saw the picture first exhibited. I distinctly remember that the foreman and engineers and some of the draughtsmen who had worked on the Chile Exploration Company's shovel were invited to see a reel of moving pictures of a shovel which were exhibited in the basement of the main office building of the Bucyrus-Erie plant at South Milwaukee. I distinctly remember the picture, as it was the first moving picture that I saw exhibited at the plant, and we were interested in the Chile Exploration Company since we had shipped quite a few shovels down there. This moving picture shows two machines, outside of the locomotive are the railroad type shovel and the large revolving shovel. It is not quite easy to distinguish whether the railroad type

shovel is of Bucyrus manufacture or not, but it is very easy to distinguish the full revolving type shovel since there were only two firms making this size of shovel. The Bucyrus shovel is easily distinguished by the fact that we use what are commonly called outside dipper sticks, that is, that the two dipper sticks straddle the boom. In the case of our competitor the dipper stick is a single member which passes through the center of the boom and is really straddled by the boom. The front opening dipper is easily seen on this moving picture and may be readily identified by comparing the same with the photographs taken on the erecting floor and also with the general drawing, Defendants' Exhibit 118.

Q. In other words, the moving picture shows the Bucyrus 225-B shovel with the front opening dipper which you stated you checked the drawings on and saw the dipper on the shop floor at South Milwaukee, is that correct? A. It does.

Cross Examination by Mr. Edgerton.

Q. Referring to Exhibit 118, did you print your name on the tracing from which this blue print was made? A. Yes, sir, I did.

Q. Now refer to Exhibit 116. Is your name in your own printing in that drawing? A. Yes, sir, it is.

Q. Did Mr. Walter Ferris supervise the making of either one of these drawings? A. I believe that Mr. Ferris was connected with the original structural front dumping dipper, but of that I am not sure since I worked directly with Mr. Lehman. Mr. Ferris was chief engineer at that time, but the ordinary draughtsman did not have much contact with the chief engineer and Mr. Lehman may have been and probably was in consultation with both Mr. Ferris and Mr. Bager on this dipper.

Q. You say may have been and probably was, but you are not sure of your personal knowledge, are you? A. No, I am not.

Deposition closed.

(Certificate of Notary omitted)

Mr. Mahoney: Now, Your Honor, we have made arrangements with a man to come here to show this picture to Your Honor here in the court room at two o'clock, if that arrangement is satisfactory. It will not take more than a few minutes.

The Court: Is that satisfactory to you, Mr. Richey?

Mr. Richey: If Your Honor wants to see it. It seems to me it is very objectionable, however. Manifestly, we haven't had any opportunity to cross examine any one about the machine that operated it when the picture was taken.

Mr. Corbett: Neither have we of yours.

Mr. Richey: Oh, yes; you saw the picture and you saw the man.

The Court: Well, I think we will have to take that picture here. Your objection goes to the weight of it. The court will bear that in mind when he sees the picture.

Mr. Mahoney: That is all of the depositions, Your Honor, and we are offering in evidence the depositions of all these witnesses whose evidence we have read from.

The Court: I want to get something clear in my mind. You have this Chile Exploration machine out of these depositions, and besides that an experimental machine that was put up in accordance with this patent here; is that right?

Mr. Mahoney: Yes. They had an inquiry for that type of dipper.

The Court: Let's see that patent. Was that a machine that was put up?

Mr. Corbett: The first machine built in accordance with that patent was a half yard shovel.

Mr. Mahoney: Two-thirds yard shovel.

The Court: Well, I am trying to get the patent and see where the patent was.

Mr. Mahoney: First of all they conceived the idea of that and filed that application patent, and then they made a wooden model of that thing first and tried it out, and it worked all right, and then they made an experimental steel model, as shown in the first group of photographs.

The Court: Which you will show this afternoon?

Mr. Mahoney: No, that is shown in the photographs here, and that was tested out in South Milwaukee, and was proved satisfactory, according to the testimony, and it was found that that type of shovel was satisfactory for use on big revolving shovels. Well, after they had proven that by this experimental steel model shown in these photographs, they had no further use for the experi-

mental steel, which was only a temporary arrangement, made out of steel for the purpose of testing. Later when they got an inquiry for that type of shovel, which is Defendant's 14-B experimental shovel, which had convinced them that that type of dipper was practical, then from that they just went ahead and manufactured the large 6 cubic yard dipper for the Chile Exploration Company, and shipped it to Chile.

The Court: It is all connected with this patent?

Mr. Mahoney: Yes.

Mr. Corbett: In the manufacture of the device that went to Chile, the scoop structure was different. But the patent structure shows the bucket or scoop opening higher up, but the device which was sold in this country and went to Chile shows the bucket or scoop opening practically at the bottom. That is one difference of some importance there. It was a different scoop, although it was the result of that whole development.

The Court: Well, this patent, then, is just an incident in that whole development. Is that the way you see it?

Mr. Corbett: Yes, Your Honor.

Mr. Richey: Does that close your case?

Mr. Mahoney: That is all the depositions—with the exception that we are going to show this moving picture this afternoon, and then introduce the same in evidence. The depositions of William M. Bager, Werner Lehman, N. A. McGrath, C. A. Kelly, Andrew Vahldieck, Noel S. Hayward, D. P. Eells, Carlyle Brinkman, J. H. Imse, H. O. Jacobsen, are hereby offered in evidence together with Defendants' Exhibits 115, 116, 117, 118, 119, 120, 121, 122, 123, 124, 125, and 126, which were offered in evidence during the taking of said depositions.

Mr. Richey: Now, you have enumerated all that you are going to put in?

Mr. Mahoney: Well, your witness is on the stand.

Mr. Richey: I was wondering whether you wanted to put an expert on in connection with this. Are you done now?

Mr. Mahoney: Not entirely, but we are done with that particular part of the taking of depositions if that is what you mean.

Mr. Richey: Well, we wanted to put Mr. Downie on after you concluded your case.

Mr. Corbett: Well, we have concluded our case.

Mr. Richey: All right, then.

Rex R. Downie, being re-called by the plaintiff testified as follows:

Direct Examination by Mr. Richey.

To refresh Your Honor's recollection, I would say that there was a question on the record at the time of the interruption. It related to what is known as the Thew device, which is in connection with the third Downie patent, which related to this connecting means between the stick and the scoop—what we called getting the hunky fool-proof device.

The Court: That is the third Downie?

Mr. Richey: Yes; it relates to the third Downie patent, and the particular exhibits under discussion were 56, 57, 59 and 60. Now, Your Honor, just to refresh your recollection this was the arc of the discussion in connection with that third Downie patent when we were interrupted. The question was: "Discussing the third Downie patent, I neglected to ask you to look at the Thew device shown in Defendant's Exhibits 56, 57, 59 and 60. Will you compare that in structure, mode of operation and results with the construction of the third Downie patent? You can also use this chart No. 43." That was the big drawing that the other side had.

The Court: Is that around here?

The Witness: Speaking mainly from Exhibit 59 as representing the type of joint between the stick and the scoop as illustrated in all of the exhibits referred to, there is a base plate at the foot of the stick fastened by means of a transverse pin at the forward edge of the scoop, and by other bolts extending in a direction parallel with the length of the stick, fastening the rear edge of that base plate with the top wall of the scoop, so that stresses in the scoop vertical or longitudinal of the stick would be transmitted to the stick, in part, by that forward pin which is in shear end in part by the shouldering action at the rear edge of the base plate. The pin which is in shear I am marking "A" on Exhibit 59, and upon the chart 43. The bolts in tension I am marking "B" upon chart 43 and Exhibit 59. The pin "A" in shear does not prevent play developing between the stick and the scoop of an essentially different type from that employed in the third Downie patent.

As to results in operation, since some initial clearance must be allowed for the insertion of the pin "A" and since the stress transmitted between stick and scoop in both directions would cause reversing shear stress and vibration upon the pin, the holes would necessarily become enlarged. It was to escape precisely such enlargement, due to operation and due to weather or rusting, for these scoops are in the open weather for periods of years, that the mounting of the third Downie patent was evolved, and which that mounting rectified in the commercial dipper. That completes my answer.

Q. Will you look at Defendant's Exhibits 43 to 49 showing the scoop said to have been used by the Brown Hoist Company, and compare that in structure, mode of operation and results with the disclosures of the fourth Downie patent. If you have had any personal experience with this type of tooth, you might state briefly what that is, and the results of it. A. These Exhibits represent two general types, or somewhat distinguishable types of side rake teeth or side teeth for the skimmer scoop, the one as shown in Exhibit 45-A, and the other in Exhibit 49-A. 45-A shows a trimmer or a side cutting blade vertically disposed, and with little or no blade for horizontal division of the material, whereas 49-A shows a distinct vertical blade, and corner attached therewith, to a horizontal blade. This tooth as shown in the depositions was made and offered in 1922, I think it was, by the Brown Hoist Company, and is patterned after a tooth which we developed in the skimmer in 1919, and of which I have certain photographs.

Q. Well, never mind the photographs—you can just say what it was and what your experience with it was? A. The tooth which we developed following was more like—I should have said preceding instead of following—the tooth 49-A, except that in our case we divided the vertical from the horizontal blades of the teeth. As stated, we used this as the side cutting tooth of the skimmer for a few months. The tooth was highly objectionable, and we abandoned use of it early in 1921. The objection was of two kinds: First, that the vertical shearing edge prevented a drawing out from being applied over road macadam or such work; in other words, it choked or blocked the entry of the scoop. That was the digging reason. There was also a reason in connection with the closing of the scoop in that the teeth protruded beyond the side plane of the scoop, the effort having been made to

get side clearance by this attachment of the tooth on the bottom, and interfered upon the side wall of the scoop so that we either had to cut back the side wall to a prohibitive degree—prohibitive, because it would be excessively weakening the side wall—or keep the teeth inside of the side wall. We chose the latter course, even though the skimmer does not require as much swing freedom for the dumping as do the scoops here in question.

(Noon adjournment)

Q. Mr. Downie, you said you had a photograph of that machine used with the tooth which you said you tried out and found to be a failure. Will you produce that photograph? A. I now produce a photograph of the skimmer, showing the side tooth to which I have referred made by us in 1919 and '20. This photograph is of the same machine and at the same site as the views shown on page 25 of Keystone catalog P-18, which is the machine of H. V. Kirker, contractor, of Beaver Falls.

Mr. Richey: I will offer that in evidence as Plaintiff's Exhibit P-69.

The Court: All right; it may be admitted.

Q. Now, were you present on March 11, 1931, when the defendant demonstrated its Osgood machine, that is, the defendant the Osgood Company demonstrated its Osgood machine before the court and the parties? A. I was.

Q. Will you describe briefly what was done with that machine at that time? A. The machine operated by Mr. Green March 11 was used to demonstrate discharge to inversion, the opening of the bottom for stop discharge, momentum closure of the bottom after stop discharge, the beginning and continuation of trench excavation, a very moderate gravity blow was struck on at least one occasion by the scoop, through a drop of about one foot, the stick was leaned toward the one side as for undercutting a trench for several degrees and sufficiently to efficiently undercut, the operation of rooting was demonstrated by passing the scoop over the ground first closed and then open, the boom and scoop were raised to the high elevation and the functioning of the stops was illustrated in the evident deflection of the bridle. I think that completes the principal functions of operation.

Q. Did you ask Mr. Corbett, of counsel for the defendant, the Osgood Company, if Mr. Elmire, our oper-

ator, could operate the machine there before the court? A. Yes, sir, I requested Mr. Corbett, and repeated it, upon denial, that Mr. Elmire be allowed to operate and more efficiently show the machine's capability of striking a gravity blow, rooting, the functioning of the stops, etc. Mr. Corbett refused the request, and repeated the refusal upon representation.

Q. Was a moving picture of that demonstration taken under your direction? A. Yes, sir.

Q. Have you that picture here? A. That picture is here.

Q. It also contains towards the end a short demonstration of the plaintiff's machine that was out there, doesn't it? A. That is correct; demonstration of the Keystone.

Q. Now, I will ask you to have that picture run and to point out these various operations as the picture proceeds.

Now, if Your Honor please, I understand the other side will put on their moving picture, and when they have put that on, we will put ours on, and the answer to this question.

The Court: All right.

Mr. Mahoney: Your Honor, we want to show our picture of the 225-B electric shovel that was shown as operated at the Chile Exploration Company mines, Chuquicamata, Chile, South America, at this point.

The Court: All right.

(Operator of machine being delayed in showing picture by difficulties in getting started.)

Mr. Corbett: You better put your picture on first.

Mr. Richey: All right.

(Moving picture of Osgood machine demonstration referred to in previous question shown on screen.)

Q. That is the Osgood machine, isn't it? A. That is the Osgood Company machine, a general view of the machine and the site, with the initial view of digging, and with the bottom closed.

The machine is stationary at this point in the film, that view just showing the right hand side of the machine.

The view has now changed showing a close-up of the machine, and touching the ground in the initial position of excavating.

At this point they were contacting so as to open the upper end of the channel and the rear face of the stick, which contact with the under edge of the bridle, functioning in lieu of the stops of the plaintiff's machine.

That view has changed, and the machine is excavating a trench in the normal manner, swinging to the right hand side and discharging by inversion.

Returning for an additional stroke; the bottom has been opened by pulling upon the latch line and is now being closed by momentum, by manipulation of the hauling and hoisting cables.

The rotated scoop is swung about to various points in the revolution of the machine and closed, and a measuring stick has been placed against the scoop, illustrating or showing the height; at this point the view changes, and a close-up is shown of the open scoop in contact with the ground as in the initial position for the rooting operation.

The scoop is drawn through the material, or has been in the stationary view here shown, with the side rake teeth only engaging.

The view changes, and the scoop is being drawn into the trench to illustrate the tilting of the stick for undercutting. Here the stick is shown sloping towards the lower right hand side a matter of a few degrees.

Again the view changes, and the links are seen to be disaligned from the direction of pull of the hoisting cable. Illustrating the function of the links used as a lever for causing outward kick in the scoop.

Then the film here, which is of the Keystone, also is shown here striking a gravity blow of from 8 to 12 foot drop. Mr. Elmire is operating the Keystone machine. This is a height which is excessive for commereial use and hard materials. This illustrates the potentiality of the machine for striking a severe blow. Commercially, from 3 to 4 foot drop is used more frequently.

Here is a view of the Keystone machine showing the operator's two hands engaging the two levers required for operation.

Q. The last view was the similar view of the Osgood machine, wasn't it? A. Yes, sir. The film, I believe, was broken. A part of the film has been broken off, which shows a corresponding view of the Osgood operator.

Mr. Richey: I offer the film in evidence as Plaintiff's Exhibit P-70.

(The defendants then proceeded with the film of machine operating in Chile previously referred to, with explanation of the views by Mr. Mahoney.)

Mr. Mahoney: The first picture shows the ordinary railroad type shovel being used at the Chile Exploration Mines, Chuquicamata, Chile.

This is still a regular railroad type of shovel.

Now here is the shovel in question. This is the 225-B electric Bucyrus shovel, loading into cars with the front dumping dipper on it.

There it is cutting into the bank.

The Court: What kind of material is that?

Mr. Mahoney: That is a very hard material; rocky material; copper ore.

There it is shown dumping into a car, and the dipper snapping closed after dumping.

Here is a closeup of the dipper itself, dumping into a car, shows the momentum closure and clamping shut after dumping.

This is a general view of the mines in which the regular shovels operate.

This film is offered in evidence as Defendant's Exhibit 127.

Mr. Richey: We object to it. It is incompetent and not properly proven, and is immaterial, as illustrating something that was done abroad and not in this country.

The Court: Well, I think I will overrule the objection and you may have your exception.

Mr. Richey: All right.

Mr. Mahoney: We also offer in evidence at this point as a group some pictures that were taken from the film, as Defendant's Exhibit 128.

Mr. Richey: Same objection, and I assume the same ruling.

The Court: What are those?

Mr. Mahoney: These are just enlargements taken from the film itself.

The Court: They may be admitted and you may have your exception.

Examination of witness Rex R. Downie resumed by Mr. Richey:

Q. Mr. Downie, how does the range over which the plaintiff's machine operates to avoid the blind spot com-

pare with that of the defendant's machine? A. I believe that the range in plaintiff's machine is a little greater than that in the defendant's.

Q. Is the range over which the defendant's machine operates a useful range? A. Yes, sir; it is a useful range.

Q. What was the condition of the corner of the stripe of the channels along the stick in the Osgood machine which engaged with the links? A. That corner, or the corners at the upper end of that channel, were chamfered in such a way as to indicate plainly that contact with the bridle was intended and provided for.

Q. In the construction of the ditcher stick of the defendant's machine the plates which connect the two channel parts extend along the stick, whereas, as shown in the first Downie patent, these parts extend only part way; what, if any, difference does that make in the operation of the sticks of the machine? A. No difference, except as a matter of degree, that the defendant's stick would be a little more rigid than plaintiff's.

Q. In the first Downie patent, the parts 5 and 3 composing the boom are separate, and in the defendant's machine they are integral. What, if any, difference would that make in the operation of the machine? A. That makes no difference in the function and operation of the machine.

Q. In the bearing connecting the stick and boom of the first Downie patent there are two separate pivots, and in the Osgood machine there is only one pivot. What difference would that make in the operation, if any? A. That makes no difference in the operation.

Q. In the defendant's machine and the plaintiff's machine demonstrated to the court the boom can be rotated through the 360 degrees, whereas in the machine of the first Downie patent the boom can be turned only 180 degrees. What, if any, difference does that make in the operation or advantages of the machines? A. That makes no difference to it as a ditcher. The full revolution of the machine has to do only with the range, the angular horizontal range wherein the operator may discharge the load. It is a matter of delivery, not a matter of digging.

Q. Just a matter of degree of delivering? A. Yes.

Q. In one or both of defendant's machines the bolt through which the scoop is connected to the stick is mounted with the front edges flush with the front end of the scoop, whereas in the plaintiff's machine the bolt

is back of the mouth of the scoop. What, if any, difference would that make in operation or advantages? A. It would make no difference whatever. The actual fastening of the stick to the scoop is on the center line of the bail, or by bolts removed a little from it. The fastening is, in fact, in the rear of the scoop in all three of the machines referred to, and the functioning is the same.

Q. Would the functioning or operation or advantage be changed any by closing the top of the scoop, as the Osgood Company does? A. None whatever.

Q. Would the matter of the height of the bail make any difference? A. No, sir.

Q. In the third Downie patent, the bolt 33 passes through a slot in the stick, and in the Osgood machine the corresponding bolt passes through a round hole in the stick. What, if any, difference would that make in the operation or function? A. None whatever. The bolt is used in both instances to clamp the flanges of the overhead bail against the fore and rear sides of the stick base, and this function is served equally well between a loose fitting or tight fitting bolt.

Q. Have you brought with you a drawing to illustrate the effect of a blow upon the machine, the Joplin machine, said to be illustrated in Defendant's Exhibit 26? If so, will you produce that drawing and explain it, referring to the reference numerals? A. Yes, sir. I have a drawing—

Mr. Richey: Let Mr. Corbett see it and Mr. Reed.

(Drawing exhibited to counsel.)

A. (Continuing.) This drawing illustrates the construction of Defendant's Exhibit 26, this being a prospective view, and requiring an assumption as to the width of the scoop, which is not shown in the print Exhibit 26, but is taken as a normal or ordinary dimension. The scoop is here shown, presented at an angle of approximately 45 degrees to the ground, and the weight of the stick and part of boom weight exerted against the rear wall of the scoop. This is the nearest position in which a gravity blow of any effect can be struck; that is to say, the range of gravity blow striking extends outwardly or to the right from the position here shown. This is meant to illustrate the fact that in the Joplin construction the weight of the stick is delivered against the end wall of the scoop and in the striking of the blow would have had the effect of dishing or blowing downwardly that end wall, and further, the effect of blowing outwardly the side

walls, thus distorting the scoop shell, and in time, of course, causing fracture of it. Such distortion would inevitably, in my judgment, eventually, if not immediately, depending on the severity of operation, cause a binding of the bottom pivots marked "D," which in this view are shown as clip angles, "h," pivoted to the side walls. The structure as a whole I should have said consists of the corresponding parts as those shown in Defendant's Exhibit 26. I believe I need not enumerate all of the elements, except that the side walls to which I refer as being bowed are marked "A" in this view, and the end wall is marked "b." The stick is marked "j." It will be noted that there is no bridging or supporting member spanning the width of the scoop except the bottom and the end wall. The braces in the way of spanning it all are loosely pivoted at the upper and lower ends, and hence have no bridging or bracing effect. Corresponding comments would apply as to the collapsing bowing of the side walls when the scoop is forced between converging hard surfaces in the excavating of a trench. The lack of bridging weakens the scoop both against spread and compression pressures.

The Court: That is the blueprint that the defendant put in showing the Joplin scoop, was it?

Mr. Richey: Yes, the Joplin machine.

Mr. Corbett: Only one of the Exhibits, Your Honor. Pardon me—are you speaking about Defendant's Exhibit 26?

The Court: That is the blueprint you put in.

Mr. Corbett: That was only an exhibit of the diagrammatic shown.

The Court: It was a blueprint that was shown the witness who testified about the Joplin machine. I am just trying to identify it.

Q. What effect would the bowing of the back as you have shown there have upon the latch? A. It would, I believe, render the latch inoperative. We have encountered such bowing occurring, in not as great degree as would occur in the scoop so mounted, but occurring by way of partly weight or inertia of the end wall itself, and so great as to destroy the latching mechanism. That is in our commercial machine, and in experiments we had wherein the stick is a spanning bridge overhead the scoop. So added stick weight and end wall inertia in the striking of the blow, I have no doubt that the destructiveness on the latch would be greatly increased.

Mr. Richey: I offer that in evidence as Plaintiff's Exhibit P-71.

Mr. Corbett: Well, we object to that.

The Court: Well, it is offered merely for illustrating this witness' testimony. It may be received.

Mr. Corbett: Highly speculative.

Q. Would the addition of the spring and rope and the two extra holes in the latch as shown in Defendant's Exhibit 73-3 remedy any of the faults of the machine shown in Exhibit 26, and give a brief reason for your answer? A. I would not remove those faults in the machine of Exhibit 26 to which I referred in my immediately preceding answer. That is, mainly bowing and distortion of the scoop shell, binding of the bottom pivots, and those other distortions which I referred to in the earlier portion of this trial, scissor-like distortion of the working of the scoop sides relatively to each other, due to eccentric loading and lack of bridging in the shell. The addition of the spring would in no wise present these body flexures, nor would the addition of the rope.

Q. Will you now refer to Morrison Patent No. 1,249,805, Defendant's Exhibit 115, and to the photographs said to illustrate the scoop shown in that patent, 116, 117, 118, and 119, and also to the scoop said to have been used in Chile, and illustrated in Exhibits 119-A, 119-B, 119-C and 119-D, and blueprint Exhibit 118, and any other exhibits and drawings and photographs and blueprints, and also in the moving picture said to have been made in Chile and offered in evidence as Defendant's Exhibit No. 127. Now, will you explain those to the court, and state whether or not in your opinion they would be available for inward arc machines, and give the reasons for your answer. A. There are two constructions principally referred to in your question: First, is that illustrated in the Morrison patent, and which is similar to that shown in Defendant's Exhibit 117? This is a forward arc scoop of which the bottom, or in that part called the front of the scoop, is pivotally attached to the body. It is the scoop of Morrison which was in the Cleveland suit, and which has been referred to as having excessive lead, and misconstruction of the latch and lack of side clearance capacity, as well as lack of swing freedom for the bottom, as would be required in the proposed adaptation of this scoop for momentum closed trench excavation. The Bucyrus scoop as we have been calling it—

Q. That is, the one used in Chile? A. The one used in Chile differs from the Morrison to summarize what I have to say about the scoops, principally in respect to the arrangement of the latch at the rear end of the scoop, and of course there are differences as to size and details of design, but I wish to refer to one significant change in construction. Whereas in the Morrison patent scoop a simple lever latch is used engaging a latch piece upon the bottom of the scoop at its one end and having at the other a compression spring bearing against the top wall of the scoop and holding outwardly the upper end of the latch, which arrangement is inadequate to prevent the bottom from coming open when the bottom is stressed, there is in this Chile or Bucyrus scoop a linkage, toggle link connecting the upper end of the latch with the end wall of the scoop, two holes being provided in one member, the end or lever member of the toggle, the one hole slightly off toggle or off alignment, and another hole directly upon toggle. That is to say, provision is made so that adjustment can be made by the operator to set up a toggle action between the upper end of the latch and the end wall, which would prevent any possible skidding outward of the lower end of the latch. This, I would believe, in the ordinary sense, from hearing the testimony here in regard to experiments with the Morrison, or a scoop similar to Morrison, by the Bucyrus Company, would follow as a result of what was found in that experiment, and remedies one of the points to which I have referred since my previous testimony has been referred to by Mr. Corbett as rendering the Morrison scoop not operative to do those things which the patentee intended. The necessity for this toggle about which I speak arises from the fact that the latch nib, the contact shoulder or ledge of it which engages the latch piece upon the bottom and supports the one end of the pivoted bottom, slopes downwardly and forwardly toward the tooth end of the scoop, and the corresponding part of the bottom slopes likewise, and it is obvious, and I know from experience with both skimmer and ditcher latches and scoops, that this slope will cause, or will permit, a coming open of the bottom when any weight is allowed to rest on such a latch. The action is simply that the latch skids from under, so to speak, the pressure developed by the bottom. Such pressure would be developed mainly or markedly in two instances, first, as when the teeth ride over the face of the excavation, and the weight of the stick or possibly power delivered through the stick, and the weight of the

scoop, are allowed to ride the teeth to force engagement. Such force of engagement sets up reaction in the ground that causes downward pressure at the rear end of the scoop, which may be very excessive. The second instance in which downward pressure would be exerted by the latch piece upon the latch would be if and when momentum closure is effected for the recoil or rebound force is very great, since the exact travel required for closure cannot at all or accurately be calculated by the operator, and so he always supplies plenty of motion. That is, he supplies enough and more to make it infallibly catch. Now, the rebound of the bottom causes a pressure which is the most likely pressure to snap latches off that I know of. Now, as I say, that defect of the Morrison scoop, which is what I had before me in testifying about it at Cleveland, has been met by the logical means of preventing accidental opening of the latch when we come to this Bucyrus scoop. Now, the comment, which is pertinent, I think, here, is that this toggle, if the links which have the bolts or pins marked 9 in the Bucyrus print 35,576, is so adjusted as to engage the other of the two bolts in the long lever, this toggle or knee joint, being, as it is said, locked, would positively prevent, unless the latch lever were pulled out by hand or by some means, the entry of the bottom. This is an obvious matter of mechanics, that unless the latch broke in two or flexed, or unless the lever toggle pointed to admit the bottom, the bottom would not enter. Now, it might be conceivable that a pull of the latch line would break the toggle at admission of the bottom enough to get the bottom closed; whether this could be done with the split-second rapidity necessary to catch a momentum clam bottom, I doubt as a mechanic. The other points about the Morrison and this scoop, and which are in the main in common, both as to their intended use, as I understand from the testimony, and as to the remarks as to their inapplicability to trenching, are as I have said, lack of side clearance, the lack of swing freedom of the bottom, and excessive load. I believe Mr. Ferris has said that he would alter the latches of these scoops, or of one or the other of them, for trenching, as I assume that no more time need be put upon that.

Now, as to bottom swinging freedom for momentum closure and for spot discharging of the load, I think the point is important, and I would not wish to retract the comment I made in that regard in the Cleveland suit. It

is necessary that a bottom for discharge of these materials in a ditcher shall have freedom of 180 degrees. We have tried making bottoms with less than that, and we know the effect; it is very destructive of bottom pivots, and it is very hard on side plates. We find that our present swing freedom, and we provide about 190 to 200 as in our present commercial ditchers, is not more than enough. The occasions where this swing freedom, that is, Your Honor, the capacity of the bottom to swing freely clear around until it is upside down, as it would be in this view here, is this, or are these: First, in dumping it is frequently desirable to shoot the load; that is to say, to swing the scoop to or nearly to the full outreach and then discharge the load practically at the furthermost lift of the scoop. So discharging a scoop, you will see that with the bottom inclined about 45 degrees, and horizontal to a point downwardly or leading to the bottom and all falling, carries the scoop 135 degrees open back by the load itself. Now, if you allow that bottom to fetch up against stops or resistance, it is very destructive. There is an opening requirement of 135 degrees, and the momentum of the bottom will carry it easily to 200, and should be allowed to carry it to 200. Now, in the actual closing of the scoop, it is frequently desirable to close a scoop at or nearly full outreach. This is impossible if the bottom will only open a matter of 90 or 100 degrees, which we understand the construction to be here. None of the figures show it opened that far; none of the views of the movie, as I followed it, showed the bottom open even 90 degrees. None of these scoops, in other words, give into this back the 90 degrees of swing freedom which I think is necessary.

Now, as to the side clearance, I do not want to take more time than necessary upon these things, but in view of the swing freedom which really is necessary, it is not possible to use these bottom teeth to cut side clearance, for these teeth would interfere upon the forward edges of the side wall of the scoop in somewhat the same manner as that earlier skimmer of that side tooth that Keystone used and which Brown Hoist used subsequently interfered in precisely the way that ours did, but I know that that was the reason for our abandonment of it. So a tooth would have to be supplied to either the Morrison or the Bucyrus scoop for practicable drainage excavation, and even for most cellar excavation; that is, in all cellar excavation except the soft material. The tooth would have to be fastened to the side walls, and the bot-

tom pivot would either have to be avoided or construction resorted to which would carry more collapsing strength in the tooth and down to a sufficient level to insure against the setting up of the shoulder th[illegible] Of course the question as to whether that tooth co[illegible] be supplied, and how much of a job it is, I can only refer to our own experience, that it was necessary in our case to reconcile the antagonisms that there were or which developed out of the fact that the bottom pivot had to be located at precisely the point at which the side rake teeth had to be secured. And that removability is highly important; the side pressing strength of the tooth is extremely important, as it is in any other tooth used anywhere in excavating, so far as I am aware—a double function tooth, digging downwardly, right along with its cuts at the bottom, and capable of resisting laterally pressures to which no bottom tooth is ever subjected, since the entire force of the machine is delivered to pull the scoop in between converging surfaces.

Q. Now, on that point, it has been alleged here that some of these outward arc machines closed their bottom by gravity. Isn't it a fact that the force and movement available in the outward arc and inward arc machines are different? A. Totally—not totally different, but markedly different.

Q. Will you explain briefly the differences between the two, and why the problem of closing the bottom by momentum of the inward arc machine is different from that of the outward arc machine? A. In the Keystone commercial machine there are just two lines for effecting the four primary movements of excavation, as we have said previously. In the forward arc machine, such as the 225-B Bucyrus shown there in the movie, and which I believe I have seen casually in the field, and, as stated by one of the witnesses, to be powered by electric power, the stick is reciprocated through the boom by the reversing, in that case, electric motor, and in earlier cases, steam engine. The point to that is this, that the reciprocating of the stick and the power application to the scoop through it is not a one-way power channel. It is the full equal of two cables, for, in the absence of the reversing electric motor, or the reversing steam engine, to perform it with the same positiveness as such prime movers, two cables are needed, one attached to the upper and one attached to the lower, and there are outward arc machines in the field driven by gasoline in which there is

no such thing as a reversing engine, having two cables, one attached to the upper end and one attached to the lower. Therefore, I have said in this and the previous case, and have considered and represented, and still believe, that the reciprocating stick which is capable, not only of delivering tension upon the scoop or pressure against it, moving it positively in two ways by artificial means is equal to two power members on it. Then there is in all of these outward arc scoops the hauling or bucket line. They sometimes call it the hoist line, but it is not to be confused with the hoist line as we have referred to it here in ditcher discussions. Now, therefore, I have said that the premises of closure and of scoop manipulation are definitely different in all of these outward arc machines from what they are in these commercial ditchers, the one is a three power member, and the other is a two power member. So that even if momentum closure were effected by the reciprocation of the stick, with or without coordinated manipulation of the dump line, it would not teach closure and did not teach it, and has not led to its adaptation in the industry.

Q. When did you first conceive the invention of the first Downie patent, No. 1,511,114? A. In the summer of 1920.

Q. And what, if anything, was done towards working upon that invention between that date and December, 1920? A. I was busy during that time getting the drawing into shape and constructing a trial unit and the scoop, getting it out to the field and testing it.

Q. Now, who was your patent lawyer at that time? A. Mr. E. J. Siggers.

Q. Of Washington, D. C.? A. Of Washington, D. C.

Q. Did you take up with Mr. Siggers the question of taking out a patent on this machine? A. Yes, sir.

Q. And when was that, first? A. That was in December, 1920.

Q. Do you remember the date? A. It was in the latter part of December, about the 20th or 21st.

Mr. Corbett: Your Honor, if I may interrupt here—my understanding is that the allegation of conception here is subsequent to the Joplin experiment; is that correct?

The Witness: That is not correct.

Mr. Richey: Well, wait a minute—subsequent to the Joplin experiment but not to his knowledge of it.

Mr. Mahoney: Well, that don't make any difference, about your knowledge.

Mr. Corbett: I just want to make that point clear. It has to be clear some time; it might as well be now. I understand Mr. Downie testifies that his conception of this drop bottom was in the summer of 1920.

The Witness: Yes, sir.

Mr. Corbett: And the Joplin experiment was in March, 1920.

The Witness: Yes.

Mr. Richey: I think that ought to be presented in argument, shouldn't it?

Mr. Corbett: I just wanted to fix it, is all.

Q. Do you remember whether or not the machine of this first Downie patent had been tested out before you submitted it to Mr. Siggers? A. Yes, sir, it had been tested.

Q. Can you produce a letter to Mr. Siggers on that question? A. I have a letter written by R. M. Downie, my father, General Manager of the company, and reporting—

Mr. Williams: Just a minute—this is a letter to whom?

Mr. Richey: Mr. Siggers, the patent lawyer.

The Witness: To Mr. E. J. Siggers.

Mr. Williams: I would like to see that before any testimony as to its contents.

The Court: You are offering this in the main patent case?

Mr. Richey: We are offering this, Your Honor, to show Mr. Downie had this information before he learned of the Joplin job. It is on the suppression of testimony.

The Court: It is, you say?

Mr. Richey: Yes.

The Court: Well, I suggest that you and Mr. Corbett both keep that separate, if you can.

Mr. Richey: I am starting on that now. You mean, put the expert testimony in, and then take him off and put him on again on the other?

The Court: Yes.

Mr. Richey: Well, that is satisfactory, then. We will recall him then for this testimony.

Mr. Corbett: Yes, that is all right with me.

The Court: Let Mr. Corbett start cross examining, unless you want something further.

Mr. Williams: Does the court insist upon the rule of cross examination by only one counsel of the witness?

The Court: We won't now if you separate this,—on the line of suppression of testimony. You can let Mr. Corbett examine him as to these patent matters, and get that out of the way.

Mr. May: If the Court please, it has been agreed by counsel for the defendants that photostatic copies attached to Mr. Martin's deposition of the four vouchers may be substituted, so that they may be taken back by Mr. McElhany.

The Court: You have the photostatic copies here, have you?

Mr. May: Yes, Your Honor: P-64, 65—and I don't know how they are numbered there.

Cross Examination by Mr. Corbett.

Q. I hand you Plaintiff's Exhibit P-18 and ask you to refer to page 33. A. Yes, sir, 33 or P-18.

Q. Upon a request of you to read from a certain catalog or catalogs of your company dealing with the digging of rock, you read from page 33 of that catalog, Plaintiff's Exhibit P-18—is it 18?

The Witness: P-18 is the number.

Q. The record as we have it indicates that your reading from that subject matter on page 33 was incorrect. As the record shows it, at the top of this page the first full paragraph is started by the following sentence: "The ditcher scoop can be operated in any material that can be dug mechanically. The presence of frosty ground will be no impediment. While we do not claim for the machine that it will dig hard rock, and so forth"—you left something out of that sentence, did you not? A. Yes, sir, there is an omission there.

Q. What is the omission after "impediment"? A. After following "impediment", if literally read—"when the ditch has once been started and the scoop can be drawn against the hard crust from below."

Q. So that, instead of that sentence saying that the presence of frosty ground will be no impediment, it said, did it not, that the presence of frosty ground will be no impediment when the ditch has once been started and the scoop can be drawn against the hard crust from below; is that correct? A. That is correct. Whether I read it that way before or not, I don't remember.

Q. At the demonstration of the Osgood machine at the Sam Davis coal yard, it is a fact, is it not, that every-

thing you requested our operator to do, either directly or through me, was done? A. There was one thing, Mr. Corbett: Mr. Green would not show us the way we wanted him to show us of striking the gravity blow.

Q. Any request you made through me was performed, is that not right? A. No, sir, I think I requested of you, plainly, at least twice as being the reason why I wanted Mr. Elmire to operate, in case Mr. Green could not do it, that the machine be used to strike a blow.

Mr. Corbett: I want to state on the record, Your Honor, anything requested by Mr. Downie that we do was done. I did not care to have a strange operator operate that machine, not knowing anything about his ability. Therefore, I refused, on my own authority.

The Witness: In the main I would say that Mr. Corbett and Mr. Green accommodated us as to what he did with the machine. I have only that one exception.

Q. You have discussed at considerable length the possibilities of the device as operated at Joplin, Mo., by Bern. Clutter, that is, the drop bottom device. Did you see that operate, or any portion of it? A. No, sir.

Q. So that your testimony as to whether or not that device would operate in any particular is based merely upon your own opinion, is that not right? A. Based upon my opinion, in view of the exhibits and testimony as to what the device consisted of, yes.

The Court: If neither counsel want those letters, the Clerk had better take them. Do you want them, Mr. Williams. They are the Bern Clutter correspondence.

Mr. Williams: I want to look at them.

Mr. Corbett: That is all.

CROSS EXAMINATION by Mr. Reed.

Q. Mr. Downie, when did you first make a tooth like these shown in Plaintiff's Exhibit P-63, the wooden model? A. That would be—

The Court: Is that a wooden model of the two claimed to be infringed?

Mr. Reed: No. He says it is a forerunner of the tooth of the four Downie patents.

The Witness: A forerunner—this is the tooth.

Q. P-63? A. P-63, which we first used. It is the first tooth of this form which we used commercially. Does that match what you state? And it was developed

—to answer Mr. Reed's question, this tooth was developed in September, October or November of 1924.

Q. When was it first used commercially? A. In December, 1924, or very early in January, 1925.

Q. You questioned my statement that this was a forerunner of the patent. Do you consider this as within the patent? A. Yes, sir.

Mr. Reed: That is all.

The Court: Anything further from you, Mr. Richey, outside of this other issue, we do not want to go into that at this time.

Mr. Richey: What was the last question and answer?

(Last two questions and answers read.)

The Witness: I would like to state, further, on that answer, the patent was drawn, in other words, upon this tooth for the protection of it.

Mr. Richey: Now we will recall Mr. Downie for this other testimony.

The Court: Is he going to be here right along?

Mr. Richey: Yes.

The Court: Why not take it up after you get through with all these patents?

Mr. Richey: All right.

The Court: You are excused for the present.

Thereupon the plaintiff called ROBERT C. SESSIONS, who, being first duly sworn, testified as follows:

DIRECT EXAMINATION by Mr. Richey.

Q. Mr. Sessions, you have been present during the testimony of Mr. Downie all of the time, have you not? A. Yes, sir.

Q. You have examined all of the prior art patents he has discussed, have you not? A. Yes, sir.

Q. You have examined the photographs and drawings of all these other machines illustrated here in the defendant's exhibits, have you not? A. Yes, sir.

Q. You were present at the test of the Osgood machine on March 11th, 1931? A. Yes, sir.

Q. Do you or do you not agree with the opinions expressed by Mr. Downie as to the operations of these various machines and their advantages and their comparisons with the machine of the patent in suit?

Mr. Corbett: We would like to enter an objection to this question and any answer thereto, based on the ground that it is entirely contrary to the rules of evidence for any witness to merely O.K., or say yes, to a long line of testimony given by another witness; secondly, because the qualifications of this witness, as set forth when he originally went on the stand, indicate that he is clearly not qualified to answer that question.

The Court: Why do you make the latter statement, Mr. Corbett?

Mr. Corbett: The witness stated, in the first place, that he only observed, closely observed, this back hoe machine over a period of one day.

The Court: I guess that is true, Mr. Richey, he has not the same practical experience as Mr. Downie has.

Mr. Richey: No, that is true.

The Court: Of course he could not testify from a practical point of view, could he?

Mr. Richey: No. But I asked him about his opinions.

Mr. Corbett: I also believe, Your Honor, it is unprecedented for one witness to cover the same ground another one has, an expert witness. Objection on that ground, also.

The Court: I am trying to save time. This witness testified on direct examination.

Mr. Corbett: Surely.

The Court: How long do you think it would take to go over this?

Mr. Edgerton: About an hour or an hour and a half.

The Court: Let us go over it then, if counsel does not want to expedite it.

Mr. Corbett: I do want to expedite it, but I feel—

Mr. Richey: All right. Let Mr. Edgerton examine him.

DIRECT EXAMINATION by Mr. Edgerton (Continued).

The Court: I refused to do it when he first testified. It seems to me now we have reached a point where we can all save time by doing that; and he can tell the instances in which he did not agree with this witness.

Mr. Corbett: I hate to drag it out as much as anyone, but I do not feel that I could.

The Court: All right. Go ahead, Mr. Edgerton.

Mr. Richey: We will make it as short as we can.

The Court: All right.

Q. Referring, first, to the references discussed on the Clutter patent by the defendants' experts, will you take up the following patents and describe them briefly: Rood, 386,438; Rood, 1,057,457; Webber, 557,350; Webber, 528,312; King, 579,589; Jobb, 11,496; Olson, 826,051; Fairbanks, 892,508; Fairbanks, 1,056,268; Bishop, 1,100,864; Mahoney, 1,194,264; Sweet et al., 1,208,230; using any charts or drawings you may wish. A. Patent 386,438, to E. O. Rood, is a machine for digging two parallel ditches; the machine is constructed with two booms, and a complete duplication of parts, as far as the stick and scoop are concerned. This chart No. 1 shows a reproduction of Fig. 5 of the patent, in which only one of the booms is shown. The operation of this machine is such that the line No. 22 of the patent acts as a combined haul and hoist line, that is, in the digging operation, as the scoop is passing through the dirt, the boom is stationary. The scoop is pulled through the dirt by the line 22. When it reaches a position against the lower side of the boom, line 22 then acts to raise the boom, and, as it is being raised, there is provided, as seen in Fig. 13 of the patent, a sloping trap. This also appears in Fig. 1 of the patent drawings. This sloping trap, which is not shown on this large drawing, but is under the roller marked 5, is so positioned that the scoop is swung out of the ditch as the boom is elevated. The scoop is provided with a line 18 which is the dumping line. When the boom is raised off to one side of the trench, it is held in its elevated position; and the pulling on the line 18 causes the scoop to be extended, as is shown in Fig. 5 of the patent, for dumping by simple inversion. This machine as it is shown and described in the patent is equipped with two complete sets of all these parts, as I have said before, and these parts are so connected that when one is down in a trench digging, the other one is up in the air in the dumping position; and they serve more or less as counterbalances, one against the other; and this condition exists because of the fact that the drive shafts for the two units are rigidly connected together, so that, as one is going up, the other is coming down, and vice versa. For this reason any such action as obtained by Clutter in stick change of direction of operation for overcoming an obstacle in a trench, or what has been termed packing or pawing of the scoop, is utterly impossible because of the counterbalance action of these two scoops on the end of their respective booms. If the operator attempts

to reverse his position of the scoop in the trench, similar motions would occur in the scoop which is up in the air, and this scoop in the air would merely be waving around.

The Court: You could not strike a gravity blow with that machine either?

A. No, sir. Any repeated motion by either scoop would be prevented by the counterbalance of the opposite scoop, of course, as I explained. During the digging operation the scoop is limited to motion through a fixed arc in only one direction, at only one level. The boom is held down for the digging by means of a spar C which, at certain stages of the digging operation, is necessary, because if it were not for this spar, the boom and scoop would be lifted out of the trench because of the fact that a single line is used for both the hauling in on the scoop for the digging operation, and for raising the boom after the scoop has been swung around into the completion of its digging stroke. This scoop, as shown in the patent, is not capable of ditch digging a single width trench because of lack of any means for cutting a clearance for the scoop, and the fact that the bail is attached to the outside of the scoop, and the trench would not be cut so that the scoop would clear itself.

The patent to C. W. Rood, 1,057—

Mr. Edgerton: Pardon me, Mr. Sessions.

Q. Before passing to that second patent, do you agree with Mr. Turner and with Mr. Downie that the Rood machine is the best reference against the Clutter patent?

Mr. Corbett: Objection.

The Court: Let him answer.

A. Yes, sir, I do. I think that this is not very close to Clutter, but it is nearer than any of the other references.

Q. Now you may take the next one. A. The machine of patent 1,057,457, to C. W. Rood, is a machine which has a combined haul and hoisting line, as the other Rood patent. The boom is stationary in a fixed position during the digging operations, and the scoop travels through a fixed arc. The combined haul and hoist line is the line H of the patent. The line I in the patent is the dumping line for inverting the scoop. The scoop is pivotally mounted or mounted in a non-fixed manner on an arrangement of two arms, G and G prime. The boom which is fixed during the digging operation is E. This

patent likewise could not strike a gravity blow because of the control of the boom, and the positions assumed by the bucket during the operation. The scoop is not suitable for single width excavation because of the fact that it does not cut a sufficient clearance. This machine does not permit the manipulation of the scoop in any one of the four directions at any instant by means of control of two levers by the operator, as does the Clutter machine.

Q. Will you take up the Webber patent, now, please, 557,350? A. The patent to Webber, 557,350, shows a machine which has been termed a Vulcan machine, at times. This is a machine of the general class of an outstroke machine, turned around to act in such a way that the scoop moves toward the machine instead of away from it. It embodies all of the elements of an outstroke machine, in that the stick is moved in and out under power control in two directions, and power control in a third direction is obtained by means of the hauling life which is attached to the front of the bucket.

The machine of this patent, and also the machine of the Webber patent 528,312, are similar in all general respects; the differences relate to the general construction of the overhanging supporting member. This machine corresponds in all particulars to the outstroke machine. It is merely a matter of a strong overhanging beam, long enough to be unsupported at one end so that it can have mounted out at that point the ordinary stick and bucket combination of the outstroke machine, in such a way that the scoop moves in towards the machine instead of away from the machine. The machine cannot be operated with the stick in a direction beyond the vertical because there is no means for sending the stick out that way except the slight over-swing that may come as the stick is allowed to fall downwardly, it may swing up slightly, but not appreciably, beyond the vertical position. Any gravity blow would be when the stick is coming down and would be on the back end of the bucket; it would be a drop on the back of the bucket, but not a gravity blow in the sense of any digging blow. The machine operates in its digging only by the power of the machine, as do all other of the outstroke type of machines. This machine is totally unsuited for a gravity blow or picking or hoeing. It cannot accomplish single width cutting because of the design of the bucket, which is not proper for clearing. The bucket is an end-dump bucket.

The patent No. 579,589, to King. This patent falls in the same classification as the Webber patents which I have just been discussing. It is similar to an outstroke machine, except that a beam structure has been built up overhead, a massive structure suitable for supporting the stick at the end of that so that the bucket can be operated inwardly towards the machine instead of out, as is more commonly done. This patent is not of course capable of striking a gravity blow or of picking. It cannot be used for single width trench work. It has the same sort of control as the Webber patents, in that there is a line for hauling the bucket through the material, and a power drive mechanism on the stick by means of which the stick is moved in two directions by power. This machine of the King patent is the machine, I believe, which was used in the Phosphate rock digging in South Carolina, which was discussed. This machine is no more capable of digging hard materials, in the sense that the Clutter and Downie machines are, than are any of the other ordinary outstroke machines.

The next is Jobb, British patent, 11,496, of 1903. This, again, is the same sort of idea as the King and Webber patents, that is, a reverse outstroke machine. It has six, a haul line; line 16, which is a dump line for, I believe, opening the end of the bucket; and the stick is moved by power in two directions through a rack and pinion arrangement. The machine dumps only in one position, that is, with the scoop drawn up toward the machine, and with the stick in a horizontal position. This machine of course is not capable of striking a gravity blow, or of performing the desirable functions as accomplished by the Downie and Clutter patents.

Patent 826,051, to Olson. This machine has numerous power control lines; a line 28 is the hauling line; line 30 is a line which causes the stick to be pulled up through a sleeve 22, attached to the boom; and this line 30 can, to a certain extent, pull the scoop up beyond the position in which the stick is vertical. Line 14 is attached to the boom. This line is apparently used for raising and lowering the boom, although I don't think that the operation is such that the boom is raised and lowered very often. This mechanism is of course suitable only for being pulled through very soft material. The stick is free to rotate in this sleeve 22, so that the bucket striking an obstruction on one side or the other would cause and allow the stick to turn in the bucket, to swerve from one side

or the other; and very little downward pressure is obtainable. The only downward pressure of the material is due to the weight of the stick and the bucket resting upon the ground. The machine cannot strike a gravity blow. The scoop is of the end-dumping type.

The next is patent 892,508, to Fairbanks. This machine has a fixed boom, that is, the boom cannot move vertically; it is only free to swing in a horizontal position. Any digging that is done is done in the inner quadrant; that is, the stick is not extended beyond the vertical; the digging is done solely toward the machine. The stick slides through a fixture 24, so that it moves up or down to suit the elevation at which the digging is being done. The scoop moves during the digging on a fixed arc toward the machine. The discharge of this machine is, or the radius of discharge, the zone in which discharge can take place, is naturally very limited. The bucket or scoop 48 is loosely pivoted to the end of the stick 25, so that this bucket does not have the fixed presentation, during the digging operations of the Clutter and Downie patents. It is impossible to use this scoop for single width cutting because of the character of the attachment of the bail to the scoop, and the fact that the scoop is not, and the pivots which connect the stick to the scoop extend out beyond the sides of the scoop, so that they would be seriously worn and destroyed in digging in a single width trench. The scoop is discharged by allowing the bucket to trip downwardly so that the material falls out of the open mouth of the bucket. This machine is not capable of striking a gravity blow.

Patent 1,056,268, to Fairbanks, employs a combined hauling and hoisting line 22. This line acts to pull the scoop into the material, and then to elevate the scoop and boom 11. The scoop is retracted or moved outwardly away from the machine by means of another line, 23. The digging cycle of this scoop is really in a vertical direction through the material up the side of a bank. The scoop is swung in to enter the material and pull upwardly, so that the digging occurs only in that one cycle. The scoop is provided with a gate 16 which, during digging, swings back against the back wall of the scoop and in the dumping operation is pulled out to force the material out of the front end of the scoop. When the scoop is extended beyond the vertical position, the gate is towards the front of the scoop, and this would have a serious effect if any attempt were made to strike gravity blow with

this scoop, although, as a matter of fact, by the use of this combined hauling and hoisting line 22 and the scoop inverting line, there is no means by which a gravity blow could be struck with this scoop. This machine of course is also not capable of cutting a single width trench or ditch because of the mechanism surrounding the scoop and the type of that mechanism.

The next patent is 1,100,864, to Bishop. The machine of this patent is an entirely different class of machine from that of the Clutter patent or the Downie patents in that the boom F is held in a fixed position during the digging stroke of the scoop. The stick Y is pivoted to the ends of the boom, and the line 7, which is used to elevate the boom, is attached to the pivot point of the stick and the boom. Because of this fact the stick cannot be extended beyond its vertical position, and the digging must occur from the vertical position of the stick inwardly towards the machine, and only in that range. The digging is done on a fixed arc, and the machine is dumped in a single position by means of a mechanism whereby a lever attached to the stick comes in contact with another lever, small Q, attached to the fixed boom E, so that the scoop is dumped in that one, and only one, position. The machine cannot strike a gravity blow; is not capable of cutting a single width; is not capable of digging in hard ground any more than ordinary outstroke machines.

The next patent is 1,208,230, to Sweet, et al. This is a machine which has a fork-like arrangement at the end of a stick. This is not of course, in any sense of the word, a scoop, as we are talking about in this case; but the stick to which this mechanism, fork or other mechanism, 79, is attached, is arranged to slide up and down through a sleeve at the end of the fixed supporting member 62 and 59. This stick is marked 69 in the patent, and it can move up and down through the sleeve. This patent of course does not show a boom which is free to move in a vertical plane. It employs at least three lines in its operation, lines 71, 84 and 87.

The Mahoney, 1,194,204, is a machine which uses three power lines. These lines are the line 50, which is used to haul the bucket in toward the machine, the line 44, which hoists the boom and is continued around the sheave 33 at the end of the boom to a point at the lower end of the stick 40. This connection is at 35, so that the stick may be extended beyond the vertical by the action of this line. The third line is the line 34, which passes

over various sheaves to the sheave 36, at the rear end of the scoop, and then extends up to the point 35 at the outer end of the boom.

The Court: Is that the same machine used in the cornfield?

A. No, sir, this is not the same machine. It is the same man. The details of this machine are different from those of the cornfield machine.

The scoop 38 of the Mahoney patent is freely pivoted to the end of the stick, and the hauling bail 48 is connected to the same pivot point as the stick. This sort of a connection is such that this scoop can only be drawn through very soft materials. Any obstruction would cause the scoop to cant up or down and would result in considerable difficulty in operation. This machine cannot strike a gravity blow because the scoop is tail heavy and freely pivoted to the end of the stick. In attempting to raise the stick and allowing the scoop to fall to strike a gravity blow, the rear end of the scoop will drop down so that the teeth will not properly be presented to the ground. It might be attempted to—or rather a suggestion has been made by Mr. Turner that the line 34 could be so controlled that the teeth could be held in the proper position for striking a gravity blow. But the line 34 is controlled by a second operator, and that means the coordination of the three power lines by two men, which would, in my opinion, be impossible to do successfully for doing commercial digging where gravity blow work is required; or any work, not necessarily a full gravity blow, but merely quick reversals of the scoop back and forth for loosening the material, as is done in the Clutter and Downie machines, is impossible in this machine because of the pivoted attachment of the scoop to the stick. A reversal would cause the scoop to tip one way or the other, as can be readily seen. This scoop does not have any side rake teeth, and cannot be used for single width cutting because it would not cut a clearance for the pivot to the stick and the bail; the bail and stick would interfere with the sides of the trench. This scoop is discharged by hauling in on line 34, causing the rear end of the scoop which has previously swung down to be elevated and allowing the front open end to swing down to allow the material to fall out. In any attempt to extend this stick and control the position of the scoop, there is also involved the proposition that the scoop is freely pivoted, so that this line 34 is acting to do two

things; it is acting to extend the scoop, and the force on the line to do that would probably be such that the operator could not have any definite control over the position of the scoop.

Q. There has been some discussion about the Mahoney cornfield machine. Will you discuss that briefly, please. It is the Defendant's Exhibit—

The Witness: This is it.

Q. It is an enlargement of one of these Exhibits 34, I think.

Mr. Corbett: Are you offering the photographs in evidence?

Mr. Edgerton: Yes. You offered them in your deposition.

Q. You may discuss that. It is Defendant's Exhibit No. 4. A. The Mahoney machine, which has been called the cornfield machine, has a scoop freely pivoted to the end of a stick. It employs a line for hauling the scoop toward the machine; a second line which passes over a sheave attached to the top end of the stick through a linkage, apparently; and then down again to be fixed on the end of the boom. This second line is used for raising and lowering the boom, and there is another line which runs from a winch on the right hand side of the machine as one looks at the machine in the photograph, over a sheave attached to the very extremity of the boom, down to a smaller sheave attached to the rear end of the scoop by means of a cross connection rod; and then up and dead-ended on the boom at a point just slightly inward from the sheave at the very boom which this line has just previously passed over. This line is power driven, as are the other two, and is used for dumping the scoop which is tail heavy and which, when loaded, assumes the position with the open end upward, and in order to dump, it requires the operation of power to reverse and swing the open end down. This swinging taking place in the pivot which connects the scoop to the stick, so that it can swing freely. This machine is provided with a strut or spar on the outer side of the stick, and this spar is pivoted at the upper end of the stick, and extends downwardly to, apparently, contact with the back side of the top of the bucket, just how this contact is made cannot be clearly seen; but obviously the purpose of this spar was to prevent the back of the scoop from lifting up and canting or allowing the front of the scoop to tip down-

wardly when an obstruction is struck. This spar makes this scoop semi-fixed in a sense, but in no sense fixed, during its digging operation, as is the scoop of the Clutter and Downie patents; and of course this machine is not capable of striking a gravity blow, as I described in connection with the Mahoney patented machine, that is, the machine of the Mahoney patent, No. 1,194,204. This machine, in the sense of having a semi-fixed bucket during the digging operation, is somewhat closer to the Clutter patent than the machine shown in Mahoney patent 1,194,204.

The machine of Defendant's Exhibit No. 5 is another one of these Mahoney machines in which these same three power lines are used. The scoop does not have the spar or strut of Defendant's Exhibit No. 4. It does not have the linkage at the top of the stick to which the sheave is attached. The sheave at the top of the stick in the case of Defendant's Exhibit No. 5 is attached between spars which form extensions to the upper end of the stick, and are not pivotally connected to the stick. This machine is like the other Mahoney machines, in that it is incapable of striking a gravity blow, can only operate in very soft material, and cannot be used to cut a single width. An attempt has been made in this machine apparently to attach cutting blades or supporting pieces which have been marked X on Defendant's Exhibit 5, to the rear end of the scoop at the bottom. These apparently were used in an attempt to force the front end of the scoop downward as it is being dragged through the material and make it bite into the material, and also probably to loosen the material at the sides somewhat, although they are not in a position to be of any value in cutting a single width trench. This machine of Defendant's Exhibit No. 5 is also, in my opinion, further away from the Clutter patent, or not as close to Clutter, as the machine of Defendant's Exhibit No. 4, because this machine also does not have the spar which gave the scoop of Defendant's Exhibit No. 4 a semi-fixed position during the digging operation, and this machine employs a sheave at the top of the stick which is directly connected to the stick, rather than pivotally connected through a linkage.

Q. Now will you take up the patents discussed in relation to the first Downie patent, and discuss them briefly. Butler, 493,421, I believe, is the first. A. This patent to Butler, 493,421, relates to a scraper that has no application to a steam shovel ditcher, or an outward

arc machine. The bottom of this scraper is pivoted to drop down. It is the type of scoop used in drag line operations or work of that sort, where the scoop is in no way rigidly connected to a stick during its digging. The latch mechanism of this patent is not suitable for use with a ditcher or back hoe. The teeth are made from a strap called a plough B in the patent, which is attached to the front end of the scoop, and these do not move with the bottom as is the case with the patent to Downie, 1,511,114. The fact that the scoop was never intended for doing any real digging as far as the sheave on the member B is concerned, is evidenced by the fact that cutter blades or discs are employed in front of the scoop to cut and loosen the material; and this also indicates that this scoop was intended for use in skimming operations, such as cutting off sod off the ground and taking a light, skimming cut over the surface. The scoop is not suitable for single width cutting, because of the pivots and bolts on the sides are not protected. This scoop of course could not be used to perform the rooting operation.

Q. Will you now discuss the Davy patent, reissue, 11,516? A. This patent to Davy, reissue, 11,516, is somewhat similar in general purpose to that of the Butler patent that I have just discussed, in that this is a scoop for use with a drag line or other mechanism which will pull this scoop quickly over the top of the ground. It is not rigidly connected to anything. It employs a—

The Court: We will stop here until seven o'clock tonight.

(Adjournment until 7:00 P.M., May 11, 1931.)

(May 11, 1931, 7:00 o'clock P.M., hearing resumed.)

Q. Will you continue with your discussion of the Davy patent, re-issue, No. 11,516? A. This patent to Davy employs a cutting blade g which is mounted in advance of the scoop proper for loosening the material before it reaches the point of the open mouth of the scoop. This scoop is not fixed to the stick or any other means whereby it maintains fixed presentation of the scoop during the digging operation, and is not capable of cutting a single width trench. This is not a drop bottom scoop, because the entire scoop body is pivoted about the point x and the back end of the scoop drops down when the latch f is released, and the material is discharged through the back end of the scoop which is open when the scoop is swung downwardly about the pivot x.

The next patent is Pugh, 806,288. This patent relates to a mechanism in which the scoop is supported by cables and a sheave block arrangement n-5, and also by a bar n-3, referring particularly to Fig. 2. The machine employs several power lines. There is a power line n-15 which is attached to the front end of the scoop; a power line n-11 which acts on a sheave attached to the scoop; a power line n-4 operates the rack of the rack and pinion arrangement of the stick n-3; there is another power line which extends down the side of the bar r, and still another power line, apparently, which is attached to the outer end of the boom. This scoop is not rigidly mounted; its operation is outward, away from the machine, and upward. Fig. 20 shows the scoop in more detail. It shows the bottom of the scoop, which is a drop bottom scoop. The latch mechanism is such that the latch is opened by a cable connection to the point n-12 on a block holding a sheave at the top of the scoop. This scoop is closed by what is known or has been called snag closure; that is explained on page 5 of the patent, line 45. The teeth of the scoop are engaged in the bank, and the scoop is raised slightly,—or the teeth are engaged in the bank and the pressure thereon causes the bottom of the bucket to close.

This scoop can not be used for single width cutting, and of course this machine in itself is incapable of striking any sort of a blow, and cannot be controlled by two hands of one operator throughout its entire range of motion.

Q. Now, Clutter 1,107,899. A. This patent to Clutter, No. 1,107,899, is for a skimmer scoop. It digs by moving outwardly away from the machine over the surface of the ground. The scoop has a drop bottom. It does not have any side teeth. It has a latch mechanism, shown in Fig. 9 of the patent, which would be totally unsuitable for any sort of ditcher work in which severe blows are struck, because it would open itself due to the forces acting on the latch and on the walls of the scoop. A blow struck on the front of the scoop would cause the latch, as shown in the patent, to swing back and relieve itself. The latch as shown here is not suitable for momentum closure, and of course the pivot bolts for the bottom are not protected in any way, so would not be suitable for single width cutting in trenches. The scoop itself is shown merely as a thin shell of metal, which is not sufficiently braced, and incapable of use in a ditcher or back hoe.

Q. Wagner, No. 1,225,537. And in this connection, kindly discuss the side rake teeth. A. This patent is also a skimmer scoop, like the Clutter patent previously discussed, and much the same sort of a scoop. The latch mechanism is somewhat different, in that the latch itself extends down below the bottom of the scoop, so that this would in itself cause the latch to come open in being dragged through the ground in the operation which the ditchers are subjected to. The walls of the scoop are not rigid, and would be distorted seriously in ditcher action. Fig. 2 shows teeth extending out beyond the sides of the scoop, but as shown in Fig. 1, these teeth are not attached to the sides of the scoop. Therefore I assume they are attached to the bottom of the scoop, and teeth of this sort, of course, are prohibitive in any ditcher work where it is desired to have momentum closure of the scoop bottom, because they would contact with the front edge of the sides of the scoop when the bottom is open and prevent the bottom swinging more than about 90 degrees, not permitting the full 180 degree or more swinging opening of the bottom which is required in ditcher operations. This scoop, of course, as the scoop of the Clutter type previously discussed, is not attached to a stick, and does not function as the scoop of the Clutter and Downie patents, or of the first Downie patent particularly. The scoop of these patents to Wagner and Clutter is mounted to travel in and out along a beam, and the digging is done on a practically horizontal plane at the level of the ground.

Q. Now, there are two more Pugh patents. You have discussed the one patent to Pugh. Take up No. 1,316,485, first, please. A. This is a crane arrangement of the drag line scoop, in which the scoop or bucket is hung by a cable 16 from the end of the boom 7. There is a cable 9 which is used for raising and lowering the boom, and cable 51 which is used for pulling the scoop in toward the machine during the operation of skimming the dirt off the surface of the ground, as in the practice with drag line scoops. This scoop, of course, is not fixed in its manner of presentation to the digging, and it has a bottom which drops. This bottom is connected to the hauling line 51 by a lever arrangement here marked 28 and 30, which is arranged so that the bottom can open only when the hauling line is slacked off. And the latch mechanism also is controlled by a chain 45, such that the latch is open when the sheave supporting the bail 34 is

in a vertical position, and in order to maintain this latch closed the sheave supporting the bail 34 must be leaning towards the rear of the scoop. This scoop has no side teeth, and is not suitable for single width work. Of course there is no such thing as a gravity blow with this, or control in any one of the four directions at the will of the operator at any instant.

The other Pugh patent is No. 1,339,606, and this is a patent very similar to the Pugh patent just previously discussed, in that the scoop is hung from cables at the end of the crane boom. The bottom opening mechanism in this case is a toggle arrangement, 60, and the bottom opens—there is no latch on this scoop, and the bottom opens when the hauling line 19 is slacked, allowing the toggle to break. This scoop has no side teeth. It is not rigidly mounted on a fixed member, so that it has no fixed presentation for the digging surfaces, such as encountered in the back hoe ditchers.

Q. Now, will you please discuss the Morrison patent 1,249,805, referring also to Defendant's Exhibits 76 to 79, 70, 71 and 119-A. A. This Morrison patent relates to a scoop which is split approximately in the middle of the scoop rather than having an entirely drop bottom split on the diagonal. The scoop itself was used on the outward arc machine, but is not a scoop primarily designed for outward arc work, as is shown from the lead angle of the scoop. This scoop does not have side teeth, and can not cut a clearance for a pivot bolt, so that it is not adapted for single width cutting. The latch mechanism as shown in the patent is totally unsuited for any momentum closure, and is unsuitable for use in instroke ditchers where there are gravity blows struck, because the contacting faces of the latch are on an angle and the latch would come open, and the latch itself would tend to open during the striking of gravity blows because of the tendency for the top part of the latch to continue its motion towards the scoop body and open the latch. The scoop itself is clearly designed so that the bottom does not open completely in the normal dumping position of the stick. The Defendant's Exhibit 77 shows that the bottom is unlatched, and shows the normal position in which this bottom hangs when the scoop is in this position, which is in the dumping range. The tendency of a scoop of this sort of course is to not open sufficiently unless there is a load in there of comparatively dry material which in itself would force the scoop open

as the load is being discharged, and as the load passes out of the scoop, the gravity acting on the bottom will cause the scoop bottom to swing in and close itself. That is also true of this scoop of Defendant's Exhibit 118. This scoop of the Morrison patent is connected to the stick by means of pins which are in shear, the connection being very similar to that used on many of the outward arc scoops. The bottom of this scoop, furthermore, can not swing down much more than 90 degrees under any conditions because of the fact that the side plates of the bottom would contact with the side plates of the top part of the scoop and prevent this full 180 degree or more of swing opening which is required in ditcher scoops.

The scoop which has been called the Bucyrus scoop shown on Defendant's Exhibits 119-A, B, C and D, and as shown in this blue print, Defendant's Exhibit 118, is a very massive cast steel scoop, which, from the testimony, weighed some ten thousand pounds, I believe; I think it was maybe more than that, but it was a very heavy cast steel scoop, a large scoop,—much larger than the scoops used on ditchers. The features of this scoop are much the same as the scoop of the Morrison patent. There has been a change in the bottom, in that the line of opening is more nearly parallel with the line of the bottom of the scoop, and, as in the case of the Morrison patent, the scoop does not have side teeth which would cut a clearance for the pivot bolts of the bottom. It has an excessive lead angle for ditcher operations. The scoop is attached to the stick by the same sort of connection as is used in the Morrison patent. The latch mechanism of this scoop has been changed somewhat from that of the Morrison patent, although the latch itself is still on an angle and would tend to come open in operation. A toggle arrangement has been applied to the scoop as shown at the point 9 on the blue print, Defendant's Exhibit 118, apparently in an attempt to develop a means for holding this latch closed. Both of these scoops are of a quite different type of scoop from that used in ditcher operations. This Bucyrus scoop has the same objection as the Morrison patent scoop in that the bottom will not swing under any conditions open more than about 90 degrees because of interference between the teeth at the sides of the bottom and the side walls of the scoop.

Q. Now, the patents to Keith and Hoar—Keith 1,315,512. We have no chart of that. A. This patent to

Keith is for a machine which has a scoop attached to the bottom of a stick which is pivoted to the end of the boom. The machine employs three power lines, 26, for moving the upper end of the scoop toward the machine or moving the scoop a proper distance away from the machine; line 24 for pulling the scoop toward the machine; line 16 for raising and lowering the boom. This machine does not use a drop bottom and the scoop itself is quite improperly mounted on the end of the stick for ditcher operation because of the type of small bars, 23, which are used for the connection between the scoop and the bottom of the stick.

Q. The Hoar patent, No. 1,322,570. A. This Keith patent, to go back to it again, employs a stick which has a solid, apparently wooden, beam, as shown in these drawings, and does not use a channel iron stick.

This patent to Hoar, No. 1,322,570, is a machine devised primarily for use in coal mines where the head room is low and it is desired to dig on the level of the machine. It is an outward arc machine. The scoop acts, as shown in Fig. 3, down on the level of the machine, swings outwardly away from the machine, and the member to which it is attached is then drawn in over the top of the machine to provide means for dumping the scoop over the back end of the machine, either through a chute member which makes up the attachment to the stick, or the scoop may be dumped in the position shown in Fig. 1 by dumping through the end door of the scoop. This stick is made up,—or this member for supporting the scoop is made up of two channels, 18, which have their flanges pointing outwardly. The functions and the operation of this stick are totally different from those involved in ditcher operations such as the ditcher operations of the Downie patents.

Q. There is an illustration on the top of that chart, of the American railroad ditcher, from a catalogue, one of the defendant's exhibits. Will you please discuss that illustration? I think that is on page 37. A. This is an outward arc machine employing at least three power lines, one for moving the scoop outwardly, one for retracting it apparently here, and a line for raising and lowering the boom. The scoop is dumped by being pushed against a plate, bent from the end of the boom so as to force the material out of the scoop. The dumping, of course, is intended to be only in one position, over the tops of the cars, or, if it should not be over the tops

of the cars, it is at this one position with the scoop extended out towards the end of the boom. The stick in this case, or handle for the scoop, is pivoted to the under side of the boom. There is no upper arm to this stick, such as in the Downie patent. The stick is made up of a structural member of some sort, but of course the operation of this ditcher, as far as the stick is concerned, is different from that of the Downie patent, in that the machine is not used for striking gravity blows and is not used for single width cutting.

Q. Now, the patent to Olson, 826,051,—kindly discuss that structure. A. I discussed this patent in connection with the Clutter patent, and I think the same remarks apply there, as far as the first Downie patent is concerned. It is not a drop bottom scoop. The scoop proper is not mounted to the end of the stick in a manner suitable for back hoe use, wherein the blows are very severe. As I said in connection with the Clutter patent, this stick slides up and down through a sleeve, and the stick is free to rotate, so that the scoop is not fixed in its presentation to the material.

Q. Will you discuss the Joplin machine now please, referring to any drawings or exhibits here on the subject. A. May I have that Exhibit 26, I believe it is. This machine embodied a Clutter ditcher to which a scoop was attached. The scoop is somewhat of the type of skimmer scoops. It was attached in a manner such that the scoop could not swing downwardly, as it did in Clutter, because a wood block had been placed under the pin marked "pin for supports" on this blue print, Defendant's Exhibit 26. This, of course, does not serve in any way other than the latch itself of the original Clutter patent as far as maintaining the scoop in position is concerned. It merely makes it impossible to dump the scoop by allowing it to fall down. During all the digging operations of the scoop of the Clutter patent, the scoop is held in place by this latch member, which is just as rigid as the wood block; in fact a wooden block after operation for a short time would probably become splintered and allow considerable play up at this point where there is the pin for support. The scoop itself is not mounted any more rigidly than the Clutter scoop. The scoop braces or scoop supports, as they are called in this blue print, are just the same as those of the Clutter patent. The bottom of this scoop as it is shown here could not be closed readily by momentum because of the fact that the latch is so

constructed that it will not—the point of engagement is a very small one and the chances for its engaging are very slight because of the small distance through which it can travel and be engaged or not engaged. The latch as shown in this blue print does not have any spring or other mechanism for holding it in a closed position. A scoop of this sort, which consists of three walls practically unsupported,—no braces or other members for making it rigid, with a stick mounted in the middle of the back wall so that the forces of operation apply through the teeth and through the stick attachment to the middle of the back wall, would be seriously distorted in actual operation, as is represented in Plaintiff's Exhibit P-71, showing how the sides would buckle and the end wall would bend inwardly to destroy the latch connection and tend to open the latch if it was closed. Even slight bending motions in these side walls of this scoop would have very serious effect on the pivot bolts of the scoop in which it is desired to use momentum closure, because those pivots must be such that the bottom swings very freely and must not bind or become damaged in any other way, or else it is impossible to properly close the bottom by momentum, as is done in ditchers, because the bottom must be swung through a considerable arc; it is not a mere matter of closing by the weight of the bottom alone as is the case in the outward arc shovels.

Q. In your discussion you referred to the Clutter patent. Did you mean the Clutter patent 1,107,899, Defendant's Exhibit 25? A. No; I was referring to the patent in suit in my discussions up to this time.

This scoop as shown in Exhibit 26 is somewhat similar to the scoop as shown in Fig. 9 of the Clutter patent, No. 1,107,899, however, the main difference being that the latch mechanism of the Clutter patent, 1,107,899, employs a spring for keeping it closed. Of course this Clutter patent which I am now speaking about relates to a skimmer scoop; it is not the type of scoop of the ditcher at all. This scoop and this machine, of course, is incapable of single width cutting, because it has no side teeth.

Mr. Corbett: Your Honor, I think it ought to be clear on the record here that this witness is only testifying from one exhibit, and that when he says there is no spring on that Bernard Clutter device,—Joplin device,—he is going contrary to the testimony, and that is true about the side rake teeth,—the depositions of these witnesses.

The Court: That is a matter of argument.

Mr. Corbett: I want to have it clear on the record, so it won't be confused.

The Court: Well, that clears the record. Anything further.

Q. Are you through with your discussion of that? A. Just a minute. This machine, of course, did not make any advances over the Clutter in the construction of the stick, the connection between the stick and the end of the boom, and the linkage of the Clutter patent; did not provide the long pivot bearing at the end of the boom of the first Downie patent. This matter of distortion of the end wall and the side walls in operation of a scoop of this sort would affect the latch, whether or not a spring is used.

Q. Now, with respect to the form,—what patents do you consider in connection with the first Downie patent, that is, the form of the bucket? A. I don't understand the question.

The Court: You want to get the closest reference?

Q. Yes, the closest reference with respect to the form of the bucket, and also the digging and functioning? A. Well,—you want me to discuss—

The Court: No; which one is the closest reference?

The Witness: Well, the scoop of this Clutter skimmer patent, of course, is one that looks something like the scoop of Downie, but it is not made to act as the Downie patent. That is the scoop which Mr. Ferris picked as the one appearing nearest to the Clutter patent, in appearance,—I mean the first Downie patent, as far as the scoop is concerned.

The Court: Which one did you say that was?

The Witness: I say that some of these skimmer scoops look as much like the Downie patent in outward appearances; of course they are not suitable for use—

The Court: Well, you testified to that. All right.

The Witness: Now I don't feel that any of these scoops in themselves—there is no combination that completely—that will equal or come near to that of the first Downie patent.

Q. Now, discussing the first Downie patent with reference to infringement, in the Osgood structure did you find from your observations spaced bearing brackets, and will you please discuss that? A. The Osgood structure does not have two bearing brackets. It has a wide

bearing between the stick and the end of the boom, which is the same in all functioning and operation and accomplishes the same results as two spaced, widely spaced bearing brackets of the first Downie patent.

Q. With respect to the scoop and the rear of the open end of the placing on the stick. Will you discuss that, please? A. This scoop of the Osgood patent,—I think if I had the chart this would be more readily seen; that is, the defendant's exhibit, their chart No. 101 or 102, I believe.

Mr. Corbett: You mean the chart showing the Osgood structure; is that what you mean you want?

(Chart produced)

A. (continuing) The stick of the Osgood patent is attached to the scoop in rear of the open end of the scoop. It has the front end of the stick as flush with the front end of the scoop, but nevertheless it is even technically, in my opinion, in the rear of the open end of the scoop,—in any interpretation that might be put on that connection.

Q. Referring back to the Mahoney machine, have you any model or method of illustrating what you mean by the term that the bucket would heel over? A. I have a little model here, which is primitive but serves to very well represent the kind of scoop of the Mahoney patent, in the lack of rigid mounting; that is, can be controlled by the numerous power lines,—three power lines. The bottom of the scoop is, of course, heavy, and it is readily seen what will happen when the scoop is lifted up, and as the scoop is pulled along you can readily see what is meant by the non-fixed presentation of this scoop, in that it strikes a slight obstacle and tends to cant and tip, which is totally different from that scoop evolved by the Clutter, which is rigidly mounted during digging operations, and it can be readily seen that in order to properly manipulate the scoop to maintain the bucket in any fixed relationship with the stick it would require very careful co-ordination between the man controlling the line attached to the rear of the scoop and the man controlling the hauling line or the line which raises and lowers the boom.

Mr. Edgerton: We offer in evidence the model the witness has just used, as Plaintiff's Exhibit B-72.

Mr. Mahoney: We object to the use of that thing as a model, because there is nothing to show that it is constructed like the Mahoney device; just a crude looking affair, and we therefore object to it.

The Court: Well, the objection will be overruled.

Q. Referring now to the third Downie patent, and considering first the patent to King, 589,565. Please discuss this patent. A. This patent to King, 589,565, consists of a scoop for an outward arc machine, and it employs bolts w-3 for attaching the scoop and stick in a manner so that by changing the hole in which the bolts U prime are used, the scoop may rock slightly, and the angle of lead of the scoop or the angle of the teeth to the material may be changed. These bolts U' do not eliminate shear in themselves; that is, they are mounted so that they are subjected to shearing stresses, and will not in any way accomplish the results desired in the mounting of the third Downie patent, No. 1,709,466. Of course this stick itself is not connected to any overhead bail or girder across the top of the stick as is the case in the third Downie patent. This King patent does not employ any of the angle clips, such as the clips 27 of the third Downie patent.

Q. Now, in connection with Defendant's Exhibits Nos. 59, 57, 56, and 60, please discuss the mounting of that bucket. The chart here, as I understand it, represents substantially the same illustration as Exhibit No. 59, and you may refer to that chart if you like.

The Court: That is the third Downie, now.

Mr. Edgerton: Yes, Your Honor.

The Witness: This is the Thew shovel. The point in question particularly is the connection between the scoop and the stick. It is an outward arc machine. The scoop is attached to the stick by means of the pin A and the bolts B. The pin A is a shear pin; the bolts B are tension bolts. This connection differs from the connection of the third Downie patent in that it employs a long shear pin wherein there is wear; the holes become enlarged, and play develops, which is harmful in the operation of ditcher machines; the instroke type back hoe; the digging operations on the back hoe machines are more severe as far as their effect on the connection between the scoop and stick is concerned, and the wear which would develop in the pin would be more pronounced even than would be the case on outstroke machines. This connec-

tion also employs several bolts passing through the hole in the part shown as Fig. 4 on Exhibit 59; and there are further bolts connecting the parts marked Fig. 5. These bolts would also be subject to shearing stresses. This scoop, as is indicated on Exhibit 60, is swivel mounted on the arm or stick, so that it is free to turn sideways, that is, it is not fixed from side swing in its mounting.

Q. Are you through with the discussion, Mr. Sessions? A. Yes, sir.

Mr. Edgerton: That is all.

The Court: Cross examination.

Cross Examination by Mr. Corbett.

Q. These various patents which you have discussed, will you state how many of the devices of each patent you have ever seen in operation? A. As far as I know, I have not seen any of them except the devices of the patents in suit, and of the defendant's that I have been discussing.

Q. In talking of the Rood patent 386,438, you stated that it was not capable of digging a single width trench because it did not have side rake teeth; that is correct, is it not?

The Court: He said that of a good many.

The Witness: Yes, I think I said that, as one of the reasons why it was not capable of digging a single width trench. Rood, 386,438, is not mounted in such a way that the clearance would be cut for the pivots connecting the bail, and it would cause serious wearing at this point. The bail would interfere with the sides of the trench.

Q. You have to have side rake teeth to overcome that, is that right? A. The side rake teeth prevent wear on these parts, where it is not desired to have wear.

Q. The question is, will an in-stroke ditcher cut a single width trench if it does not have side rake teeth? A. It might for a while, yes. You would soon run into serious trouble and difficulties.

Q. How soon? A. In the course of operation the pivot bolts are subject to serious wearing.

Q. What pivot bolts? A. The pivot bolts or any projection on the bucket which sticks out.

Q. You do not make the contention that it is necessary to have side rake teeth in order to dig single width trenches with an in-stroke ditcher? A. Yes, sir, I do,

in connection with many types of material through which you are digging. Parts of the scoop itself are totally unsuited for cutting side walls. In soft materials the projecting pieces such as bolts and things extending out causing interference on the side may be sufficient to plough their way through the sides of the trench and make the cut. But otherwise for all classes of work the side teeth are absolutely essential to make an all-around type of machine.

Q. Your position is that if it does not have side rake teeth, it will not be an in-stroke ditcher suitable for all-around work for the digging of single width trenches, is that correct? A. Yes, sir.

Q. I wish you would refer to the Clutter patent, which is the first patent in suit, 1,317,431, and point out anything in the specification which shows that this device has side rake teeth?

The Court: What number, Mr. Corbett?

Mr. Corbett: The first patent in suit, 1,317,431, to Leroy Clutter.

Witness: As far as I can see there is nothing said about any kind of teeth in this patent to Clutter. Teeth are shown on the sides of the scoop in the drawing shown in Figure 1, but they bear no reference numeral, and I don't believe any point was made of that.

The Court: Are there side rake teeth on Figure one?

A. That is difficult for me to say from the figure whether they are side rake teeth or not.

Q. The thickness of each of those teeth is the same as shown in that drawing? A. Yes, sir.

Q. You do not see any teeth on the side of that scoop in that Figure 1, the side which you are facing, is that not correct? A. There is one coming up the side somewhat.

Q. On the side you are facing? A. Yes, sir, there is a tooth above the bottom of the scoop there on the side.

Q. It is the same thickness as the tooth below? A. As shown here it is the same width between the lines.

Q. And if it were turned on edge to be side rake tooth, it would be equal, would it not? A. I don't know what it would be. This tooth might be extended outwardly and form side rake tooth, or not. I cannot tell you from this drawing. As far as I can see, there is no particular point made in this patent as to the teeth.

Q. In spite of the fact that you have made it a point in practically every patent you have discussed here to-

night, the fact that you must have side rake teeth for single width trenches? A. Yes, sir.

Q. In face of that you are unable to point out any reference to such a thing as that in the Leroy Clutter patent, is that right? A. Yes, sir.

Q. You have spoken several times about fixed presentation, have you not? A. Yes, sir.

Q. What do you mean by fixed presentation? A. The bucket is rigidly held on a stick in a manner such that it cannot swing freely to one side or the other, or cannot swing vertically up and down as is the case with a scoop connected with drag lines on the scoop, of the Mahoney patent, that is, freely pivoted to rotate about the pivots which connect the stick to the scoop.

Q. In other words, in your opinion that means a rigid connection of the scoop? A. The term itself does not mean rigid connection. Rigid connection is necessary in order to obtain fixed presentation. Fixed presentation deals with the manner in which the cutting edges are applied to the material being penetrated.

Q. I wish you would refer to Claim 4 of the Leroy Clutter Patent No. 1,317,431, and point out anything in that claim that calls for fixed presentation or rigid connection of the scoop to the stick?

Mr. Richey: Objection to that. He was not asked anything about the claims. It is not his function to interpret claims.

Mr. Corbett: He has talked about fixed presentation. He can read.

The Court: There is nothing in Claim 4 anyway.

Mr. Corbett: All right, Your Honor. That suits me. That is all, Your Honor.

Mr. Richey: That is all.

The Court: You want to offer all of your exhibits. I understood they were all in. You are not objecting to any of the exhibits?

Mr. Corbett: We have not had a chance to go over them, Your Honor.

The Court: They are all admitted, subject to any objection you may have.

Mr. Corbett: Has Mr. Richey closed?

Mr. Richey: We are through. Mr. Downie is to go back on about that other matter.

Mr. Corbett: There are a few points raised here by Mr. Downie for the first time, and by Mr. Sessions, that we would like to rebut briefly.

The Court: Make it very brief. Put on your witness. Limit it strictly to surrebuttal.

Mr. Corbett: We would like to go ahead with them in the morning.

The Court: Put one witness on. I want to get through with this case. I am more interested in the arguments in this case than anything else.

DEFENDANT'S SURREBUTTAL TESTIMONY.

WALTER FERRIS, a witness recalled by Defendants, further testified as follows:

DIRECT EXAMINATION by Mr. Corbett.

Q. You were present during the testimony of Mr. Downie and Mr. Sessions, and heard their testimony regarding the latch structure and structures of the Morrison bucket and the Bucyrus device. Will you briefly comment on any points raised by them, not previously raised?

The Court: That is about as objectionable as the question you objected to that Mr. Richey asked.

Mr. Richey: I object to it. I think it is too general.

The Court: Have you not got any specific things in mind, Mr. Corbett?

Mr. Corbett: Yes, I have a few things; but there are some other things I have not had a chance to talk to this witness about since the notes were made.

Q. I will ask you another question. Did you hear the testimony Mr. Sessions gave, and Mr. Downie also, regarding the wear upon the bolts marked in pencil A on Chart 43, showing the Thew structure? A. I did.

Q. Will you briefly state whether or not their testimony on that point is correct, or any reason why—

Mr. Richey: He fully discussed that in his direct.

Mr. Corbett: I don't think he did.

Mr. Richey: One of your experts did.

Mr. Corbett: I don't think so.

The Court: Let him answer. It will save time. Answer the question.

A. I think their testimony is in error on this particular point.

The Court: That bolt is not in shear?

A. This bolt is not in shear; but it was stated that this bolt would wear and permit—modify the stress on

these two tension bolts so as to put them in shear. This through bolt marked A has a longer engagement with the end casting of the dipper stick than the distance between the other two bolts, and it requires a very excessive amount of wear in this to put any shear strain on the others.

The Court: You do not agree with them as to the character or the extent of the wear?

A. No, sir, I do not.

Q. I hand you Plaintiff's Exhibit No. P-71, and ask you to comment upon the claims made by Mr. Downie and Mr. Sessions with regard to the springing of the bucket and the inoperativeness of the latch in such structure?

The Court: The main contention was it would put the latch out of commission or alignment?

Mr. Corbett: The claim was it would strike on here and the weight on the back of it would press it in.

The Court: What have you to say about that, Mr. Ferris?

A. I would like to distinguish between the term rigid as included in the patent presentation or rigid attachment of the dipper stick and the rigidity or flexibility of the structure itself, in regard to whether it is strong enough to stand the stresses which come upon it. Mr. Downie and Mr. Sessions have discussed this dipper in a way which seems to me to be saying, in effect it will bend if it is not made rigid or strong enough; and that is perfectly true.

The Court: Your contention is to simply make it stronger.

A. Simply make it stronger and make the design right. The patent refers to a rigidly attached dipper stick, it seems to me, in an entirely different sense; whether the dipper has any provision for motion with regard to its attachment to the stick. Every bucket and every mechanism does reflect under the stresses that come upon it. If it is not strong enough, make it stronger.

Q. If the engineer designs it stronger, it may be made stronger?

The Court: You mean it should be like the one-hoss shay?

Witness: Like the one-hoss shay: whether it should fall to pieces all at once or fall to pieces at all.

Q. You were present at the demonstration of the Osgood machine at the Sam Davis Coal Yard? A. Yes, sir.

Q. The one shown by these movies today? A. I was.

Mr. Richey: That was part of his main case. You put that on yourself as your main case.

The Court: Let us see what the question is.

Q. You noticed the breaking of the cable during the final operation of that machine? A. I did.

Q. Will you tell briefly how that occurred? A. After the first measurement of heights of the bucket was made, Mr. Downie asked that the boom be lifted higher and higher, to show the interference of the bridle bars with the lengthwise channel on the face of the dipper stick. Before it got to this final height, the hoisting rope interfered with the cross bracing on the front of the dipper stick and dragged so hard on that, it apparently loosened its attachment to the hoisting drum.

The Court: Nobody has made any point of that.

Q. Was or was not this stick in dumping position when that breakage occurred?

Mr. Richey: There you are again. This is surrebuttal. This is something the first time in the case.

The Court: I don't know that anybody made any point of that.

Mr. Corbett: The point is that there is an attempt to show there would be a co-action between these stops.

Mr. Richey: That is your interpretation. My objection to the question is that here is something brand new in the case. This is surrebuttal. That is highly improper.

The Court: Finish your answer.

Witness: The shovel at that time of that interference was shown in a position for which it was not designed. At no time did the hoisting rope interfere with the operation of the machine.

Cross Examination by Mr. Richey.

Q. Where were you standing when that rope broke? A. I can't say.

Q. You were not operating the machine? A. I was not.

Q. You do not know just when it did break? A. No, sir.

Q. The first thing you saw the rope was hanging there loose? A. Yes, sir; but I saw the rope interfering with the A-frame before it broke, and called Mr. Corbett's attention to the interference, and tried to have the operation stopped.

Mr. Richey: That is all.

Mr. Corbett: That is all. We are not prepared with this other witness. I would rather not put him on. I do not want to put him on tonight.

The Court: All right. Put Mr. Downie on.

REX R. DOWNIE, a witness being recalled by the Plaintiff, further testified as follows:

DIRECT EXAMINATION by Mr. Richey.

Q. You saw that rope after it was broken there at the demonstration? A. Yes, sir.

Q. Which one of the lines broke? A. That was the hauling line which broke, not the hoisting line.

Q. What caused the breaking? A. Evidently the anchorage of the cable gave out. I did not examine the casting or the anchorage to see whether there was any defect; but it was the hauling line that let go, and not the hoisting line.

Q. Where did it let go? A. Right near the end of the rope.

Q. Near the drum? A. Near the drum which is carried at the base of the boom on the Osgood machine.

Q. In other words, if the rope had been long enough to wind around the drum again, it would not have broken, would it? A. That is correct.

Mr. Richey: That is all.

Mr. Corbett: That is all.

The Court: You have one more witness.

Mr. Corbett: Yes. We may not call him.

(Night adjournment.)

(Trial resumed May 13, 1931, 9:30 A. M.)

Mr. Williams: As I understand the situation, Your Honor, there is a question of whether the defendant would put on another witness with respect to the patent phase of this case, and had decided it will not do so. That leaves it open only, then, as to this question of suppression, as I understand it, and plaintiff has Mr. Downie and I think Mr. Siggers and possibly some one else.

The Court: That is the next issue, then. The patent part of the case is closed?

Mr. Richey: Yes.

Mr. Williams: Now, we are faced with this situation, Your Honor. Yesterday we had anticipated that the case would run on during the day before closing, and had made arrangements to have Mr. Fay here, who was the leading counsel for the Byers Company in the Cleveland case, with reference to claims made by the plaintiff that the Byers Company had full information with respect to this Bernard Clutter development, and thought it not of sufficient value to press it. Last night when we found how close we were getting down, we phoned to Mr. Fay and tried to get him here this morning, but he had other arrangements and couldn't be here until three o'clock this afternoon, coming on the 2:45 train which would bring him in the court room about 3:00, and we wanted to have his testimony with respect to his knowledge of this Bernard Clutter situation at or before the Cleveland case was tried.

The Court: Well, we can take care of that, Mr. Williams; we can start the arguments, and when Mr. Fay gets here, stop. How much time do you men want for these arguments? I am inclined to give you nearly everything you want on the arguments.

Mr. Williams: It may run into tomorrow, possibly the night.

The Court: Oh, yes, I should think so.

Mr. Richey: Why, I don't know, Your Honor, how much time it will take. In view of what Mr. Williams says, I have no doubt, if we use what is left from today, and part of tomorrow, we will have plenty of time. I presume, from what Your Honor said about your eyes, that you would like to have us argue the thing rather fully.

The Court: Yes.

Mr. Richey: Save you all the reading that we can, and in that case I think we both want to read a good deal of law, which will take quite a good deal of time. But I don't know—I think an hour and a half to a side ought to be enough.

Mr. Corbett: Your Honor, could you leave that a little elastic?

The Court: Yes, surely.

Mr. Corbett: We certainly can finish by tomorrow night, I believe, unless this testimony of Mr. Downie's is

more prolonged than we expect. Of course, we don't know what he will testify, but we will put it through as rapidly as we can.

Mr. Richey: On this suppression business, too, I think—when I say an hour and a half, I mean the patent end of it, and by the way, I think of course in this suppression we cannot keep out some things relating to patents, because that testimony of Mr. Downie will to a certain extent relate to this Joplin use. We will keep the sheep from the goats as far as we can, but can't altogether separate it.

The Court: Now, I think in the opening, Mr. Corbett has the burden of proof on the first three patents. I think in the opening you might discuss the fourth and fifth patents, and the ones that were not in the Cleveland suit, and then let him answer you on all of the patents, giving you his views on the first three, and then you can answer anything you want to.

Mr. Richey: All right, sir.

The Court: Just so that you know how to proceed. I would like to hear from you first about the third and fourth Downie patents; that is, the fourth and fifth in this suit, and then hear from Mr. Corbett as to why in his judgment the decision of the Court of Appeals should not be followed as to the first three patents in this suit, and let you answer that, and anything else you want to.

Mr. Corbett: That is satisfactory to me.

The Court: All right. Now, the only other testimony in this record about this suppression is the testimony of one witness, isn't it?

Mr. Richey: Mr. Downie and Mr. Siggers, two witnesses, and possibly Mr. Fay.

Mr. Corbett: You mean the testimony of it of record?

The Court: Yes.

Mr. Corbett: Well, there is the testimony of Bernard Clutter and the testimony of Ransom.

The Court: I am talking outside of the depositions now.

Mr. Corbett: I think Hazen is the only one that has testified in open court.

Mr. Williams: Well, some time during the proceeding we shall want to read into the record some excerpts from the brief of the Keystone Company in the Circuit Court of Appeals, but that will be very brief. These are the only witnesses that I know of, Mr. Downie and Mr. Hazen and Mr. Fay.

The Court: All right.

Mr. Richey: What are those sections you want to read in?

Mr. Williams: I can't tell you just where it is, but it is with reference to claims in statements of the brief, in general, that no one had ever used this rigidly attached scoop on an instroke ditcher.

Mr. Corbett: That no one ever conceived—the statement contained in the brief in a couple of places is that no one ever conceived the idea of using a drop bottom bucket on an instroke ditcher, no mechanic—that is the substance of it.

Mr. Richey: Can you give me the page number?

The Court: Well, that is in this patent suit?

Mr. Williams: No, that is in the brief in the Circuit Court of Appeals in the Cleveland case.

The Court: You are offering that on the suppression issue?

Mr. Williams: Yes, on the suppression.

Rex R. Downie, a witness recalled by plaintiffs for further examination, testified as follows:

Direct Examination by Mr. May.

I began work on Downie Patent No. 1, in the summer of 1920. I had taken up with Mr. Siggers the advisability of applying for a patent. That was Mr. E. G. Siggers of Washington, D. C., our company's patent attorney. I remember when I took this matter up with Mr. Siggers, the development of the drop bottom ditcher was reported to him in December, 1920, and at that time he was advised that we would desire to apply for patent, and would presently supply him the data for the preparation of the application. I supplied him the data for this application in February, 1921. When I took this matter up with Mr. Siggers I had no knowledge or information concerning any device or construction used at Joplin, Missouri. Knowledge of the Joplin device came to my knowledge in January, 1921, from Mr. Lyle Hazen. The information I received from Mr. Hazen was that on a job of Mr. Herbert Wallower, a contractor and a user of one or more Keystone excavators, Mr. Bern Clutter, the operator, and Mr. Hazen, our superintendent at Joplin, and Mr. Wallower, had between the three of them, or among the three of them, contrived a drop bottom scoop, which was a special scoop made after the general pattern of a

skimmer and mounted upon a Clutter ditcher, and that it had been used to some extent in digging a cellar at Carthage, and that they were using it for loading wagons, that they couldn't keep the bottom closed as to its operation—

Mr. Corbett: That is hearsay, as to whether or not they could keep the bottom closed.

The Court: Well, he is testifying now as to what he heard.

Mr. Corbett: Yes, but he is touching on the patent situation as to whether or not they could keep it closed.

Mr. May: Well, he is charged with suppressing certain facts, and it may be material what facts he had in his mind and he knew of.

The Court: Well, this amounts to a fraud issue.

Mr. Corbett: If he wanted to prove that they couldn't keep the bottom closed, he should have brought that man Hazen here to show it.

The Court: Well, he is not testifying that that is the fact. He is testifying to what he heard, that is all. It would not be considered on the other issue at all.

Mr. May: That is all. It is not asked for that purpose at all, or offered.

(Narrative continued.) He said that there was difficulty in releasing the latch of the scoop; that the latch was changed several times. Mr. Hazen was not definite as to what the latch changes or construction consisted of. He said that to close the scoop Mr. Clutter lowered the scoop to the ground and rested it upon the bottom; that in one form of the latch releasing structure the tag man, or latch man, stood out either on the brow of the bank beyond the bucket or down in the pit, and released the scoop. That is in summary the points that I remember of Hazen's information. His information was that this device had been used two or three years previously to the date he was talking to me. That would place it then, in 1918 or 1919, and, as I say, at Carthage, Missouri. As to what was done with these changed skimmer scoops at the conclusion of this job, he said they were taken off and used as skimmers, and that the use of machines as ditchers was discontinued. The information that was obtained from Mr. Hazen or the summary of this information, principally what the machine had consisted of, as I understood it from Mr. Hazen, and the fact that it had been used for some digging and loading of wagons, the method of closure and the fact of variations having been

made in the latch construction, I believe I reported. I think that is all of the matter that I reported to Mr. Siggers. This information was communicated to Mr. Siggers before I applied for a patent, and by way of informing Mr. Siggers, so that he could rightly advise me whether to apply for patent, and so that he might draw the patent accordingly. Mr. Siggers advised me concerning this matter in legal parlance that it was an abandoned experiment, and that we should proceed with applications for a patent. I so proceeded and executed the application as he drew it and presented it.

The Court: Now, what was the date of this contract?

Mr. May: Which contract?

The Court: What was the date of the contract with Bern Clutter?

Mr. May: April 11, 1925, perhaps not the 11th, but in April, 1925.

The Court: April, 1925, was the date of the contract?

Mr. May: But there has been a charge here that there was fraud right from the inception.

The Court: Well, I am just trying to correlate these dates. Will you let me have that exhibit, the agreement?

Mr. Williams: That is Exhibit No. 19.

Mr. May: No, it is 114.

Mr. Mahoney: Well, that is a copy of it. It is in twice.

Mr. May: The same thing is in each, however. The words are exactly alike in each.

Mr. Williams: One is a carbon copy of the other.

The Court: All right, proceed, Mr. May.

(Narrative continued.) This application was granted and the patent issued in 1925, No. 1,511,114, under date of October 7, 1924. The date I referred to above as 1925 should have been 1924. After this patent was granted we found that it was being infringed by the Byers Machine Company. First of all, we took up with Mr. E. G. Siggers the matter of the infringement and the question of proceeding against the infringers; the principal question was not really as to whether there was infringement but as to the matter of getting under way with suits.

Mr. Siggers advised us to investigate the condition of our own patent. He reviewed a number of patents, and desired us to investigate, among others, the matter

of the Joplin experiment, and principally for the purpose of recording the facts of it against a possible misunderstanding, subsequent misunderstanding, of those facts.

Q. Had you in the meantime, that is, between the time of your conference with Hazen and this period that you consulted with Mr. Siggers, learned that some of the information given to you by Hazen was not accurate? A. Yes, sir. In the period from early 1921 to 1924, about mid-year, I had learned that this work occurred, not at Carthage, but at Joplin, and not in 1918, but in the winter of 1919 and 1920, and I advised Mr. Siggers of that, either as I learned it, or in the latter part of 1924.

Q. Did you pursuant to Mr. Siggers' suggestion undertake to ascertain more definitely what had happened at Joplin? A. Yes, sir. I investigated about Mr. Wallower and Mr. Clutter, and, as I say, had talked more or less currently with our employees who came to Beaver Falls from the Joplin plant at sales conferences and such occasions, and including Mr. Hazen and Mr. Oliver, and there may have been others.

Q. Did you or did you not have any of these witnesses put their recollection into written form? A. Yes, sir. I asked Mr. Clutter and Mr. Wallower as being the principals in that work at Joplin to record the machine they had used and the results of their work.

The Court: How long was that before this agreement?

The Witness: You refer to the agreement of 1925, Your Honor?

The Court: Yes; Exhibit 98.

The Witness: About the same time. Mr. Wallower's affidavit was given to me shortly after Mr. Clutter's. I interviewed Mr. Clutter personally in the matter, and had another employee interview Mr. Wallower, who was then located in the West.

Mr. May: Mr. Williams suggests that we exhibit a photostatic copy to the witness, as the exhibit cannot now be found.

Q. I show you Exhibit 113, I believe, of the defendant. Will you state whether or not that is the written statement obtained from Mr. Clutter, to which you referred in your answer just previous? A. Yes, sir, that is the affidavit made by Mr. Clutter at the date there shown.

Q. And what is the date there shown? A. April 16, 1925.

Q. Do you recall, Mr. Downie, when with reference to this date, April 16, 1925, the statement or affidavit of Mr. Wallower is dated? A. Mr. Wallower's statement was a little later than Mr. Clutter's.

Q. Did you refresh your memory from his statement? A. I have here Mr. Wallower's affidavit, and its date is May 8, 1925.

Mr. Williams: May I see it, if you please?

Mr. May: Yes, let Mr. Williams see it.

(Paper handed to Mr. Williams.)

Q. I show you a paper marked "Exhibit P-73" and ask you what that is? A. This is the statement by Mr. Wallower dated May 8, 1925, his statement in regard to the Joplin work.

Mr. May: If the court please, we offer Exhibit P-73 in evidence.

The Court: Any objection?

Mr. Williams: To the introduction, no, no objection.

The Court: It may be admitted.

Q. Will you briefly state to the court the contents of that affidavit, without reading it in full, and consuming that amount of time?

Mr. Corbett: What is that—the substance of it? It is a short affidavit.

Q. Well, read the affidavit.

The Court: I will read it.

(Exhibit handed to court.)

(Narrative continued.) After obtaining the information through these affidavits I furnished this information immediately or in due course after that to Mr. E. G. Siggers, since that had been the purpose for which we had obtained the information. This information was submitted to him by giving him the affidavits themselves, that is the two affidavits of B. R. Clutter and H. H. Wallower. Later on I had further conferences with E. G. Siggers on the question of infringement, that is in 1925, I had, I believe, at least two conferences with E. G. Siggers. One or two of them were before the obtaining of the affidavits, and one or two afterwards. Mr. Siggers' conclusion after this information was submitted to

him was confirmatory of his earlier advice, that the Joplin work was an abandoned experiment, and that our position was therefore sound, and that we should proceed with litigation. We then proceeded upon the advice of Mr. Siggers, Senior, who was somewhat advanced in years, to go to Mr. Janney, of the firm of Emory, Booth, Janney and Varney, of Chicago. By we I mean the Keystone Driller Company. We carried with us all the information that we had accumulated up to that time. That is, Mr. Siggers' information and views as to the prior art, the patent, the field machines as distinct from patent machines, and including this Joplin machine, and submitted all of the same to Mr. Janney. That was some time in the summer of 1925.

These affidavits were in the material that was submitted to Mr. Janney. I had at least two conferences with Mr. Janney in Chicago, possibly three. Mr. Janney took up the investigation of the paper art, and considered the reports as to the field art, and prepared toward entering suit against the Byers Company. However, we did not—as I think we filed the bill against the Byers Company while Mr. Janney was still in charge of the case. However, it leads up to the time of our changing counsel in the Byers suit. His conclusion—and you referred to that—on the Joplin business was that that was an abandoned experiment; he confirmed Mr. Siggers' opinion in regard to it and our course and general plan was not changed.

There was a discussion in Mr. Janney's office as to whether these facts, as we had gathered them, about this Joplin incident were such that they should be brought to the attention of the court, and at the first conference with Mr. Janney about what we had then gathered about the Mahoney machine or anything else should be presented as a matter by the Plaintiff. This was questioned and discussed. My attitude as expressed to Mr. Janney at that time was that I would be governed by counsel in the matter. In behalf of the company I desired of Mr. Janney that we should follow whatever practice was the conservative and best legal practice in the matter. At this time there was a change of counsel.

Mr. E. G. Siggers died—I am not certain as to the date—but in the course of the preparation of this case and the investigation of it, and I should have said earlier, Mr. Philip Siggers, son of E. G. Siggers, was in the employ of the firm of Emory, Booth, Janney & Varney.

And upon the decease of Mr. Siggers, Sr., Mr. P. E. Siggers, or Philip Siggers, withdrew from that firm and took up his father's practice at Washington. And since our case had come into the Janney office by way of the Siggers' office, we retained Mr. Siggers as our counsel in charge, and Mr. Janney being pressed with other work, we concluded to arrange for further senior counsel in the case. Mr. Janney had worked with Mr. Richey, of Richey & Watts, in Cleveland, on earlier cases, and told us of Mr. Richey, and Mr. Siggers and I went to Cleveland and arranged with Mr. Richey to take charge of the case as senior counsel.

I do not recall exactly when this took place, but I would place it early in 1927 or late in 1926. Between the date of the conference with Mr. Janney and the time of taking the case and putting it into Mr. Richey's hands we did not gather any more information, relative to this Joplin incident, of an essential character; it was mostly confirmatory of what we had heard, except that I did learn this from Mr. Oliver—I learned some additional facts as to the discharging of the scoop and the method of discharge from Mr. Oliver, either in 1925 or 1926.

You state that you are calling my attention to the matter with Lyle Hazen at our plant. Well, as part of the investigation of what went on out there, we asked Mr.—— one of our employees to try to find one of these old scoops, special buckets that had been installed by Mr. Wallower, and an old scoop was secured out West and sent in to the plant, and we asked Mr. Lyle Hazen, on one of his trips to the shop, to recondition and reconstruct the scoop or fragments of scoops—I believe there was only the shell of this special scoop came in, possibly with the skimmer trappings, and to set it up so we could see whether there was anything in it that we could use—anything that would be of advantage commercially. That was at the Beaver Falls plant, and that was, not before our first conference with Mr. Janney, but I believe was before, however, our first conference with Mr. Richey.

The scoop reconditioned in the way that Mr. Hazen had built it from his recollection at the time did not differ in any particular from the description of the scoop as had been gathered through these affidavits. The general construction, that is as to it having been mounted on a Clutter ditcher, was the same. Mr. Hazen fixed up a latch in the construction which was in part to follow in general the Joplin construction, or one of the Joplin

forms and also to improve it in any way that he could for the purpose of our improvement of our design. The one that I speak of was sent in by Mr. Ransom, who was commissioned to attend to the matter, as being one of the special scoops used there at Joplin. I do not have any definite knowledge of my own as to whether it was or not. Mr. Hazen in his deposition here said that he never again saw either of those special scoops used at Joplin, after their use at Joplin, and he attended in our shop at Beaver Falls to a reconstruction here, and it is to be inferred that he now believes that that was not one of those special scoops.

Now, when we took this matter up anew with Mr. Richey and his firm we laid before Mr. Richey everything we had touching the whole matter at his earliest convenience, which was shortly after his taking up the case. Among this matter were these two affidavits. In fact, I should say, before it was—before Mr. Richey took up the case, all of the material was before him. He had not read all of the old patent art on it, of course.

Mr. Richey's opinion was confirmatory of Mr. Siggers', Sr., Mr. Janney, and Mr. Siggers, Jr., that the Joplin work was an abandoned experiment, and that it did not anticipate—or their construction there, to the best of our knowledge, did not anticipate the construction of the patent in any case, and that we should proceed.

Mr. Richey: I think it would clear matters up a little bit to call attention to the fact that the bill of complaint in the Byers case was filed January 31, 1926. Our firm were local solicitors; we had nothing to do with the burden of the case. Later, as Mr. Downie says, we were called in to take the burden of the case.

The Court: You say that was filed January 31, 1926?

Mr. May: That is the Byers case they are talking about.

The Court: Is that right, Mr. Richey?

Mr. Richey: Well, wait a minute—I beg your pardon. It was the 22nd day of December, 1926, that the bill was filed.

The Court: 22nd day of December, 1926?

Mr. Richey: Yes, sir. The bill in this case was filed about March, 1929, I think. I don't know the exact date. It was after Judge Jones' decision. That was handed down, Your Honor, about the 1st of February, 1929.

Mr. Williams: February 9, 1929, the bill was filed in this case.

The Court: What is it?

Mr. Williams: February 9, 1929, the bill in this case was filed—in the Osgood case.

In our conferences and in planning for the taking of testimony in the Byers case there was a discussion as to whether the material gathered with reference to this Joplin case was of such nature that the plaintiff should offer it to the court as part of its case, and the question originally discussed with Mr. Janney was again raised. Our attitude as the client and principal in the matter was the same, and we so advised Mr. Richey.

Q. Mr. Downie, coming to the meeting with Bernard R. Clutter leading up to the affidavit and the agreement which is in the case as Exhibits 113 and 98—

The Court: 98 is the agreement.

Q. —how did you arrange to meet Mr. Clutter? A. I don't know that I arranged to meet him. I went to visit him—I may have telephoned, or Mr. Elmire may have telephoned for me. I got Mr. Elmire of our New York office to take me to Mr. Clutter's place.

Q. And where did Mr. Elmire take you to find Mr. Clutter? A. Well, it was either to his job or to his residence—I do not remember exactly. He lives at Lakewood, New Jersey, or did then, and it was in New Jersey.

Q. Did you meet B. R. Clutter at one time, or more than one, in connection with the obtaining of this affidavit? A. I met Mr. Clutter two or three times in the matter of the affidavit here.

Q. Now, will you tell the court, without me asking too many questions, just what happened in those several conferences; what was said and done between you and him and what happened? A. Following Mr. Siggers, Sr.'s opinion and instance that we should investigate the Joplin work, I visited Mr. Clutter, I think at Lakewood on the first occasion, either in the latter part of 1924 or early in 1925, and asked him about the work he had done at Joplin, and he told me of the construction there, and I also desired at the same time, as a measure toward solidifying our position, to acquire whatever there might be in the way of rights growing out of the Joplin experiment or use, whichever it might prove to be, and desiring an affidavit also as to the facts, and being acquainted with Mr. Clutter's characteristics, for he is of the type which is known as somewhat shifty, which also I had

advised Mr. Siggers, and which had prompted his advising that we secure an affidavit—I offered to Mr. Clutter, or he needed money and stated plainly that he would require money if an affidavit and his story were to be reduced to writing, that if he would agree to convey any rights he had in or arising from the Joplin work, and would execute an affidavit presenting his then understanding and recollection of the Joplin work, reasons for discontinuing it or not following it further, that I would, in behalf of the company, convey to him a one-fourth interest in a machine that he was then proposing to purchase, and that as to his rights, for I understood at that time that he had an application in the Patent Office presumably on some detail or element of the scoop he had used at Joplin—and whether I arrived at that because of his referring to his contrivance as his patent, as you know workmen some times do, or whether he simply planted the idea that he had an application in my mind, I do not know, but in any case I had that belief, and I did not want to pay anything for that unless it could be of use to us, and I felt that there was a possibility that Mr. Clutter might have some detail or construction, and even though it was only a patent construction, might be of use in combination with our other patents. So I concluded that it would be advisable to wrap it in with our general patent property and case. And so made the offer to Mr. Clutter that in the event we were successful in retaining or recovering our own business in the ditcher, whether by reason exclusively of patents that we then had, or whether by reason of any patent right that we might acquire from him, that we would pay him an additional, or credit him an additional one-fourth interest in the machine he was about to buy, thus making the second half contingent upon our own satisfactory progress toward the recovery of our ditcher business. As the memorandum, I believe, shows, I placed a time limit on that by way of definiteness, and to prevent its continuing too great a length of time. Of course, at that time I thought that the matter would be concluded amply or easily within two years' time, and I think I placed a limit of two years on this contingent payment, and reduced all of this to the form of a memorandum, intending to execute it with Mr. Clutter, after one of my visits; and in the interim, I had another conference—that would be early in 1925—with Mr. Siggers, or at least communicated with him, whether by phone or conference, and then

returned to see Mr. Clutter, some time along in April, 1925. I found that Mr. Clutter at this time—for I asked him pointedly—and because convinced that he had no patent application in the office, and nothing which in my further talk about the matter with Mr. Siggers could be regarded as of value to our case. However, since I had made the deal thus and so with Mr. Clutter, one of the elements being that he convey whatever he had to us, knowing that I was buying an uncertain quantity in a sense, or at least not on full information as one element, and was compensating Mr. Clutter for reducing his story to writing and fixing it for us against his own future misrecollection or change of belief, whether interested or disinterested, I told him I would go forward as I had arranged in the previous conference, and that we would pay him according to the memorandum if we succeeded in our plan of re-establishing our own trade, since he had signed the affidavit and that was part of the deal as a whole. I had not distinguished in compensation between the signing of the affidavit as compensation for one quarter, and the conveyance of right as the compensation or consideration for the other quarter interest; the two were wrapped together; it was all one transaction. Now, the legal case was not settled; the delays carried the matter far beyond the two-year period set up in the memorandum. Mr. Clutter was impecunious and hard pressed for cash, and we had some friendly—

Q. Just before you go into those negotiations—at the time that this affidavit was signed, and the agreement not signed, do you have a recollection as to what was done with the copies of the agreement that you have with you? A. The copies of the agreement?

Q. The memorandum, or agreement, as you call it? A. I do not know that I recall of my own recollection that Mr. Elmire had one copy of this—had Mr. Clutter's copy. I heard Mr. Elmire state that he did, and Mr. Clutter said that he had no copy. Refreshed from that, I can remember it, but I don't think I would remember it myself.

Q. Now, you can proceed and tell what transpired between you and Mr. Clutter following the signing of this affidavit. Was or was not a contract of sale entered into for the machine which you mentioned he was proposing to buy? A. Yes, sir. The machine referred to here when I say a quarter interest and another quarter interest, was one bought by Mr. Clutter on deferred payment plan early in 1925.

Q. Just one minute. I want you to identify this Exhibit 96. I show you Exhibit 96, and ask you to state whether or not that is the contract for the purchase of the excavator? A. Yes, this is the contract on the first of the two 425 Clutter machines bought in that year, shop No. 4918.

Q. You speak of two machines. Which one was it to which you referred in your recent testimony? A. I have been referring all along to the first of the two machines bought by Mr. Clutter in that year.

Q. The second was a later transaction? A. Later transaction.

Q. Than this incident of the affidavit and memo? A. Yes. It followed this and had nothing to do with it, and is not involved in any way with it.

Q. And in connection with the contract were other papers executed by Mr. Clutter? I show you Exhibit No. 101 and ask you what that is? A. This is evidently the security on the machine sold to Mr. Clutter. I do not find the identification that would show that it was this first machine rather than the second. Possibly it is here. They were about the same price, and I don't carry the prices in mind. Just a minute—this is the chattel mortgage or security on the machine to which I have referred, Shop No. 4918.

The Court: That is the first machine?

The Witness: That is the first machine.

Q. That is commonly called a chattel mortgage? A. Chattel mortgage on the machine, yes, sir.

Q. And were there any other papers signed accompanying that mortgage? A. I do not know that there was. Oh, yes,—there were the notes securing the payment, which are listed here in the mortgage.

Q. How many of those? A. Eighteen promissory notes, one for $515.00, and seventeen for $425.00 each.

Q. Now, Mr. Downie, proceed and tell what transpired between you and Mr. Clutter following those interviews, referring to this machine and referring to the interview itself? A. As I say, Mr. Clutter needed money badly, and pressed his need of it to me as representing the company, and pressed as a claim his rights under the agreement I had made with him. We were friendly with Mr. Clutter; I had worked with him in the field, helped him when he was demonstrating, I fired the boiler for him and pulled the tag line, and he taught me to operate it, and he was of a genial and affable and friendly type,

such that it was difficult to hear of his need of funds without doing the best we could for him, and I pointed out that we didn't owe him anything, even though he needed money, because the—it is along about the time that the two-year term mentioned in the memorandum expired—but in the hope that something would happen in our case so that we could reasonably and properly make a payment to Mr. Clutter, I extended the time for him. However, in the meantime a complication arose, and it was not contemplated at that time of making the agreement, and which led to difficulty with Mr. Clutter. He began to fall down badly in his payments, and on one or two occasions he sent us bad checks.

Q. What payments do you refer to? A. Payments on this machine.

Q. According to the mortgage? A. Not that mortgage, but on a machine bought a little later in the year. We had furnished him two machines, worth seven or eight thousand dollars apiece, and he was working them pretty steadily, and was not paying us as fast as he was taking value out of the machines, and we had to look at the case in the course of regular business as to whether or not the Clutter account would have to be braced up, and told Mr. Clutter this, that he was falling down so badly that even though he, having been an earlier demonstrator of ours, and was in some sense, if not a protege, at least a friendly customer, that we might have to take his machine back; even though, as I say, a one-fourth interest had been credited to him, the value had fallen still further so that that quarter interest with what money he had paid still did not make our equity safe in the machine.

Q. Do you recall how many of the notes he had paid? A. I do not recall. I think two or three, but it would only be a guess.

Q. Do you know what that sheet is? A. Yes, sir, this is evidently a sheet from our notes receivable ledger on the account of B. R. Clutter.

Q. Can you tell from that what notes had been paid? A. Yes, I believe I could state from that what Mr. Clutter's credits were.

Mr. Williams: I have never seen this.

Mr. May: Yes, you did. It was in the bunch of papers left with the clerk.

Mr. Williams: It is quite evident that this witness cannot identify these matters, but I am willing to let it go in.

The Court: All right.

Q. From that, can you tell how many of the seventeen notes Mr. Clutter paid, and when they were paid? A. There were three paid. One June 26, 1925, one March 19, 1926, and one April 22, 1926.

Q. Can you tell from that when the credit of the one-fourth was made? A. Yes, sir. Here is a credit that would be the first quarter credit to Clutter December 21, 1926, $1700.

The Court: Did you credit the first of this quarter —did that cover the first payment on the machine or later payments?

The Witness: That was intended to cover the first quarter.

Q. Spoken of in that memo? A. Yes, sir.

Q. First quarter allowance spoken of in that memo. A. Now, it was delayed, due to Mr. Smith, our credit man and treasurer, mislaying my memorandum in regard to the matter, and that accounts for the fact that it was not until December, 1926, even though I had arranged it in April, 1925, that that credit was made to Clutter.

The Court: You mean you had made a credit memorandum to Clutter when you got back from Lakewood, N. J.?

The Witness: Yes, sir, immediately, and thought that it had been issued, and that Mr. Clutter's account would be thus reduced by that quarter. Mr. Smith later found my handwritten and initialed memorandum of that, but had neglected to properly credit it to Mr. Clutter's account.

The Court: That credit was made in December, 1926; is that right?

The Witness: It was entered on the books December, 1926.

Mr. Williams: It was entered as at the close of the year, December 31, 1926.

The Court: December 31, in what amount?

Mr. Williams: $1700.

Q. Is that transaction, or rather that incident, the memo agreement, the matter referred to in the deposition of F. W. Ransom? Do you recall the deposition? A. I don't recall the deposition.

(Recess.)

Q. I will read you from Mr. Ransom's deposition. Question 19. (Reads.) "Do you remember at any time

Mr. Clutter questioning or disputing the amounts which you claimed were due on these machines for any reason?" That question was objected to by Mr. Edgerton. "A. Mr. Clutter never questioned our account except that he claimed he had a credit due him which he did not have on our books, and repeatedly stated that Rex Downie knew about this credit that should be given him on his account. Q20. Did he explain to you in any way the nature of the credit that was due him? A. He did not. Q21. He just kept telling you to ask Rex Downie about it? A. Yes. Q22. Did you subsequently take up with Mr. Rex Downie the matter of these credits claimed by Bernard R. Clutter on the two excavators you understand he had purchased from the Keystone Driller Company about which you have been testifying? A. Yes. Q23. Will you kindly relate where and when you took the matter up with Mr. Rex Downie, and state as nearly as you can just exactly what took place? A. In the early part of December of 1920 I had occasion to go to Beaver Falls in connection with an agency to be established in Cuba for the account of sales of Keystone excavators, and at the same time to go over with the treasurer, Mr. Smith, a number of accounts in New York territory, among these the account of Bernard R. Clutter. I stated to Mr. Smith Clutter's reason for withholding payments on his account, and asked him if he knew anything about the credit claimed by Clutter, stating that Clutter always claimed that Rex Downie could clear up the matter. We then called in Mr. Rex Downie on this account. Mr. Downie seemed surprised that no credit had been allowed, and said that he had given Mr. Smith a memorandum on the matter. Mr. Smith then found a memorandum which called for a credit, I believe, of $1,000, and said that he had not made the credit on the books because he understood the credit was not to be made until a suit then pending was decided. Mr. Downie said, no, that one-half of the credit, I believe $500.00, was to be made immediately, and the balance was to be allowed in case of a favorable decision on this case. It was then decided that the credit was to be made for the one-half of the amount, that I was to so notify Clutter, and insist on payments of his account. I am not sure how this credit was entered on the books, but believe it was through my original entry, credit memorandum back through the New York office. This would be early in December, 1926. Q24. Did Mr. Smith or Mr. Downie explain to you at that time

just why Clutter was being given this credit? A. No, sir. Q25. Can you state what suit it was that was pending that this credit referred to? A. Neither Mr. Downie nor Mr. Smith mentioned the name of the suit, but as the only important suit the Keystone Driller Company had pending at the time was the one against the Byers Shovel people at Ravenna, Ohio, for infringement, I presume that was intended."

The Court: Who is testifying there?

Mr. May: F. W. Ransom.

The Court: Who is he?

Mr. May: He was at one time secretary and treasurer of the Keystone Driller Co., and at this time I believe he was in the employ of the Star Driller Co.

The Witness: No, in our New York office as collector and export manager.

Mr. May: I mean at the time the deposition was taken.

Mr. Williams: No, the deposition shows he was not employed then.

Q. Now, Mr. Downie, is the credit memorandum, or rather the credit to which you referred a few minutes ago, the same credit as referred to by Mr. Ransom in his deposition? A. Yes, sir, that refers to the same incident, except the amounts are wrong, as Mr. Ransom remembers them.

Q. Now, Mr. Downie, going back to the transaction between yourself and Mr. Bernard R. Clutter, will you proceed to relate what took place regarding the arrearages on this machine and the agreement or memorandum of which you have been talking? A. The credit was duly issued, as shown by the ledger there, but still Mr. Clutter's account on the first machine was in arrears, and at a visit some time in the forepart of 1927, I told Mr. Clutter that he would have to make the payments or we would have to take his machine back, and I had made this visit along with an inspection trip down the New Jersey coast, looking at other machines, and, among other things, had some difficulty in the swing mechanism of one of the Clutter machines, and after attending to that, told him about his credit condition with us, that he was endangering it. And later on we had to do just that thing. Of course, I believe I gave Clutter a month or two months, something like that—I don't remember the exact length of time—in which to repair his account with us, and he did not do so, and I wrote or told, I am not sure

whether it was on a trip or by writing, the New York office to proceed to repossess Clutter's machine. Clutter remonstrated against this, on both the personal ground of friendship and on a pretended, as I am very sure, misunderstanding of the transaction I had made with him in the early part of 1926. There began to be apparent in Mr. Clutter's attitude the idea that it would be to our interest to repossess his machines. There was more than a little of threat finally apparent when our New York office advised him that they had been ordered unequivocally to proceed, and it could amount to nothing more nor less in my own layman's understanding of the term of blackmail, even though Mr. Clutter was friendly; it was just that he seemed to believe that by my transaction with him in 1925 I was making some effort to enlist his good graces, and that the deferred payment was for that purpose, to keep him hushed. Now, I told him in 1927 that for all of me or of us he could put anything and everything he knew in as many newspapers as he liked; that his notions were unfounded, and that we meant business, that we were repossessing his machine unless he cleared his account up and were proceeding to take his one machine, and hoped in his behalf that he would pull out on his subcontract work that he was doing for a man, I believe, by the name of Straub or Staub, or some such; but he didn't pull out or amend, and I happened to have learned of a couple or three White trucks that Bern had bought back along in 1925; he was arranging his licenses there for his new White trucks at the same notary's office, and getting his license at the same place that he executed the affidavit that I had presented him as to his story about Joplin work, and I noticed that he still had his White truck, and knowing something of the way truck companies required payment, I was suspicious that Clutter was holding out on us and keeping his truck. I don't know that I definitely and pointedly called Mr. Clutter's attention to it but—

The Court: What do you mean by that—holding out on what, the White truck?

The Witness: I mean that I felt that Clutter was probably making his payments on his trucks.

The Court: Rather than to you?

The Witness: Rather than to us, and that our machine was the center of his contracting business, and therefore that he ought not to do that. He ought to equitably retire his equipment. However, I mention that

merely as one of the things that I had in mind that rather convinced me that Clutter was over-reaching, or over-relying on the idea that he had us in fear in some degree of his knowledge in regard to the Joplin work. This merely sharpened our determination to repossess his machine, and we repossessed then the second one, but nevertheless told Mr. Clutter that we would fulfill the agreement I had made with him if and when, as anything fell due to him, purely and simply as a matter of keeping our word. And even after his machines were repossessed, Mr. Clutter needed money badly, and the letters—I believe they are here in evidence—show the pressure and the insistence—you can in a way call it friendly, and in a way you can call it unfriendly—for cash, and Mr. Clutter did not seem either able to understand or to make reasonable and ordinary accounting of the one time extension that I had made him more or less simply from our friendly interest in him, and so I offered him, in lieu of his contingent rights under my original deal, and made a substituted transaction, that is, at the time of taking back the machines, I had said, well, now, since your contingent credit cannot now be applied against merchandise, and would have to be remitted in cash by us in the event of its falling due, I propose that in order to preserve some interest in the thing to you we substitute one-half of the amount that would otherwise have been due, originally, I believe, $1900, or some such, down to one-fourth of the merchandise credit, although a number of scoops had been rejected by Clutter, so that it don't really amount to quite that. Hence the actual $1700 credit issued. Mr. Clutter was agreeable to that, and I had on the strength of that then extended the time, I think, a year perhaps, or year and a half, and that time elapsed, or was three-fourths elapsed, and Mr. Clutter still extremely insistent that he needed some money. Well, to be shut of it, and to clear the case up, I told Bern that if he wanted to just liquidate the claim under my original deal with him for the purchase of whatever he might have in the Patent Office rights, that I would do it, and we would simply remit to him one-half of what we were to have remitted in cash in the event of his claim being realizable and discounting the possibilities of it. In other words, we would discount the possibilities of the suit as one chance in two, and that we would call it then one-half, or $900.00. I believe it is, which would be $450.00 or $425.00, something like that, and that if he had to have

cash at once, that would be all right with us, and we enclosed our check, and if he wanted to substitute that and be shut of the whole business, finally accept the check; if he didn't, please return the check. He cashed the check, and on that the matter was closed. Then some time later Clutter wrote back again—

The Court: Do you remember the date of the check?

The Witness: I do not. It is here, however, in evidence somewhere.

Mr. Mahoney: Exhibit 108. The date of it is February 16, 1928.

The Witness: What is the amount, please?

Mr. Mahoney: $476.00.

The Witness: That is the check to which I have just referred.

Mr. Mahoney: This passed through the Clearing House in Cleveland on February 21, 1919—I don't know whether Your Honor wants that or not.

Mr. May: It went through the usual course, and probably was cashed some time later.

The Witness: (Continuing.) We knew then Mr. Clutter did not, and I feel just would not, understand the course that the thing had taken. He referred to our deal, and that we had been shortchanging him, and cutting his payments in two too often. He was greatly abused over the matter, and there was nothing to do under the circumstances but simply point out the facts, as I knew them, and that is what I did by letter, and I think those letters are here in the case, that there had been a time set during which he could have a right, that that time had elapsed without his right materializing, and in the hope even that something might materialize for him, I had extended it and finally discounting it, paying in cash, to be done with it. That summarizes the transaction with Mr. Clutter.

Q. Look at Exhibits 104 to 107, both inclusive, 109, 38—

The Court: 138.

Mr. May: No, just 38—

Q. —110, 39, 111 and 40, and state whether or not those are the letters back and forth between you and Clutter, to which you referred in your testimony just recited? A. Yes, sir, these are from the correspondence, and are letters covering this matter I have spoken of.

Q. Look at the letter of December 4, 1928, which is Defendants' Exhibit 39 and see if from that you can re-

fresh your recollection as to the final extension date of that agreement of which you are talking? A. The letter of December 4?

Q. Yes, No. 39, December 4, 1928?

Mr. Williams: What is the question?

Mr. May: If he can fix the final extension date of that agreement.

Question read.

A. Yes, sir. The letter extends or refers to the time having been extended to the end of 1928,—the effect of the original transaction; and "but in the offer to so extend the time we also required the substitution of $952 as the amount of the contingent credit, instead of the original $1904, representing the second or contingent quarter of the price of the machine."

Looking at the bills receivable sheet of the Bernard R. Clutter account, can you tell how this account was closed out, as referring to this first machine, the one referred to in the memo of April 11, 1925?

Q. There is a credit of $4,250, closing the account August 11, 1927.

Q. Now I show you another sheet and ask you what that is?

Mr. Williams: That is at the time the first machine was repossessed?

Witness: That is when the closing credit was made in the bills receivable ledger. I cannot say from that, though, whether that is the date of repossession.

Mr. May: I think he can, probably, from this.

Q. What is that sheet? A. A journal sheet for the month of August, 1927, from our general books.

Mr. May: We hereby offer in evidence Bills Receivable Account of B. R. Clutter as Plaintiff's Exhibit P-74, and Journal Sheet of August, 1927 as Plaintiff's Exhibit P-75.

Q. The journal sheet, Plaintiff's Exhibit 75, handed you; what does that entry signify? A. This is an entry marked to close out the note account of Bernard R. Clutter, covering one Model 425, Shp. No. 4918, excavator, by re-sale of same to Harry Gotham. It shows the amount of $4,250 as a credit to bills receivable and a debit to merchandise sales.

Q. Is that item of $4,250, under date of August, 1927, credited to the B. R. Clutter bills receivable ac-

count, Exhibit No. P-74? A. This is the same credit as identified on the journal sheet, that is, as being the Clutter machine, and here the credit is on the Clutter note account.

Q. Mr. Downie, I will read you from the deposition of Bernard R. Clutter, taken at Lakewood, New Jersey, the 21st day of October, 1930:

Q42. "Relate as nearly as you can what took place when you and Mr. Downie went out into the yard of your home at Lakewood on this occasion?"

Answer: "Mr. Downie informed me that he wanted to talk over some business privately and that he didn't want any one to know anything about it except he and I. I asked him what the nature of the business was and he said it was regarding that drop bottom ditcher scoop that I had had made out at Joplin, Missouri. He explained that they—meaning the Keystone Company—I presume, or possibly, he, Rex Downie, had a patent,—I should have said taken out a patent on a drop bottom ditcher scoop, and that I apparently had made or had had made the first one at Joplin, Missouri, and that I could cooperate with them in the protection of this patent. I told Rex that if I had had the first one made and put into use, that it was my invention and not theirs, and that I could not see where they had any right to the patent. I don't remember all that was said, however after considerable jarring over the proposition, Rex informed me that I did not have money to go into court and fight the Keystone Driller Company, which was a fact. However, he said if there had been a wrong done, let's get together and see if we can right the wrong. I asked him in what way that could be accomplished. He said that he had a proposition to make me if I would be willing to consider it, and I asked him what it was. He said that they would sell me a new machine at half price, as this was the only opportunity that I felt that I had to realize off of my invention. I agreed to accept it. I asked Rex if we should go into the house and draw up a contract to that effect, and he said, 'No, not now.' He said, 'Now that is the ticklish part of the thing.' That it was a question as to whether or not there could be anything drawn up in writing that would be of any advantage. He also said that any papers to show that there was a deal existing be-

tween us might serve to invalidate the patent. He said that he would find out if there was any way that they could hold me and see me later. He also told me that I would have to sign settlement in full for the machine, and that they would later issue me a credit for the half interest, and that I would have to trust entirely to his honesty to carry out their part of the deal. He asked me not to say anything to Elmire or any one else as to what his business was down in Lakewood."

Is that true or not?

A. That is not a correct relation of the incident. There was an interview; but the secrecy put upon the matter here by Mr. Clutter is not correct. The inability to write anything as to our transaction is not in accordance with the facts. I don't remember all the material that is in that statement of Mr. Clutter's.

Q. Now I read you question No. 43:

"In your answer to the above question, you testified that Downie said that you could cooperate with them in the protection of this patent. Did he explain to you what you were to do in this respect?

Answer: Yes, sir."

Question 44:

"How were you to cooperate with him in the protection of the patent?

Answer: By keeping absolutely quiet in regards to my part of the invention."

Is that correct?

A. That is not correct. Mr. Clutter was to convey any rights he had to us; and we were willing, as I have said previously, to wrap the utility of whatever rights he had in with the utility, if any, of our own; and to recompense him in accordance with the degree, or contingent upon our own success in the business.

Q. Now I read Question 48 of the deposition:

"In this conversation you have just testified to with Mr. Rex Downie, did he explain or mention to you how he was going to protect the patent, or what the occasion was for asking you to cooperate with him in the protection of this patent?

Answer: He said that they had either started or were going to start a suit or suits on company or companies that were infringing."

Question 49:

"In your answer to Question 44 you said that you were to keep absolutely quiet in regard to your part of the invention. What part did that refer to?

Answer: The scoop that I had made at Joplin, Missouri."

Is that correct or not?

A. Well, there is a good bit comprehended there. There was no pledge of secrecy asked or given by Clutter as to his work at Joplin. It is true we did discuss the work he had done at Joplin to some extent. I was still interested in his construction, or in his story about it; in fact investigated it; but the colour put upon it there is not correct.

Q. To help you a little bit in separating it, that part referring either to the bringing of a suit or the intention of bringing suit; did or did not you disclose that to him? A. I may have, or may not. I am not able to say.

Q. Then coming to Question 49 and the answer, as to the fact that he was to keep quiet about the scoop he made at Joplin? A. Yes, sir.

Q. Is that true? A. No, sir, there was no understanding that he was to keep quiet about what he had done at Joplin. In fact the object was to get into the court definitely and to guard against his mis-recollection just what he had done at Joplin; and I think I advised Mr. Clutter that I was securing his affidavit for that reason and because the attorneys said that it was advisable to do so in matters of where earlier experiments had been carried along on a line similar to that in question. How much of this precisely I told Clutter, I don't know; but I will not say I did not advise him frankly as to my purpose.

Q. I read again from Mr. Clutter's deposition, Question 68:

"Do you recall the nature of these papers that were brought to you on Mr. Downie's second visit to Lakewood?

Answer: Not except that when they started to write the papers up Rex said that they were going to try to tie me hand and foot if such a thing was possible."

Did you say such a thing or not?

A. I do not recognize the expression nor the spirit indicated there. If Mr. Clutter means simply that I

wanted him to execute the affidavit as to his own story as to what he did at Joplin, then that is correct.

Q. The next question:

"Did you have an opportunity to read these papers?

Answer: Not to my recollection."

What do you know about that?

A. Clutter read the papers and was given ample leisure. Mr. Elmire saw him read them and I saw him read them in the notary's office there in that little town that Elmire mentioned, and where Mr. Clutter was arranging for his licenses for his White trucks.

Q. Question 70:

"Were you furnished a copy of any of the papers that they required you to sign on this occasion?

Answer: I was not."

Question 71:

"Did you request a copy?

Answer: Yes, I did."

Question 72:

"What did Mr. Downie say?

Answer: He said that they couldn't have any copies out, and that it was a question as to whether they could ever use the papers they had or not."

What is your statement as to that?

A. Again, that is drawn or pulled in the direction of secrecy here in regard to the transaction. I don't know whether a copy of Mr. Clutter's affidavit was retained by him. I did not make any record of it. But there was no objection to his having a copy. In fact, I would suppose from the nature of the case that he had a copy.

Q. Did you or did you not say that he could not have—"they"—referring to the company—could not have any copies out? A. No, sir, I made no such statement as that.

Q. Did you or did you not refuse to give Clutter copies upon his request? A. I did not make any refusal.

Q. Coming to Question 104, which relates to a purported meeting between you and Mr. Bernard R. Clutter on a road—"we"—referring to Mr. Clutter—was constructing near Roseland, New Jersey. The question is:

"Will you relate as nearly as you can the conversation you had with Mr. Rex Downie on his occasion near Roseland, New Jersey?

Answer: Rex informed me that they would have to take the machine back unless I could raise the money immediately, or a portion of it."

Is that right or is that not right?

A. Yes, sir, I told Mr. Clutter on one of those occasions we would take his machine unless he made some payments.

Q. And the following sentence is the answer:

"I informed him that if he took the machine away from me that it meant that I would lose anything that I might realize from the patent on the drop bottom ditcher scoop, and that if he did take the machine away that it was not going to do him any good."

A. I remember there came into Mr. Clutter's manner along about this time an indication that he felt that the fact of our transaction of 1925 gave him a means of pressure upon us in the matter of our proposed repossessing of the machines or our threatened repossessing of the machine. Yes, it may have been, so far as I know, in those words.

Q. Referring further to the answer:

"He said—referring to you—he did not want me to feel that way about it, and I informed him that those were the facts and he could take it or leave it, and that eventually I could pay him every cent that I owed the company for that machine."

Did Mr. Clutter make that statement?

A. I indicated to Bern. we did not want him to feel that just because we had title to the machines, we were desirous of putting him out of business. But as to our fear of his relating to the Byers Company, or any other, what he had done at Joplin, I said, as I said previously, he could put that in the newspapers if he wanted to; that it was neither here nor there as to what I was talking about, the payment of his account; but we did not want to just for the fact of his previous employment with us, whether it was a sufficient reason or not, as a reason for desiring to deal leniently with Clutter; we did not want to unnecessarily take away his livelihood. I probably intimated the fact. I am sure that I told Clutter this.

Q. I call your attention to Question 150, which reads:

"Defendant's Exhibit No. 40 makes reference to the fact that you signed an affidavit. Was this one of the papers that Mr. Downie brought down to Lakewood for you to sign so as to tie you hand and foot as he expressed it?

Answer: Evidently it was."

Question 151:

"When did you first discover that one of the papers you signed at Lakewood on that occasion was an affidavit?

Answer: When Mr. Downie was leaving he said 'There was an affidavit in these papers that you signed.'"

What is your recollection?

A. That is not correct. I told Bern. with Elmire there. Bern. read over the statement. I told him what it was; and, as I say, I think I probably told him the purpose of it was to record the facts as to his Joplin work; and I made no remark to the effect that there had been an affidavit among the papers he signed, upon leaving; and as being the first intimation to him to the effect.

Q. The next question, 153:

"The first you knew, then, that there was an affidavit in the papers was when he went out the door and made that statement that you have just referred to. Is that correct?

Answer: That is my recollection."

Does that accord with your recollection?

A. No, sir, that does not.

Q. Question—I guess it is a cross-question—cross-question 171:

"You don't remember of having subscribed to the affidavit before a notary. Is that right?

Answer: There was a man with Rex Downie at this time; as to whether or not he was a notary, I do not remember."

Cross-question 172:

"Did he or did he not administer an oath when you signed the papers?

Answer: Not to my recollection."

What is your recollection as to that?

A. Bern. is confused as to that. The man with me was Mr. Elmire. Mr. Elmire was always with me. I was never there with anyone else than Mr. Elmire.

Q. Where was this affidavit executed? A. At this notary's office in a little town there where Bern. was arranging for his licenses, I think, Tom's River.

Q. Did he or did he not administer the oath, the notary? A. The notary administered the notary's oath in due form after Clutter sat there and read the paper that I had prepared from the data obtained from a previous interview.

Q. I call your attention to cross-question 178, in which Mr. Clutter was asked:

> "Why didn't you apply for a patent on the device you experimented with in Joplin?
>
> Answer: Because I was informed by Mr. Oliver at that time, manager of the Joplin branch, of the Keystone Driller Co. that Rex Downie had gotten up a drop bottom ditcher scoop and was taking out or had taken out a patent, and that that office was not aware of that fact."

That is correct or not?

A. Well, as to what Mr. Oliver may have told Mr. Clutter, or what Mr. Clutter learned there at Joplin, I of course cannot say; but I know that there was—there would be no reason for Mr. Oliver to have told Mr. Clutter, in January, 1920, that I had made a drop bottom ditcher at Beaver Falls and had taken out a patent, because it had not occurred yet; so there must be some misrecollection there on Mr. Clutter's part.

Q. Mr. Downie, at any time later than the obtaining of these affidavits, I believe it was probably later than the filing of the bill in this case, were you approached by anybody representing that they were associated with or representing B. R. Clutter in regard to this Joplin incident?

Mr. Williams: I think, Your Honor, that is going rather far afield. I have not objected at all to any evidence, direct or indirect or hearsay, that this witness had or acquired. I have not even objected to his giving his reasons for what he said he did. But what is the purpose of now going into the question of whether he was approached by anybody after this suit was filed with reference to this matter?

Mr. May: The purpose is to discredit B. R. Clutter in this transaction so far as his testimony and his deposition are concerned.

The Court: It would be relevant for the purpose of showing Clutter's attitude before the time he gave his deposition. He may answer. Did anybody approach you with reference to the Bernard Clutter matter after the Byers suit filed in Cleveland, or any time before that?

A. Yes, sir, after the Byers suit was on, we were approached at Beaver Falls by Mr. George Wagner and Mr. Bird C. Clutter, a brother of Bern. Clutter's.

The Court: Who was Mr. Wagner?

A. Mr. George E. Wagner, a former employee of ours, and then an employee of the Star Drilling Company, and also a joint licensor of the Star Drilling Company.

The Court: How was he related to Bernard Clutter?

A. Bird C. Clutter is a brother of Bernard Clutter. Wagner is not related to Bern. Clutter.

The Court: Was he acquainted with him?

A. Yes, sir, very well acquainted.

Q. Is Bird C. Clutter also associated with Wagner in business? A. Yes, sir, they are both in the employ of the Star Company, and are licensors of the Star Ditcher. Their object was to—

Mr. Williams: Just a minute.

The Court: What did they say?

Mr. Williams: Tell what they said.

The Witness: All right.

Q. What did they say to you? A. I will have to say that the substance is of what they said. I did not make any copy of their precise words; but I am perfectly aware of the substance and the purpose on the trip. It was—

Mr. Williams: Just a minute. Let us have what was said. No assumptions or purposes.

Q. Just confine yourself to what they said; what proposition they put to you, as near as you can recall.

The Court: Or who did the talking as closely as you recall.

The Witness: Well, Mr. Wagner, mainly, spoke for them; and the closest approximation I could make to Mr. Wagner's language would be this: We came down

here to see you boys about this ditcher situation. We think your patent underlies ours and we would like to have a license. We understand that Bern. Clutter knows some information that could be used against you. Do you think that a license permitting the Star Company to continue, without having to make any further arrangements with the Keystone Company, could be effected? The interview of course occupied much more time than I have required here.

The Court: That was the substance of the conversation?

A. That was the precise substance, and those were the two elements of it; that is, that they desired a license, and they knew Bern. Clutter had information, and that the two things could be used for their purpose and our purpose.

The Court: All right. Anything further, Mr. May?

Q. Did these men make more than one trip or not? I have forgotten. A. Yes, sir, there were two trips.

Q. Do you know or not whether there was a letter sent by your company to each, Mr. B. C. Clutter and Mr. George E. Wagner? A. There were.

Mr. May: They are already in evidence.

Mr. Williams: Oh, I see. All right.

Q. I show you Exhibits P-45 and P-46 and ask you if those are the letters? A. Yes, sir, these are the letters written by us to Mr. Wagner and Mr. Bird Clutter in regard to this matter. These letters are dated April 12, 1929.

Q. Which exhibit is which letter? A. The letter to Clutter is P-46, and that to Wagner is P-45.

Q. What is Exhibit 112? A. It is a letter by Mr. Wagner addressed to Mr. J. V. Downie, of our company, dated April 20, 1929, in response to ours of April 12.

Mr. Richey: Judge Jones' decision in the Byers case was handed down January 23, 1929.

Mr. May: Not for the record. I have a statement of Mr. Williams here relating to correspondence from the banks and with Clutter, trying to get him to pay these notes. It is a mass of stuff. If they will admit it, it need not go in. (Statement of Mr. Williams read to the court by Mr. May.)

The Court: That has no bearing on Mr. Williams' point.

Mr. May: Except that if there were any secret about it, we would not have been making such an effort trying to collect these notes.

The Court: That is a matter of argument. Mr. Downie has testified and Mr. Bern. Clutter testified that they tried to collect the notes. There is no use loading up the record with that.

Mr. May: All right.

(Noon adjournment.)

(Afternoon session, Tuesday, May 12, 1931.)

(Narrative continued.) The matter of the advisability of the presentation of the facts that had been ascertained about the Joplin device was brought up in a conference I believe in the early part of 1929 at Beaver Falls between a number of our firm and counsel. At this conference there were in attendance Mr. Siggers, Mr. Richey, Mr. May, Mr. Vail Downey, my brother, and Mr. R. F. Patterson.

The Court: Was that after the Cleveland case was tried? A. Yes, sir, that would be after the Cleveland case.

(Narrative continued.) At the time of this conference Mr. Vail Downey was president of the company. This conference was occasioned by this approach of Mr. Wagner and Mr. Bird Clutter in the matter which I stated this morning, the matter of license for this Clutter, licensors of the Star Company.

The Court: Those letters were written in—

Mr. May: April, 1929.

The Court: Yes, was it after that?

A. Before that. That was at the time the letters were written.

(Narrative continued.) At this conference it was the advice of counsel, and this advice was followed, that these letters introduced this morning be written to Mr. Wagner and Mr. B. C. Clutter.

B. R. Clutter's full name is Bernard Ross Clutter. I have not seen his signature I believe.

Mr. May: You may cross examine.

Cross Examination by Mr. Williams.

(Narrative continued.) On Defendant's Exhibit 98 the writing in pencil at the top of the first page reading

as follows: "Dated April 11, 1925," is in my handwriting. I do not know when it was put there. I do not believe I could say except that it must have been subsequently to the writing or typing of the memorandum; otherwise it would have been typed.

The Court: Let me see it, Mr. Williams.

(Document shown court.)

The Court: The affidavit is dated the 16th.

Mr. Williams: Yes.

The Court: And this bears date 5 days earlier.

Mr. Williams: I think so.

Q. On the second page, in the margin, at the left hand side, I see pencil notes there: "Inc. to April 11, 1927"; and then below that the word "Copy"; and below that the words in pencil "of the machine"—perhaps you can read what that is. Is that your handwriting? A. These marginal notes on the second page are all in my hand. The first is i.e.—id est—to April 11, 1927; and that connects the last paragraph there, which is bracketed, by a line. The meaning, as I recall this, is that the "one-quarter of the price of the machine and the equipment named in the second paragraph shall be suspended only until two years after date hereof"—and that is to April 11th, 1927.

Q. Oh, yes. A. This copy here, I happen to remember, was a notation to the stenographer to copy this paragraph in some correspondence or other with Clutter, and I believe it will be found verbatim in that correspondence. Down here at the end of the final paragraph there is the notation in parenthesis "of the machine"; and again in parenthesis "understood"; and then in the third parenthesis "noted, December 3rd, 1928."

Q. That was some memorandum made there with reference to some correspondence you were having at the time with Clutter? A. Those are notes, I suppose, nearer this date, December, 1928. They may have been this correspondence, I said, where I copied that paragraph.

Q. On the face of the letter from Clutter to you of January 9, 1928, marked in this case as Defendant's Exhibit No. 104, on the first page I see some words underlined, and across them, diagonally across the lines of writing, the words in pencil "See over." Is that your handwriting? A. That is my hand.

Q. You made the underscoring on that? A. I assume I did.

Q. At the top left in the pencil are these words "1904—two ciphers—contingent final pt. offer 500 instead of larger contingent payment." And that last sentence is stricken out. Did you write those words on there? A. Those notations are in my hand.

Q. And they were also made in view of some correspondence you were having at the time with Clutter, were they not? A. Undoubtedly.

Q. And on the back of the first page some matter in writing there. I will ask you if you can read that? A. That is in my hand.

Q. Please read it. A. This may refer to understandings that if KD should repossess both machines, and hence could not fulfil par. 2 of contract by a machine-credit, they would reduce the amount par. 2 by one-half and pay (if and when due) in cash. At least this was writer's intention and recollection of agreement (verbal) in regard to the point. R. D. December 3, 1928.

Q. R. D., that is your initials? A. My initials.

Mr. May: What was the date of the letter and the number of the Exhibit?

Mr. Williams: The letter itself is dated January 9, 1928. The memorandum date on the back of page 1 was December 3rd, 1928.

Q. At the upper right hand corner of the first page of the letter of November 28, 1928, from Clutter to you, Defendant's Exhibit No. 110, there appears some writing in pencil. Did you write that there? A. These notations are in my hand.

Q. Will you please read what those notations are? A. There are five lines in the notation. The first one is "Review facts chronologically." New line: "Copy in par. 4." New line: "State first quarter satisfied." Fourth line: "Cite offer half cash in lieu of or in satisfac of second quarter,—accept by accept of ck." Fifth line; "Leaving 476? remaining contingent upon lit"—presumably an abbreviation for litigation.

Q. When did you first become employed by the Keystone Driller Co., Mr. Downie? A. About 1912 or 1911; I ran drilling machines for a summer or two.

Q. What was your position with the company in 1919? A. I came with the company for permanent and continuous employment in about November of 1919 or

December, and my job was demonstrating, and a trouble man on field machines.

Q. Did you have anything to do at that time with the patents or inventions of the company? A. No, sir, nothing in the way of managing the same. I had some ideas.

(Narrative continued.) In 1920 my duties with the company were, continuing as I have said, and interspersed with some developments of scoops, beginning early in 1920, I made a six roll skimmer. As to whether I did this work by myself I will say for the drafting work I frequently had assistance although my assembling and drawings I did myself. Mr. Wagner was in charge of the engineering department. I was merely employed in the designing end, employed in writing instruction books and answering trouble letters about the machines, and so forth.

Mr. May: Give Mr. Wagner's name?

A. Mr. George E. Wagner.

(Narrative continued.) I don't remember exactly when Mr. Wagner left the employ of the company, but I would place it along in the middle of 1921. As to who took his place as the head of the development or invention department I would say that my Father was always the managing engineer and continued to be so even after Mr. Wagner's leaving our employ, although I assisted him, and I presume I would be regarded as his chief assistant in more or less direct management under his instructions from the engineering department. In fact, my Father was the head of it in the sense even when Mr. Wagner was there, except that he was not experienced as an engineer, whereas Mr. Wagner was. In the year 1925 I was secretary and general manager and more or less directly managed the engineering with the company. In fact I was the managerial head of the engineering or development department at that time. That was also true in 1928 and is still true.

Q. Now when I spoke of your being head of the development or invention department, I meant to include that you had charge of the solicitation, or, rather, determining what patents should be taken out or what inventions should be covered by patents? A. What was the date again?

Q. In 1921, after Mr. Wagner left. A. No, sir, I did not have the election in that matter at that time.

Q. Your father had the final determination? A. My father.

Q. Most, if not all, matters of that character first came to you for your attention, did they not? A. No, sir, not if they originated with anyone but myself. If it were one of my own ideas, I worked it up and presented it to him.

Q. In 1921, how many men were there engaged in the patent or developing department,—whatever you called it? A. We called it the engineering department, and I think it would be correct to say there would be four, about four individuals, including myself as part time member of the department; two of those being draftsmen.

Q. You say in 1921 you were not an experienced engineer; but previous to that you had made one or two inventions, had you not? A. Yes, sir, in 1920. But I meant engineering in the sense as distinct from invention.

Q. What distinction do you make between the two, engineering and invention? A. Of course the two lines of activity tend to lap to some extent; but I meant technically qualified to determine the strengths of materials and other features entering into machine design. I was acquiring some practical knowledge of that matter, of machine design, but I was not in charge of the determination of those things.

Q. Throughout your experience with this company what function did the engineering department have other than the developing by its own members of any inventions? Did it get ideas from others in the force, or men in the field, or men in the shops? A. Oh, we have ideas presented by operators and by customers and from individuals in the force, both within the engineering department and by salesmen. We have no fixed lines within which we will listen to an idea, or from outside of which we will not listen to an idea. We just gather them where we can.

Q. It was general practice, was it not, throughout this time that any ideas of any employees or any information with respect to improvements or inventions in machines would be referred to the engineering department? A. They would come to the attention of either R. M. Downie, in those earlier years, or to me, as a member of the engineering department, if they related to excavators. I was not at that time however directly in charge of drill design, nor pump design.

Q. I am speaking particularly of excavators. It was the practice that any such ideas or information would immediately come up to the engineering department? A. That would be a logical channel of presentation to the company.

Q. How many times did you see Bern. Clutter in the spring of 1925 when you were discussing this matter of the affidavit and the contract? A. I think that I probably saw Bern. Clutter, to carry your question back a month or two, perhaps once in the final months of 1924, and then once in the early months of 1925, preceding the date of this affidavit.

Q. And each time you went to see him at his home or work? A. Yes, sir, I remember it was somewhere in New Jersey that I saw him on each occasion.

Q. And it was on the second occasion in the spring of 1925 that he signed the affidavits that you presented to him, was it not? A. Yes, sir, that would be either the second or third; third, if there were three; second, if there were two.

Q. Why was it that this memorandum of contract that bears the pencil date of April 11, 1925; why was not that signed? A. Because at the time of the execution of the affidavit, I learned by direct questioning of Clutter, and after having informed myself further from counsel as to the worth of what Clutter had; that is to say, Clutter then advised me point blank that he did not really have an application in the patent office; and I had learned from counsel in the meantime that if he had not yet applied, he had no right to apply, because the work had occurred too far before; and therefore there was no object, from my view, in having Clutter execute the agreement.

Q. Did Clutter see the agreement? Did you show it to him? A. Yes, sir, I gave Clutter a copy or two of it; I don't know exactly.

Q. Mr. Elmire says there were only two copies made. Do you say there were more than two copies made? A. I don't know that there were more than two; I know that Clutter read the agreement, and we had it there among us.

Q. Did Clutter object to signing it? A. No, sir.

Q. Did you ask him to sign it? A. No, sir.

Q. Did he ask you whether he should sign it? A. I don't know that he did.

Q. Will you say that he did not? A. Do I say that he did not?

Q. Ask you to have the contract executed by you and himself or by the company and himself? A. I don't know that it was a point with him any more than with us, that it should be signed or not signed. As I said, there was nothing that Clutter was to do that he had not already done theretofore in respect to his rights there at Joplin, if he had any; and therefore there was no reason, from our viewpoint, why he should sign it, so it was a mere matter of going ahead on our part. In other words, there was no further consideration from Clutter coming to us; it was all a matter of what we might owe Clutter on account of my original deal.

Q. You say Clutter had already done what he was to do; what was that? A. Execute the affidavit.

Q. Clutter had not received what he was to receive for doing that, had he? A. No, sir, he was to receive this quarter credit.

Q. He was to receive two quarters credit? A. No, one quarter.

Q. One quarter direct and one quarter contingent? A. One outright and one contingent.

Q. The affidavit made no reference to that credit, either actual or contingent, did it? A. I do not recall that it does. I do not believe the matter of the credit had to do with the facts as to what Bern. carried on at Joplin. This was a means of satisfying Bern.'s feeling there he ought to have something, whether out of the Joplin experiment or what. Anyway he had satisfied the requirement that he should reduce his story to writing for counsel.

Q. He was interested in getting something for it? A. Yes, sir.

Q. You were willing to give him something? A. I was willing to give him a quarter credit on the machine.

Q. And another quarter contingent? A. Another quarter contingent.

Q. Why was not the agreement that showed his right to get something for having signed the affidavit, having been reduced to writing; why was it not signed? A. Because, as I have said, Mr. Clutter considered his affidavit and executed it, and I had learned that he had no application on any detailed or general scoop construction; and that, if he did not have an application, then he was barred from filing an application; therefore, there was nothing more that Clutter could do.

Q. There is nothing in that memorandum of contract that recites that Clutter did have anything, is there? A. That he did have anything?

Q. Is there any recital there that he had anything to convey; or does he agree or warrant that he had anything to convey? A. No, sir. There would be no warranty here that he had something to convey. It says "all rights, title or interest that he may now have or may later acquire, as inventor or co-inventor, in that certain pivoted bottomed ditcher scoop contrived by himself, or by him and Herbert Wallower."

Q. Anything he may have now or may get in the future; so there is no warranty there that he had anything? A. No, sir, I would not say that is a warranty there on the part of Clutter.

Q. Then I take it that Clutter was content with your verbal assurance that you would pay him for making that affidavit, and did not require that this contract be signed so that he should have some written evidence of your obligation to him? A. I presume that the issuance of the credit, one quarter credit on the machine was relied upon by Clutter. I can say he must have relied upon our issuing that credit.

Q. He also relied upon your statement that you would give him a contingent credit for an additional quarter, did he not? A. Yes, sir, I believe so.

Q. You must have had considerable influence with Clutter, having already prepared a contract and shown it to him, that he would not insist upon your signing it, and taking your word? A. I of course did not know at the time I prepared this that it would not be signed. I prepared it to be executed in the ordinary course.

Q. It would have been necessary for you to ask him to execute it? A. If I found he had anything to convey under the deal I had made with him, I would have required him to execute it.

Q. Then, on that statement, the entire $4,000 was paid simply for his execution of that affidavit, is that true? A. No, sir.

Q. What else was there then? A. It was consideration for his having promised that he would convey whatever he had, if anything, and I thought he had an application in the patent office.

Q. But at the time you closed the deal with him you say you knew he had no application? A. That is carrying forward the deal I had made previously with him.

Q. Then, when you finally completed the deal, and were still to pay him $4,000, the only thing you were to get was his signature to that affidavit; that is true; that is all you were to get? A. That is all Clutter actually did.

Q. That is all he agreed to do? A. No, sir.

Q. What else did he agree to do? A. He would make over to the Keystone Company his patent.

Q. But you knew by that time he had no patent? A. No, sir, I did not, not at the time I made the agreement with him.

Q. The final time you went to see him, when you had this paper with you and showed it to him, at that time you knew he had no patent? A. Yes, sir. I see you are speaking of the time of the signing of the affidavit as being the time of the transaction.

Q. Is that not true? A. It is not the time.

Q. Then you saw him at least three times, if not four times, in 1925, did you not? A. It could not have been four times; whether it was two or three times I am not certain. But the agreement with Clutter was made at an earlier time than the time at which the affidavit was executed; and that is what I have governed myself by in the discharge of the deal.

Q. You made a verbal agreement with him the first time you and Mr. Elmire went down? A. I made an agreement with Clutter, it would be either the first, or second if there were three occasions; what I am inclined to think is that it would be on about the second occasion.

Q. According to the date of the affidavit made there on April 16, when the affidavit was signed, that would be one time? A. That would be a clear date.

Q. And this contract bears date of April 11; that would be another time? A. If that date is correct. I cannot say that April 11 is the date when I left.

Q. But at some time shortly before the date the affidavit was executed, you went down and had with you this memorandum agreement? A. That might have been the same date on which the affidavit was executed, for all that I can remember.

Q. If that is your judgment, then,—is it your judgment, then, that the date you showed him this memorandum contract was the date upon which the affidavit was executed, is that right? A. I know that the two were handled somewhat together, definitely together. I am unable to say, however, that it is the same date or that

it might have been the date I have noted in pencil or at some subsequent time. What my reason was for noting on there April 11, I do not now know.

Q. Put it this way: At any rate on the day the affidavit was executed by Clutter and given to you, you knew he had no patent or application for patent? A. That is correct.

Q. And that, for signing that affidavit, he was to get a present credit of one quarter of the value of the excavator he was going to buy, and get another quarter contingent credit, depending upon how your litigation turned out? A. Not for signing the affidavit.

Q. What did he get it for? A. In consideration of his earlier promise that if he had any rights, or came to have any, out of that Joplin ditcher, as inventor or coinventor, he would make such rights over to the Keystone Company.

Q. He was also to sign an affidavit? A. He was also to sign an affidavit.

Q. And at the time the affidavit was signed and the deal closed, you knew he had no patent or application for patent? A. That is correct.

Q. What I am now going to ask you, and at the danger or risk of tiresomeness, I will ask you, again, what present or future consideration did Clutter give for this $4,000 credit and contingent credit other than the signing of the affidavit? A. Nothing materialized from that except the signing of that affidavit; but there is a definite distinction, and I have practiced that definite distinction, in accordance with it, between that as a conveyance from Clutter to us, and what I have said was a conveyance, first, and the promise of the signing of the affidavit or the reduction of his story to writing.

Q. Is this a fair statement about the patent business? When you finally closed the deal you were still to give him a $4,000 credit, and a contingent credit, although you then knew he had nothing to give except the signing of the affidavit; is that a fair way of putting it? A. That is; except in the one respect, that you say, when we finally closed the deal. This deal was a deal between the Keystone Company and Bernard Clutter. When I said we would give him thus and so for thus and so.

Q. You give him $4,000 in credit for some patent rights and for an affidavit? A. That is right.

Q. How did you get the idea that he had any patent rights? A. From himself.

Q. He told you? A. I understood it definitely from him, Clutter is, as I say, somewhat evasive at times; and my best belief was that Clutter had some rights in regard to his work at Joplin, and that the safe and conservative thing was to secure them for the company; and I felt that we could afford to pay something for that, if anything materialized.

Q. And so, upon the basis of that understanding which you secured from him that he had something, you had told him you would give him $4,000 for the two things; and then when you found out he had misled you, he had been evasive with you, that he had not told you the truth about his patent rights, nevertheless you were still going to give him the $4,000 if he signed the affidavit? A. The mere fact that I found I had been misled by him does not relieve me from meeting my half of the bargain.

Q. You got the understanding from him that he had some patent rights, and he misled you? A. I believed that Clutter either had an application in the patent office—or now as I say, at the first interview, I did not know that he then had no right to apply for a patent on either the combination structure or some detail of the structure at Joplin. I did not know that he had or that he had not, and I desired to make a deal whereby I would secure for the company whatever he might have for whatever it might come to be worth.

Q. But you knew at the time the affidavit was signed that he had no rights, did you not? A. Yes, sir, I believed that at the time he had no rights.

Q. So with that belief, all you were getting was the signature of that affidavit? A. I believed at the time of the signing of the affidavit that that was all that would come of it; you are correct in that.

The Court: Mr. Williams, is that amount $4,000 or $3,400?

Mr. Williams: About $4,000; it was one-quarter of $8,200—no, two quarters.

The Court: You gave him credit for only $1,700.

Mr. Corbett: One quarter down.

The Court: $3,400.

Mr. Mahoney: They made some reduction on account of the fact that he did not get some of the parts; so they had to come down on it. The original agreement was based on $8,200.

The Court: He was entitled to half of $8,200, and by the method of handling the deal, probably on his own election, it amounted to only $3,400, is that true?

Mr. Williams: Because of some counter-credits and charges for parts and things he claimed he did not get. The whole thing was billed at $8,240.00, but he afterwards claimed there were certain scoops or equipment that he did not get. So that should have been reduced. But the contract is clear.

The Court: What does the contract say about the amount?

Mr. Williams: "In consideration of the above the Keystone Driller Co. hereby conveys to Bern. R. Clutter a one fourth ownership in that certain Keystone excavator with equipment as furnished to him under contract-lease dated February 28th, 1925."

Mr. Corbett: It does not give the value.

Mr. Williams: It does not give the value. He was to get a one-quarter interest flat; and then he was to get another one-quarter—

The Court: I understand that. Had he bought that machine at that time?

Mr. Williams: I will just explain that in a moment to get it clear in Your Honor's mind.

The Court: It does not make much difference.

Mr. Williams: There had been some correspondence before that.

The Court: I do not think it makes so much difference.

Mr. Williams: When this thing first came up, the testimony is that Clutter wanted an excavator. They purposed to sell it to him. He did not have the cash. So they would sell it to him, $500 down, the balance on time notes varying in amounts, averaging $425 or $430. The first two notes were a little different in amount.

Mr. May: The first payment was $515.

Mr. Williams: And then the first note was different.

Mr. May: No, they are all even amounts.

The Court: It does not make any difference in the case.

Mr. Williams: He was to get a quarter of it. It was billed to him at $8,200. Approximately, he was to have $4,100, $2,050 immediate credit, and $2,050 contingent credit. But he claims he did not get all the stuff billed to him; therefore the amount was reduced.

The Court: All right.

Q. You recognized that contract as being in force for some years after 1925, did you not? A. As modified from time to time.

Q. By you and Clutter? A. Yes, sir. I regarded the deal as good and that—that is—in the sense as valid; and that we should discharge it.

Q. You said on your direct examination that you learned about Clutter's work at Joplin some time in January, 1921? A. That is right.

Q. You were told by Lyle Hazen? A. That is right.

Q. Who was Lyle Hazen? A. Lyle Hazen was superintendent of our Joplin plant.

Q. What was that Joplin plant? A. The Joplin plant?

Q. At that time. A. At that time it employed relatively fewer men than at Beaver Falls. I don't know how many, but, possibly, 50, as a round number; and manufactured drills; and they had out there two or three steam hammers; and we made drill tools and heavy forged pieces. There was also a sales office there for selling drills, pumps and excavators.

Q. You had a depository there, or warehouse, for excavators, and there was a sales branch there? A. Yes, sir. We occasionally stopped excavators or pumps there.

Q. You also had facilities there for repairing excavators, did you not? A. Yes, sir, to some extent, for the field.

Q. How big a town was Joplin, Mo. at that time, in 1921? A. I do not know at all; I could not guess.

Q. 5,000 or 10,000? A. I would think maybe 10,000, but that might be low.

Q. What did you do to follow up what Mr. Hazen told you about that Joplin work of Clutter? A. To follow it up?

Q. Yes. A. That is, you mean by way of investigation?

Q. Yes, to get further information. A. I asked other visitors from Joplin as I had opportunity at the time of Mr. Hazen's visit, which was at the time of our annual sales conference in January, 1921. And subsequently, I did not, during 1921 and 1922, have any one make any special trip or field investigations, beyond merely inquiring of those who came in from Joplin, and who had seen it. Several of our force had seen the work out there; and once I learned it from Mr. Hazen, I asked Mr. Oliver and Mr. Culbertson, both senior and junior.

Q. And they told you that Wallower or Clutter, or both, had used a ditcher scoop on a Keystone excavator, did they not? A. Their advice was in part confirmatory, that is, there had been this work carried on out there, although it was not long, perhaps 1922 or 1923, I don't know just on what occasion; and I am not sure that all of these, or which ones of these, members of the force were there at the same conference Mr. Hazen was at in 1921.

Q. Was not the first information you got about it that a skimmer scoop had been used on an excavator? A. That a special scoop, patterned after a skimmer scoop, and usable alternately as a skimmer scoop, had been used.

Q. And told it had been used for instroke work? A. That it was hung in place of a regular Clutter bucket, in the same position as the Clutter bucket. I think I understood that from the first from Mr. Hazen.

Q. I show you Exhibit P-73, a statement by H. H. Wallower. Who prepared that statement? A. I don't know—either Brown Ransome, I would say, or Mr. Wallower himself. The statement was secured by Mr. Brown Ransome at our instance from Beaver Falls and upon one of his trips west to the Joplin plant. Brown Ransome was acquainted personally with Mr. Wallower.

Q. It bears date of May 8th, 1925? A. That is correct.

Q. You authorized that statement to be gotten? A. I asked Mr. Ransome to see Mr. Wallower, and asked him to get us a reduction to writing or his recollection of the work he did there at Joplin.

Q. Did you sell a machine to Mr. Wallower at that time? A. No, sir.

Q. What consideration did you give him for this statement? A. He asked no consideration and we offered none.

Q. Did you have any contract with Mr. Wallower of any kind with respect to this statement? A. No, sir, there was no contract.

Q. Did you have any contract with him at any time? A. Oh, we have had contracts with him in his purchase of machines undoubtedly.

Q. When did you sell him machines? A. Well, he owned a machine or two, whichever it was, at the time he did the work there at Joplin.

Q. Clutter's work was done on a Keystone Company machine, was it not? A. That is right.

Q. What other times did you sell Wallower any machines or excavators? A. I don't know whether he ever owned any Keystones other than those two or not.

Q. Mr. Wallower went out of the excavating business about 1921 or thereabouts, did he not? A. I don't know how long he had been in that work. I know he has worked here on this one job. He returned the ditcher attachments to us for credit; and I understand from the depositions here—Mr. Clutter's I believe it is—that he sold his machines sometime along in 1921, I think, thereabouts; but the ditcher attachments were returned to us for credit shortly after the Joplin job.

Q. You mean this skimmer scoop device, or similar to a skimmer scoop Clutter had used on this instroke work? A. No, sir, not the scoop; the dipper attachment; I mean by that the stick, the bridle, and things peculiar to ditching work that he had used in his cellar job.

Q. Now, you said that some employee finally dug up one of those old skimmer scoops that had been used by Clutter in Joplin in 1919 or 1920. Did you see the scoop? A. I didn't say that he dug up one of those scoops. I say that he was instructed to find one if he could and send it in.

Q. Well, did he find one? A. He found a scoop.

Q. He found a scoop. Did you see it? A. I assume that I saw it. I do not remember actually seeing it.

Q. But you don't know whether it was the one that Clutter used or not? A. I couldn't answer for that, whether it is one of the earlier scoops or not. I understood at that time that Mr. Hazen thought it was one, and that is for what it is worth.

Q. What did you do with it? A. I asked Mr. Hazen on one of his trips in to set it up in the shop and rig it, supply the parts that were missing if and as he needed them, taking the skimmer trappings off, if they were with it—I am not certain as to whether they were attached or not—and connected up with the machine.

Q. And after he did that, what did you do with it? Where is it now? A. So far as I know, it is in the plant at Beaver Falls, but I have not checked up to see that it is there. It was laid aside, and I assume that it would not have been destroyed without an authorization.

Q. Well, from 1921, when you first heard of this Clutter development, until 1925, or possibly December of

1924, you never talked to Clutter about it, did you? A. I do not remember that I either did or did not ever talk to or see Clutter. I don't remember whether I saw Bern Clutter between 1921 and '25 or not.

Q. You don't have any personal recollection of ever having spoken to him about this Joplin work until the last of 1924 or in '25? A. Now, Clutter was at the Beaver Falls plant some time along about the time he went to Trinidad, and was to have demonstrated three machines down there for us, and I think that would be after the Joplin work, because it was after I was in the continuous employ of the company.

Q. After you had heard about his work at Joplin? A. I do not connect it that way. It might or might not have been before the date that he was at the Beaver Falls plant.

Q. He was working for you then, or for your company? A. Well, no; but he was to go to Trinidad for us, though he had not up to that time been working for us.

Q. That was some time along in 1922 or '23, wasn't it? A. No, I would say earlier than that, because these Trinidad machines were steamers, and had certain size of boiler I happen to remember, and that size machine, and size boiler, was not shipped in 1922 or '23. A smaller boiler made before that was of the size made in 1920, and I think not later than a month or two into 1921; so if Clutter left in the middle of 1920, I suppose those machines were shipped in early 1920—though I don't know that they were—and then Clutter would have come through there on his way for that demonstration before I had heard of the job. But if it was after January, then I had heard of the Joplin work.

The Court: You say he went to Trinidad for your company?

The Witness: Yes, sir. He did demonstrating for us years before, and worked for us as an operator.

Mr. May: I think it appears pretty clear in Mr. Clutter's deposition.

Q. Well, it is clear that Clutter was not working for the Keystone Company when he did this work at Joplin; that is true, isn't it?

Mr. Richey: On what work, Mr. Williams?

Mr. Williams: At this work on skimmer scoop, or whatever it is; he was working for Wallower.

Mr. Richey: Well, he said he did some of this work on skimmer scoop before he left the employ of the company.

Mr. Mahoney: No.

Mr. Williams: No such testimony.

Q. Well, you don't know whether he did or not? A. You mean, do I know now that Clutter was not in our employ? Yes, I know that now.

Q. That Clutter was not in your employ in the latter part of 1919 or the year 1920? A. I know that now, but I didn't know that then.

Q. But you know that now, that he was then? A. That is correct.

Mr. Richey: Here is what he said, page 23 of his deposition:

"When did you first conceive the idea of using a rigid drop bottom bucket on an instroke ditching machine? A. In 1916.

Q. Why did you not put this idea in use at that time? A. The opportunity was not favorable.

Q. In what way was it not favorable? A. I was working for the Keystone Driller Company and the patent laws as I understood them were such that the company that you are working for hold certain rights over inventions that are gotten out, or are entitled to rights in them."

Mr. Williams: I said that he was not working for the Keystone Company when he did this work in Joplin, and Downie says that is right.

Mr. Richey: You are trying to leave out the important part.

Mr. Williams: Are you now claiming his invention because he conceived it when he may have been working for you?

Mr. Richey: No; I am claiming if he made the invention the company was entitled to it, and it don't make any difference, as far as this case is concerned, who made the invention.

Mr. Corbett: Are you going so far as to say that the company was entitled to it, and that it was all right for Mr. Downie to make an application for it, even though Clutter had developed it?

Mr. Richey: Under the circumstances, yes. Submitted it to a patent lawyer at that time for him to determine, and he determines he is the inventor and files

the application, I will show you authority to the effect that the court at this date should not go back and disturb what patent lawyers and experts did at that time, with all the facts before them.

Mr. Corbett: Do you mean to assert, Mr. Richey, that as a patent attorney, that if this man Clutter made or conceived this invention, and that six years later he had reduced it to practice while in somebody's else employ, that Mr. Downie could file an application and get a valid patent on it?

Mr. Richey: I say it don't make any difference whether Clutter's claim is right or wrong. Of course, you are not setting the facts out as they are.

Mr. Corbett: We are.

Mr. Richey: No, here are a plurality of people working for a company; there are two or three of them who claim to have made the invention. It is submitted to somebody at that time who knows about those things—

Mr. Corbett: That is not the case.

Mr. Richey: Certainly it is.

Mr. Corbett: Who submitted it?

Mr. Richey: He submitted it to Mr. Siggers.

Mr. Williams: Did you tell Siggers that Clutter had conceived this thing in 1916?

Mr. Richey: No, we did not.

Mr. Williams: That is the thing we are talking about.

Q. Did you tell Mr. Siggers, or any of these attorneys, that Clutter had this conception away back in 1916? A. I don't know that I told Siggers in 1925 that Hazen or that Clutter had thought of the scoop further back, because I wasn't sure whether he had.

Q. In fact, you never knew, did you; never heard of it until the Clutter deposition came out? A. I don't know that I did. I may have.

Mr. Richey: The leading case on that is that United States Gypsum case, in the 7th Circuit. Judge Baker wrote the opinion.

Mr. Corbett: Your Honor, we will be glad to argue that point at the proper time.

The Court: Can you give us a reference to the case?

Mr. Richey: I don't remember the citation, but I will look it up and give it to you. To the effect that if a plurality of people work for a company and make an invention and submit it to somebody, at that time to decide whose it is, and the patent lawyer decides, why the

court won't disturb that unless it is a very, very clear case to the contrary.

The Court: Don't the employees have to be under contract to their employer?

Mr. Richey: Yes, I think that is true, Your Honor, but this Mr. Clutter thought at that time, don't you see, that it should go to the company, and no doubt it would have gone to the company, because that is the usual course in those things.

The Court: Well, that was a misapprehension on his part.

Mr. Richey: Yes, that is what I say.

Mr. Corbett: He didn't say that. He said rights, and that might well have been shop rights.

The Court: Well, I am laboring under the assumption that in the absence of a contract to assign, the employer is entitled to nothing but the shop rights of the invention of his employees.

Mr. Richey: Yes, that is the usual thing, and in nearly every case you will find that is what happens where people work this way. And that is what Clutter said. And that is another insight to his character. He thought the company would get a shop right in it, and that he didn't do it because he thought he could beat them out of it. He admits that.

Mr. Williams: Well, they know the fellow they were dealing with.

Q. Now, you said that you made up a credit memorandum to go on Clutter's account when you came back from Lakewood. Now, when was that? A. Well, that would be from the date of the affidavit along in the latter part of April, 1925.

Q. To whom did you give that credit memorandum? A. To Mr. Smith.

Q. And that called for a credit of one-fourth of the price of the machine, did it not? A. That is right; that is what it was to be.

Q. And that was the absolute credit, and of course not the contingent one? A. That is right; unconditioned and forthwith.

Q. Although it did not get on the books for about a year and a half or something like that? A. Apparently not.

The Court: Well, didn't that one-quarter credit get on the books, Mr. Williams, December 31, 1926?

Mr. Williams: That got on the books December 31, 1926,—about a year and eight or nine months after it was due.

The Witness: Well, Mr. Smith said that he thought that was in some way a contingent credit. That was his misunderstanding.

The Court: Well, it looks now as if he might have been right about that.

Mr. Williams: Yes, it took a long time to get it there.

The Witness: Well, I didn't know, and I thought that during that year and nine months that that credit had been issued and that Clutter's account had been reduced accordingly, and was always explicit with Mr. Smith, if he had asked me about Clutter's account, that it should be looked at in the light of—that is, an actual account taken for what it was as having been reduced by the credit. I did not know at the time that came out that Clutter had been held out of his credit.

Q. When did you repossess this first Clutter machine? A. Well, it would be along in 1927.

Q. Well, it was about the time that he was given the credit of $4,250.00, dated August 11, 1927? A. Yes, that would be about the date. Something a little prior to that, because this showed that the machine had been sold to somebody else, and the equity transferred to another account.

The Court: Did you have the advice of counsel in the preparation of the Bern Clutter affidavit and the Bern Clutter agreement?

The Witness: I had talked to Mr. Siggers about it, whether it would be—you mean the advice of counsel as to whether to secure the affidavit?

The Court: No; did they assist you in any way in preparation?

The Witness: No, sir. I drafted the affidavit.

The Court: And also the agreement?

The Witness: The agreement also.

The Court: Who drafted the Wallower affidavit?

The Witness: That was made at Joplin, or at that place in Oklahoma, wherever Mr. Wallower executed it, and according to whether he had it drawn or whether Mr. Ransome had it drawn, I cannot answer as to the Wallower affidavit.

Q. Prior to the time that Wagner and B. C. Clutter came to see you in Beaver Falls, your company had

served notice on Star Driller Company of infringement of your patent, had you not? A. You say, prior to that?

Q. Prior to that visit? A. Yes, prior to that time.

Q. So there was first the notice of infringement of your patent, and then that visit by them to you? A. Well, you say "then"—that was not immediately following.

Q. Well, I mean after that? A. Yes, I mean subsequently.

Q. And your company has never brought suit against the Star Driller Company, has it? A. No, we have not entered suit. We have only entered suit against about three or four of the fifteen infringers.

Q. Mr. Downie, I show you an affidavit purporting to have been signed by yourself and filed in this case on December 31, 1930. I ask you if that is your signature at the bottom of the last page? A. Yes, sir, that is my signature.

Q. And you swore to it as appears there as having been subscribed and sworn to before a notary? A. Yes, sir.

(Affidavit referred to marked "Defendant's Exhibit 129.")

The Court: I assume as to that affidavit, Mr. Williams, if you think that is contrary to his testimony, you ought to call his attention to anything you are relying upon and give him a chance to explain it.

Q. Now, Mr. Downie, I read in this affidavit that has been marked Exhibit 129, this statement: "As soon as I learned of the Joplin machine and experiment, I investigated the same and reported what I learned about the machine and the experiment to Mr. E. G. Siggers, Washington, D. C., who was at that time our patent attorney and who is now deceased. I also reported to him my own work on the machine of the patent. Mr. Siggers reported that the Joplin experiment was an abandoned experiment. He also advised that the patent application should be filed in my name, which was done at his advice. He prepared the application for the patent, advising me that it did not embody any invention in the Joplin machine, and accordingly I signed the same and it was filed." Now, that was the understanding of the facts as you had them in 1921 and also when you signed that affidavit, is it not? A. That is correct.

Q. Your claim was then and is now that there was no invention of Clutter's in your patent? A. That is right.

Mr. Richey: He moreover claimed there was no invention in what he done.

Mr. Williams: So it is not the question of filing an application in the name of one man or another. They are not the same thing—so they claim.

Mr. Richey: Well, we say that there is nothing in common between the two.

The Court: They would have the right to show, on their theory of it, if you could show it was invention, you could show it on another theory.

Mr. Richey: Well, we present it on the theory that there wasn't invention in what Clutter did and you come along and say it is, and that we have it in our patent. We say if that is so, then it was put up to Mr. Siggers to say in whose name it was to be filed, and he said Mr. Downie's.

Mr. Corbett: We don't say that there was any invention in what Mr. Clutter did. We say it was old, and he did it in public, and after he did it in public, nobody could come along and claim invention on it.

The Court: You claim this is so old that even Bernard Clutter couldn't get a patent on it?

Mr. Corbett: Why, surely, but aside from that, there is nothing in this record to show that the Keystone Driller Company or Bernard Clutter—as to whether the application should be put in his name or in the name of someone else.

The Court: That is not the claim.

Mr. Williams: Well, that is what Mr. Richey is claiming.

The Court: Oh, no.

Mr. Richey: I said he claimed he made the invention while he was in our employ, and he concealed it because he knew, or at least thought we were entitled to it, and that if it had gone on and developed, that it would have ultimately developed that that was so. Now, that is your witness who says it was ours, or thought it was ours and tried to hide it away.

Mr. Williams: It was not disclosed until 1929, when he testified. That is the first anybody knew about it.

Mr. Richey: Well, nobody knew about it until 1920 out at Joplin.

Mr. Williams: No, not of the fact that he did it in 1916, no.

I will introduce this Exhibit 129 in evidence—you may take the witness.

RE-DIRECT EXAMINATION by Mr. May.

Q. You were asked, Mr. Downie, by Mr. Williams, if you had made any inquiry anywhere as to this Joplin contraption and use, and you stated that you had from persons that came from Joplin to your plant. And then you were asked what was the nature of the information you obtained, and you answered it in general. Can you tell us the names of any person, and what information such person conveyed to you was? A. In general, as I have said, it was corrective as to the place and as to the time, and confirmatory of Hazen as to the machine, in a general way, consisted of—

Q. What do you mean by "corrective of the place and the time"? A. I think Mr. Hazen advised me in 1921 that this work was done in Carthage, Missouri, rather than at Joplin, and that the time had been earlier by some two years or thereabouts than later appeared to be the fact. And in my report to Mr. Siggers, I so advised him of that same thing. Now, as I went along talking to other individuals as they came in from Joplin, in the course of the next two or three years, I learned, as I say, the fact about those two things and some details as to construction and use; one that I recall I learned from Mr. Oliver, and I think from one other of the Joplin men, and that was as to the use of the bucket, that they had great difficulty in getting the spoil out, or getting the bucket dumped, and Mr. Oliver told me that the final form of latch release mechanism was one in which the teamster was required to carry a club with him on the seat of the wagon, and when the bucket was brought over the wagon for discharge, the teamster stood up on the wheel of the wagon and struck a certain point on the back of the bucket, or on the latch of the back of the bucket, to release the load, and then jumped from the wagon, because, of course, of the gravel or clay spillage. He also confirmed as to being the two main difficulties in operation, that they had trouble getting the bucket shut and getting it to stay shut, and then getting it open, because of the flexure in that body and the mounting of the bucket, the general lack of rigidity, etc. Mr. Hazen, and I think Mr. Oliver, were in agreement as to the skimmer

having been used to complete the excavation. I think that the other fellows did not remember that—Phil Culbertson, and one or two others. The different individuals gave me different estimates as to how much had been dug, and of course they had varying impressions as to the degree of bothersomeness, and difficulty encountered in the use of the first Clutter ditcher, that is the Leroy Clutter ditcher, that was used for the first part of the excavation.

Mr. Corbett: Your Honor, this is all hearsay, and some of these witnesses have been on the stand and testified in this case.

The Court: Well, he has gone over it. I guess he is about at the end of it now, anyhow, aren't you, Mr. May?

Mr. May: I have just one other question.

Q. I show you Exhibit 27 of the defendant, and ask you what that is? A. This is a letter written by me to Bern Clutter, dated February 20, 1926.

Q. And that is an exhibit in the case here, is it? A. Exhibit No. 27, defendant's exhibit.

Q. Is that after the affidavit of April 17? A. Yes, sir, after Clutter's affidavit. It is an inquiry of him to find out whether he used side rake teeth.

Mr. Williams: I think that will speak for itself.

The Court: Well, of course, that is always so, that a letter speaks for itself, unless there is a point as to abbreviations or code or something like that.

Mr. May: That is all, Mr. Downie.

RE-CROSS EXAMINATION by Mr. Williams.

Q. Mr. Downie, Mr. Oliver is still alive, isn't he? The man you speak of? A. Mr. Oliver is at the Joplin plant.

Q. Of the Keystone Company? A. Of the company.

Q. Mr. Theodore Smith is still working for you, isn't he? A. Yes, sir.

Q. Where is he located? A. He is located at Beaver Falls.

Q. What is his position? A. He is treasurer of the company.

Mr. Williams: That is all, I guess.

Mr. Corbett: Your Honor, Mr. Fay is here from Cleveland, and he is a very short witness—he is a patent attorney, and we would like to put him on now.

The Court: All right. Any objection to Mr. Fay being put on?

Mr. Richey: None whatever.

HORACE B. FAY, a witness called by defendants, being first duly sworn, testified as follows:

DIRECT EXAMINATION by Mr. Corbett.

My name is Horace B. Fay. I am 43 years of age. I reside at Shaker Heights, Ohio. I am a patent attorney. I am the Horace B. Fay who was attorney for the Byers Company, in the recent litigation between the Keystone vs. Byers.

Q. In the motion to produce certain papers in this case, a brief was filed by the plaintiff, dated January 3, 1931, and in that brief appeared the following statement: "We further say that since this matter came up, Mr. Richey has talked to Mr. Horace Fay, who conducted the defense in the Byers case, and that Mr. Fay has advised him that he was informed of this Joplin experiment and Joplin machine as early as March, 1929, through a party who gave his name as Bernard Ross, and who offered to sell the information for five thousand dollars or more. Mr. Fay reports that he reported the matter to Mr. Shaffer, one of the officers of the Byers Company, and that he is informed that Mr. Shaffer made some investigations regarding the Joplin experiment and machine, but that nothing came of it. We further say that we have learned from other sources that Bernard Ross was the name which Bernard Clutter was giving as an alias in certain negotiations that he was making for the purpose of selling the information which he has given in his deposition in these cases. It is irresistible to conclude that either Mr. Shaffer and Mr. Fay agreed with us that the Joplin experiment and machines were immaterial, or that they came to the conclusion that Mr. Clutter was simply another one of those persons who, on learning that the patent has been sustained, seeks opportunity to make some money by selling information, either fabricating or greatly exaggerating the prior work of somebody."

Will you please state whether or not you agree with that statement of your knowledge and what transpired in any conversation that you may have had with Mr. Richey? A. I would rather state just what occurred, than whether I agree with the statement or not.

Q. Well, state what occurred? A. I think the District Court's decision in our case was given some time in January, 1929. Very late in February, or very early in March of that year, a person called up the Byers Machine Company, who gave his name as Bernard Ross, and said that he had information for sale for a large sum of money, which would invalidate the patent involved in our suit. I have forgotten who was the president at that time, but I think it was Mr. Baker. He has that man telephone me, and then Mr. Ross did, and repeated that same statement to me, asking me if we were interested, and I said we were interested in talking to him, would he come to see me. He didn't come to see me, and he said he was going to New Jersey and would be back through Cleveland within a week. I think he said he was going to Asbury Park, N. J. I heard nothing further from him at all, and within a few days or a week, I sent him a telegram, which was undelivered, and I never heard anything more from this Bernard Ross.

About some time in December last Mr. Richey called me up and said he was coming to see me. When he came he said that this litigation had got to a point where the parties were throwing mud and making charges regarding some suppression of evidence. He asked me if I didn't know all about the Joplin use. I knew nothing about the Joplin use, and I knew so little about what he was talking about that it took me several minutes before it occurred to me that we had had this offer from this Bernard Ross. I told Mr. Richey about that and he said, "That is the same fellow"; that his name is Bernard Ross Clutter; he made you that offer, and then he made that same offer to other people. I did not know anything about the Joplin use, or the Joplin use by Bernard Clutter, and I have never heard before nor since about Bernard Ross.

Q. Did Mr. Bernard Ross, or Bernard Ross Clutter, tell you over the phone any of the nature of the development that he had, or information that he had? A. No, he was very indefinite, and merely said that he had evidence which would invalidate all of the patents involved in our suit.

Q. And when did you first obtain information as to the nature of this development, this Bernard Clutter development? A. From the depositions and the testimony given in this case here, through Mr. Wilson of our office, who has been present.

Q. And it was at the time Mr. Wilson was present during the actual trial when the depositions were read; is that correct? A. Yes, sir.

The Court: Did this man phone you before the decree went on in the Byers case in Cleveland, or afterward?

The Witness: I think it was after it went on.

Mr. Corbett: That is all.

Cross Examination by Mr. Richey.

Q. When I came into your office and told you that this litigation had gotten into the mud slinging stage I asked you if you knew about this Joplin experiment, didn't I? A. Yes, sir.

Q. And you went on and told me about this Bernard Ross matter? A. As soon as it occurred to me, I told you about that, yes, sir.

Q. And you did not say at that time that you did not know that Bernard Ross was connected up with the Joplin experiment, did you? A. I knew nothing about the Joplin experiment.

Q. In answer to my request as to whether you knew about the Joplin experiment, you replied by telling me about Bernard Ross? A. As soon as I recalled it, yes, sir.

Q. Well, you also said that you had turned the matter of looking into it over to Mr. Shaffer, didn't you? A. I think I was incorrect about that, because I think Mr. Baker was the president of the Byers Company at that time. I told him about it, yes.

Q. But you told me that you had told Mr. Shaffer—whether you are right or whether you are wrong in remembering it was Mr. Shaffer or not—you told me that it was Mr. Shaffer that you did turn it over to? A. No, I didn't put it that way. I said this man had called me and Mr. Shaffer, but I think it was Mr. Baker, and I said that we did nothing more about it because we didn't know where Bernard Ross was or how to reach him.

Q. Didn't you tell me you left Mr. Shaffer to investigate it? A. I say, I knew nothing further about it.

Q. I am trying to find out what you told me. A. I don't recall whether I just made that statement or not.

Q. Well, that is my recollection of it, that you said you had taken it up with Mr. Shaffer and you left it to him to look into. Now, can you say that you did not say that? A. I may have said that; I don't know.

Q. Now, did you tell me at that time that you had been informed later on that Mr. Shaffer had made some investigation? A. No.

Q. You are certain you didn't tell me that? A. No, sir.

Q. I am not asking you whether he did or not, but I am asking what you told me? A. No, sir.

Q. And if I say you did tell me that, why you deny it, do you? A. Well, I don't think I said that.

Q. Well, you think you didn't tell me that; you have no recollection positively one way or the other on that? A. I am quite sure I didn't.

Q. If I say you did say it, you won't deny it, would you? A. Yes, I would.

Q. Because I made this memorandum directly after leaving you. Now, do you deny that you said at that time that this offer had been for $5000 or more? A. It was a large sum of money and I cannot be positive of the amount.

Q. Well, you mentioned the sum of $5000, didn't you? A. Well, I think it was that or more. I couldn't say the exact amount.

Q. You kept no note of the conversation, did you? A. No, sir.

Q. You still represent the Byers Company in that case, don't you? A. Yes, sir.

Q. Has there been a combination of the infringers of this patent to defendant part of the case, to your knowledge? A. Not to my knowledge.

Q. Has there ever been any to defend the accounting in Cleveland in the Byers case? A. No, sir. In fact, we have been refused information repeatedly by Mr. Corbett, and assistance by him in the last six months.

Q. Your firm is one of the oldest patent law firms in Cleveland, isn't it? A. Yes, sir.

Q. Have been practicing there for a number of years, haven't they? A. Yes, sir.

Q. You conducted the defense of the Byers case from beginning to end, didn't you? A. Yes, sir.

Q. Your firm is in court almost constantly in patent infringement litigation, isn't it? A. We are in court most terms, yes.

Q. And you had had considerable experience in the prosecution of patent infringement suits before you took up this Byers case, hadn't you? A. Some.

Q. You consulted with your associates regarding this Byers case from time to time in the preparation and trial of it? A. Yes.

Q. You employed Mr. Wadsworth as your expert, didn't you? A. Yes, sir.

Q. You had employed him in a number of patent infringement suits before, hadn't you? A. Yes.

Q. He is a well established and recognized patent expert of ability, isn't he? A. I think so.

Q. Now, you attended all the hearings and all the depositions in the Byers case, didn't you, yourself? A. I think so.

Q. You examined all the witnesses at the trial of that case? A. Yes, sir.

Q. And you prepared the brief in both courts and argued the case in the Court of Appeals? A. I assisted in preparing the briefs.

Q. And you argued the case in the Court of Appeals? A. Yes, sir.

Q. You were present at the demonstration attended by Judge Westenhaver? A. Yes, sir.

Q. You and Mr. Wadsworth both were there? A. Yes, sir.

Q. You knew about the use of the Mahoney machine before you tried the Byers case, didn't you? A. I was told about it.

Q. And you didn't look into it? A. Personally, no.

Q. Did you have anybody look into it? A. Mr. Shaffer of the Byers Company.

Q. And I suppose you didn't think it was worth taking—you didn't take it, anyway? A. I have forgotten just what our reason was for not taking any depositions in regard to it.

Q. You considered the defense in the Byers case was well conducted, don't you? A. From the result, no.

Q. Well, you did the best you could on it, didn't you —you and Mr. Wadsworth? A. Yes, sir.

Q. And you gave the same kind of services you would give in other cases? A. Yes.

Mr. Richey: That is all.

Re-Direct Examination by Mr. Corbett.

Q. Mr. Fay, my recollection is that I talked with you once about the Mahoney device, and that you told me

that you had had the Mahoney patent under consideration, and that your Mr. Beckwith was to investigate the matter for your company, and they were unable to locate Mahoney; does that accord with your recollection? A. I don't remember whether they didn't locate Mahoney, or whether they located the machine or something about it, but not the man personally. I have no recollection on it.

Mr. Corbett: That is all.

Mr. Richey: That is all. I want to make a statement to Your Honor that the part of my brief that Mr. Corbett read was recorded by me directly after I left Mr. Fay's office, and it was my recollection of the conversation—the language that Mr. Corbett read to Mr. Fay. He agreed with me on most of the points, but there are one or two things upon which our recollection differs. The brief is dated in January, and it is my recollection that it was rewritten. I think Mr. Fay was right about the date in December, and I dictated it when I got back, and then it was rewritten. I have no doubt Mr. Fay stated his recollection correctly, and I know I am mine.

PHILIP E. SIGGERS, a witness called by plaintiff, being first duly sworn testified as follows:

DIRECT EXAMINATION by Mr. May.

My name is Philip E. Siggers. I live in Washington, D. C. I am 37 years of age. I am a patent lawyer. The first time I came in contact with any one connected with the Keystone Driller Company was on July 24, 1925. I was then an associate with the firm of Emory, Booth, Janney & Varney, whose offices were in Chicago, Illinois; I was then under Mr. Janney who was in charge of that office. The circumstances under which I met the Keystone Driller Company is as follows: My late father, E. G. Siggers, came to Chicago to place certain litigation in the hands of Mr. Janney, or in the hands of that office for which I was working. He arrived on that morning of July 24, 1925, and met at the office Mr. Rex Downie, and we had an all day conference with one or two others present, and during that conference all of the facts then known to Mr. Rex Downie about the Joplin experiment were fully outlined. The two exhibits consisting of the affidavit of Herbert H. Wallower and

Bernard R. Clutter were exhibited to Mr. Janney and myself, and they were discussed. And I can identify those exhibits as being at the office at that time. I recall the discussion and conversation that took place at the conference. In the first place, it was an all day conference, attended by five or six men, and it was the first time that my father had attempted to deliver to that office a litigation or any sort of work which he hoped I would play some part in. I was then in Chicago, and he was in Washington, and he wanted me to play some part in this litigation, and so it made a very strong impression on me. And the particular thing that perhaps most strongly impressed me during the conference was the fact that in the course of the consideration of the data then available concerning the Joplin experiment, Mr. Janney rose up from his seat and said that he thought that he might—

Mr. Williams: Just a minute. Now, what is the purpose of this testimony?

The Witness: If you will let me go on, you will see, Mr. Williams.

Mr. Williams: Just a minute—I am talking to the court.

The Witness: Pardon me.

Mr. Williams: If he is dealing with information that came to Mr. Janney, upon which Mr. Janney made his determination, that is one thing—and the only thing, it seems to me, that is here admissible.

The Court: Well, the theory of the plaintiff's knowledge or advice is admissible. I guess that is what this is for.

Mr. May: That is what I am coming to.

Mr. Williams: Well, I don't think motions and so on the court is concerned with. Just what was said and what he was told.

The Court: That is what he is going to tell.

Mr. Williams: Well, he has a long way getting to it.

The Court: Well, let's get at it, then.

The Witness: Shall I finish my narrative?

The Court: Yes.

The Witness: Mr. Janney said that he was inclined to recommend that all the facts of this Joplin experiment be laid before the court when the case came up for trial.

The Court: Do you want that stricken out, Mr. Williams?

Mr. Williams: No, I think I will let that stand.

The Witness: (Continuing.) However, that it was a tentative conclusion, subject to change after he had gone deeper into the matter. And Mr. Rex Downie, who was present during the entire conference, immediately said that the Keystone Driller Company did not want to lay any obstacles in such a course if counsel advised that that was the wisest course; that they would follow precisely whatever course was advised by counsel, and they would be perfectly willing to lay all the facts before the court. That same thing happened again in the second conference, in January, 1926, in the same office.

I can identify Plaintiff's Exhibit 273 and Defendant's Exhibit 113 as the exhibits to which I referred as having been shown at the first conference in Mr. Janney's office. As to whether litigation was begun by this firm of Emory, Booth, Janney & Varney, I will say that suits were brought in December, 1926, against the Byers Machine Company and the Bay City Dredge Works. This firm continued in charge of these suits until the time of my resignation from the firm, which was effective February 1, 1927, and at that time it was understood between Mr. Janney and me that each was to handle the work of his own clients in the future.

I moved to Washington on February 9, 1927, and shortly thereafter I went to the plant of the Keystone Driller Company, probably around February 16th or 20th, and saw Mr. Rex Downie and other officials of the company, and I advised them very strongly to employ counsel who would act in a senior capacity in the suit in Cleveland, and I was instrumental in having Mr. Richey called up, and we arranged for an interview the next day, and Mr. Rex Downie and I went there the next day and laid the general facts of the case before him. I can fix that exact date by reference to a diary I keep, but I would have to wire for the data.

The Court: Was it before this Cleveland suit was filed?

The Witness: The Cleveland suit was filed along the latter part of December, 1926.

The Court: This was before that?

The Witness: This was after. This was in February, 1927, after the suit was filed, but before anything had been done.

(Narrative continued.) The result of this conference in Cleveland was that Mr. Richey and his firm were retained to prosecute the litigation against the Byers Company as senior counsel. The entire case was laid before Mr. Richey in a more or less sketchy way at the conference, and repeatedly thereafter and in numerous conferences details of the entire case, and particularly the Joplin experiment were fully revealed to Mr. Richey. The two affidavits, Exhibits 73 and 113, were submitted to Mr. Richey at the first conference, but if not the first, it surely was the second conference, which followed within a week or two.

I recall very definitely two conferences in Beaver Falls which are pertinent, one before we went to see Mr. Richey, and a conference which was attended by myself, Mr. Rex Downie, his brother Vail Downie, and Mr. Robert Patterson, at which this Joplin experiment was considered, and what the company was to do about it.

The Court: That was before your letter was written to B. C. Clutter and to Wagner?

The Witness: A long time before; before we went up to see Mr. Richey at Cleveland. I remember very distinctly a very late afternoon conference that was attended by these men.

(Narrative continued.) As to the attitude of either of Messrs. Downies at this conference—why, the attitude of every man present was precisely what it had been in previous conferences, namely that the Keystone Driller Company was perfectly willing to lay the facts of this Joplin experiment before the court if counsel advised that that was the wisest thing to do. And in a later conference, which was in 1929, attended by Mr. Robert Patterson, Mr. Vail Downie, Mr. Rex Downie, Mr. May—that is, yourself—and myself and Mr. Richey, the same thing was threshed over again, and the same conclusion.

The second conference with reference to the letters that the court asked about, the letters to B. C. Clutter and George B. Wagner, was before that, very shortly before when those letters were sent. I hadn't seen those letters personally, so I can't tell exactly when but I feel sure it was before those letters were sent. I remember what occasioned the conference. The company was considering the question of licensing various companies, in-

cluding the Star Driller Company, and other questions, with reference to the progress of the litigation, and so on. At the time of the meeting the details of the meeting with B. C. Clutter and George E. Wagner were told us verbally, that is, the people who were assembled, by Mr. Rex Downie. That is, the proposition that had been advanced by George E. Wagner was laid before the assembly and was considered by the entire group of men in that room. And the conclusion was reached to write the letters which are exhibits in this case to which I have referred.

Mr. May: That is all.

CROSS EXAMINATION by Mr. Williams.

At the first conference in January in Mr. Janney's office there was present besides Rex Downie, my father, myself and Mr. Janney, Mr. Dan Holmes, who is head of the Waukegan, Illinois office of the Keystone Driller Company. He was present during the entire conference, and he was here, incidentally, during the early part of the trial. The details of this whole situation with reference to the development of these patents, were given to this conference, as then understood.

Q. As then understood? A. Yes, sir.

Q. Well, I suppose they couldn't be given in any other way except as then understood, could they? A. Well, all the details of Mr. Downie's—Mr. Downie's knowledge has progressed, you understand, as he has gotten in the facts.

Q. Well, of course he could not have told you a year ago of something he learned just yesterday. A. That is correct.

Q. So that all the information you got at that conference, you got from these two affidavits— A. No.

Q. Well, just let me finish; if I am wrong, you can supplement it. All the information you got was from these two affidavits and from Rex Downie, or, if not, what other information did you get?—A. Well, that is, strictly speaking, correct, although Mr. Downie did make sketches and showed certain parts and so on, so as to make perfectly clear what his knowledge was.

Q. Well, now, listen to the question—I asked you if you got the full information at that conference from Mr. Downie and from these two papers and if not, from what other source? A. That is correct.

The Court: Was this agreement, Exhibit 98, shown to you?

The Witness: I don't remember of seeing that until a year or more afterwards. I don't remember of seeing it.

The Court: Well, when was that in the progress of the Cleveland litigation?

The Witness: With respect to the Cleveland litigation? It must have been shown before the trial; I feel sure it must have been before the trial, but I cannot say when. We had a large number of conferences. I was up there two or three times a month, two or three times a month up in Cleveland conferring with Mr. Richey and Mr. Downie. Just when that was shown, I can't say.

Q. You think it was about a year after this conference you had in Mr. Janney's office, which was on July 24, 1925? A. It may have been nine months; I couldn't say.

Q. But you did not see it at that time? A. I did not see it in the first conference.

Q. And you say at that time Mr. Janney said he was inclined to recommend laying the whole matter before the court, and you all agreed, did you not? A. Agreed to what?

Q. Agreed to that advice. He said he was inclined to so advise. Now, did the rest of you agree, or disagree? A. Mr. Janney was to be employed as senior counsel. Mr. Rex Downie was to take and follow his advice fully, and of course I was entirely willing to follow his advice.

Q. Well, then the answer is yes, isn't it? A. Yes.

The Court: Did you ever learn, Mr. Siggers, at any of these conferences, that some part of $3400 had been paid for the Bern Clutter affidavit, Exhibit 113?

The Witness: Why, I learned that there was a credit contingent upon—there was to be a contingent credit, and also an immediate credit, yes.

The Court: Did you know what that was likely to amount to?

The Witness: I was told it was—each credit was one-fourth of the cost of a machine—yes, I knew what it amounted to. I knew that the machine sold for between seven and eight thousand dollars, yes.

The Court: This first agreement, Exhibit 98, was not shown to Mr. Janney, then?

The Witness: Not that I recall. There were only two conferences with Mr. Janney. They were both very

long conferences. One was in July, 1925, and the other early in January, 1926, and I do not recall that that agreement was ever shown to Mr. Janney. If it was, it has simply passed out of my mind, that is all.

(Narrative continued.) Mr. Janney never definitely advised that the matter be laid before the court. At that second conference he said again that it might be a wise thing to do, however, that he was reserving judgment, and he never finally decided that matter one way or the other, or for that matter, any matter connected with the suit. The next general conference to which I referred was the one when I went to Cleveland and had a conference with Mr. Richey and Mr. Downie and that was in February, 1927. At that time I laid before Mr. Richey the two affidavits, one by Clutter and one by Wallower. I cannot remember laying before him at that time this Exhibit 98 or so-called memorandum or contract. In fact, if I remember correctly, the original agreement was in the possession of Mr. Downie and was brought out in one of those early conferences, but not during the first conference. As to when Mr. Janney saw it, I feel reasonably certain that Mr. Janney did not see it. I am positive that Mr. Richey saw it, but I can't say when. As to whether we came to the conclusion at this conference that this matter should be submitted to the Court, I would say that we came to the conclusion that in the first place, let me make it perfectly clear that the firm of Emory, Booth, Janney and Varney came to the conclusion that the Joplin experiment was an abandoned experiment, or otherwise they would not have brought the suit. The reason I said a few minutes ago that Mr. Janney never arrived at a conclusion—

Q. Well, now, just a minute; answer the question.

The Witness: I want to make this clear, Your Honor.

Mr. Williams: Well, answer the question.

The Court: If you want to explain your answer, that is all right.

Mr. Williams: Just answer the question first, and then explain it, and we will save time.

(Last question read)

A. No, no such conclusion was ever arrived at during any conference that I ever attended.

The Court: That is, with Mr. Janney.

The Witness: Mr. Janney or anybody else.

The Court: As I understand your testimony, the effect of it is that Mr. Janney gave an opinion which tentatively leaned toward submitting it to the court?

The Witness: Yes, sir.

The Court: And that he never—his connection with the case was severed before he ever changed that opinion?

The Witness: That is correct, Your Honor.

Q. Now, then, was that opinion expressed then in the conference with Mr. Richey? A. I told Mr. Richey Mr. Janney's tentative conclusion, and Mr. Janney never saw Mr. Richey in connection with this suit.

Q. Just answer the question, please?

(Last question read)

A. Expressed by whom?

Q. Why, Mr. Richey and all of you, or by those participating in the conference? A. You mean, was the opinion that the whole matter ought to be laid before the court—

Q. Yes; what decision did you come to, or did the conference come to, on that subject? A. We came to the conclusion that the Joplin experiment was an abandoned experiment and it was not worth while to bring it to the attention of the court.

Q. So the conclusion was reached then that you would not bring it to the attention of the court? A. Yes, sir.

Q. Now, then, you said that after that you had two conferences at Beaver Falls, as I have it in order of time. A. After what?

Q. After the first conference with Mr. Richey in Cleveland? A. No, we had one before.

Q. Well, all right; I have got my notes in order here, that your conferences were first with Janney, and then the conference with Mr. Richey in February, 1927, and the statement to him, and then my notes show after that two conferences at Beaver Falls? A. No, you are mistaken, Mr. Williams.

Q. Well, I am telling you what my notes show in order. Now, when were those two conferences held in Beaver Falls? A. There was a conference at Beaver Falls attended by myself, Mr. Rex Downie, Mr. Vail Downie, and Mr. Robert Patterson, and that was before we went to see Mr. Richey. And then there was another one afterwards.

Q. I have in my notes here, at that conference the company expressed its willingness to lay this Joplin matter before the court? A. That is correct.

Q. You so said, did you not? A. Yes, that is correct.

Q. Then you had a conference with Mr. Richey, and then you had a second conference at Beaver Falls; is that right? A. We had a great many conferences with Mr. Richey.

Q. Well, you said two conferences at Beaver Falls, and one with Mr. Richey. Now, put them in order any way you want to. I am trying to get them in order. A. Well, I am trying to help you; we had a great many conferences.

Q. Well, you spoke about the first conference with Mr. Richey? A. Yes, sir.

Q. Before that you had had a conference at Beaver Falls, with Rex Downie, Vail Downie, Patterson, and yourself? A. Yes.

Q. And then after your first conference, then you had your conference with Mr. Richey in Cleveland you now say? A. Yes, sir.

Q. And then after that you had a second conference at Beaver Falls? A. Yes, a long time afterwards.

Q. How long afterwards? A. In 1929.

The Court: After the Byers suit had been filed in Cleveland.

Q. All right, I have in my notes that Rex Downie—

The Court: We will not follow your notes; evidently they are wrong.

Q. I don't think they are. I have the note, you said again at that conference you came to the same judgment, to submit the matter to the court.

Mr. May: There is one interview with Mr. Richey between those two Beaver Falls conferences?

The Witness: I would answer, but he won't let me.

Q. All right. After the second conference in Beaver Falls, did you or did you not say a while ago that you came to the same conclusion, that the company was willing to submit this Joplin matter to the court? A. No, we didn't come to any conclusion.

The Court: That case had been decided then, in Cleveland, hadn't it?

Mr. Williams: He said two conferences, and he has not said—has not set the time, but as to each it was that

they came to the same judgment, so my notes show. And I am trying to find out.

The Court: Well, as my notes go, and I don't guarantee them, Mr. Richey went up to Beaver Falls once, and that was after the case was decided, and it was prompted by the payment of B. C. Clutter and George Wagner to get a license. They said it was immediately prior to April 12, 1929, and the Byers case was decided by Judge Jones on January 23, 1929.

Q. Well, I will get at it this way, then: At this conference, the second conference that you spoke of in your direct examination at Beaver Falls, in which there were present Patterson, Rex Downie, Vail Downie, yourself, Mr. May and Mr. Richey, did you at that conference take up the question as to whether this Joplin matter should be submitted to the court? A. That was briefly discussed, and the company officials then present again said that they would be entirely willing if counsel advised, to lay this matter before the court.

The Court: Well, you mean after the case was closed in Cleveland?

The Witness: Well, we had other litigation, Your Honor; we had pending three suits.

The Court: You mean you discussed the advisability of disclosing this matter in subsequent litigation?

The Witness: Yes.

The Court: Subsequent to the Cleveland case?

The Witness: Yes, because we said all along that sooner or later all these facts would be known. They could not be suppressed; a dozen people knew them.

The Court: That straightens it out, doesn't it?

Mr. Williams: That straightens it out, yes. That is what my notes show. I had an awful time getting him to agree to it, though.

The Court: But you made one mistake, Mr. Williams.

Mr. Williams: I will try to rectify any mistakes.

The Court: You remember what the judge's notes were in Pickwick Papers?

Mr. Williams: I am afraid I don't.

The Court: Well, there was no appeal from them.

Mr. Williams: Well, I am just trying to find out if he agreed with my notes, and I now claim that he does.

Q. Well, now, the next question is, if the company officials expressed their willingness to abide by the judgment of attorneys or counsel, what was the advice of

counsel on the subject? A. The advice of counsel—you mean by Mr. Janney and mine, and Mr. Richey?

Q. Well, I understand Mr. Janney first said he was inclined to do it. Now, we have got that. A. I started to explain a few minutes ago, and you cut me off.

Q. All right, now go ahead. A. You see, Mr. Janney—you will pardon me for explaining a few things in advance, and not cutting me off. Mr. Janney was out of the city a great deal of the time. This suit dragged along for a year and a half, and finally I got desperate to get the case pressed, and the Keystone Driller Company were most anxious to bring the suit, and Mr. Janney turned the suit over to Mr. Dowell, and Mr. Dowell, who was the next senior man in the firm, and Mr. Dowell went into this matter then, Mr. Osgood H. Dowell; I laid the entire matter before him, and after going into the matter thoroughly, as Mr. Janney's right hand man, decided that the Joplin experiment was an abandoned experiment, and that we should bring the suits, which we accordingly did. He prepared the bills of complaint, and upon Mr. Janney's return from one of his extended trips, they were finally approved, and they were filed in December, 1926, the three suits.

Q. Have you finished with that? A. Yes, sir.

Q. I thought you were going to comment on the subject, not of bringing the suits, but whether this Joplin matter had been agreed upon? A. I brought out the fact that Mr. Osgood H. Dowell passed on that matter in Mr. Janney's firm, and that Mr. Janney's counsel finally abandoned that matter.

The Court: He just expressed that tentative opinion.

The Witness: And then let it go.

The Court: As far as he was concerned, it floated downstream?

The Witness: It floated downstream finally.

Q. Do you know what information that Mr. Dowell had that Mr. Janney did not have, that led to this change of opinion? A. There wasn't any change of opinion. Mr. Dowell agreed that we had a good case, agreed with my conclusion that we had a good case, and we decided to file the suit.

Q. I am not talking about filing the suit. I am talking about bringing the Joplin matter to the attention of the court. Now, you said Mr. Janney expressed the opinion tentatively, subject to reversal, that that should be done, didn't he? A. Yes, sir.

Q. Now, then, you say subsequently Mr. Dowell, or McDowell,—what was his name? A. Dowell.

Q. Came to a different conclusion, that it should not be submitted to the court; is that correct? A. No, he never came to a conclusion.

Q. Well, did you ever submit it to the court? A. No.

Q. Well, then, did you fail to submit it, without thinking about it, or coming to any conclusion about it? A. No, you see, Mr. Williams, all that was ever done in the firm was the filing of these bills of complaint. That is absolutely all that happened. After that I got out of the firm and went to Mr. Richey. Mr. Dowell passed completely out of the picture, and whatever his final conclusion may have been, never came to light. I don't know what his final conclusion would have been if we had gone on with that. I know that he agreed that it looked like an abandoned experiment to him, otherwise he would not have brought the suit.

Q. I am not asking about the bringing of the suit, and I am inquiring about the Joplin matter. I am simply trying to find out when and how and for what reason counsel's opinion as to whether the Joplin matter should be brought to the attention of the court was changed. Now, can you tell me that? A. I am not aware that it ever was changed.

Q. Well, let's start with A, B, C and D. Mr. Janney expressed the opinion that he would expose it to the court, didn't he? A. He said that, subject to possibly change of opinion after he got deeper into the matter.

Q. Well, all I am asking is, what happened to change that opinion. I understood you to say the rest of you attorneys at the conference agreed with his expression of opinion. Is that correct? A. There was only one other attorney present; that was myself.

Q. Well, your father was there? A. Yes, that is correct. At the first conference, not at the second.

Q. Well, that opinion was expressed at the first conference, wasn't it? A. Yes.

Q. And Mr. Rex Downie was there, wasn't he?

Mr. Richey: Mr. Downie isn't an attorney.

Q. No. Well, Mr. Rex Downie, who was not an attorney, was also there; is that correct? A. That is correct. He was there at both of them. He has been at every conference.

Q. Now, then, I will ask you again—as I understand it, you and your father and Mr. Downie agreed with Mr. Janney. If you didn't, did you disagree? A. I and my father and Mr. Downie agreed with Mr. Janney, you say?

Q. Yes, in that expression of opinion as to whether the Joplin matter should be brought to the attention of the court? A. My father never said that in his opinion it should be brought to the attention of the court. He said all along it was an abandoned experiment, and stuck to his original conclusion.

Q. Then he did not agree with Mr. Janney? A. He neither agreed nor disagreed.

Q. He just said nothing; is that right? A. No, he didn't say nothing. He said in his opinion it was an abandoned experiment, and it was not necessary to call it to the attention of the court.

Q. Well, then he said it wasn't necessary? A. That is correct.

Q. Now, what, if anything, did he say as to the advisability or not, then? A. Well, he didn't—if I remember correctly, he didn't think it was advisable because it was an abandoned experiment. That is the best of my recollection.

Q. That "abandoned experiment," I have heard that so much and read it so much, I am getting a fixed idea on it. A. I can't remember his exact words.

Q. Well, did you agree or disagree with Mr. Janney's opinion at that time, at that conference? A. Why, I was perfectly willing to follow Mr. Janney, that it might be best to call it to the attention of the court, at first.

Q. Well, now, when did you change your opinion? A. Why, after I got into it deeper and got more facts from Mr. Rex Downie and learned more about the case, we decided that we had a good case and that we should go ahead, and that there was no need of bringing the matter to the attention of the court.

Q. Well, now, I wonder if I can get you to separate those two ideas. Even Mr. Janney, when he thought it might be advisable to lay the Joplin matter before the court, was considering bringing the suit, wasn't he? A. He surely was.

Q. And he didn't expect to lay the matter before the court unless he did bring the suit, did he? A. No.

Q. He didn't expect to bring the matter before the court until he had actually brought the infringement suit, did he? A. That is correct.

Q. All right. Now, then, assuming that you had concluded you had a good case, which you could lay before the court, when did you change your mind as to the advisability of exposing this Joplin matter to the court? A. Why, I spent a lot of time looking up law during the years 1925 and '26. I had a lot of time to look up a lot of law. I can't say when I changed my mind, but I know I changed it.

Q. Well, did you change your mind before or after you saw this contract of April 11, 1925? A. I changed it a long time before I saw the contract.

Q. So seeing the contract had nothing to do with it? A. No.

Q. Well, now as I understand you, at the first conference—oh, no, I guess that is right. Your statement was that the officials of the Keystone Driller Company were willing to abide by the decision of counsel as to whether or not this matter should be brought to the attention of the court? A. Yes, sir.

Q. So presumably they didn't change their mind at any time on that; never changed this mind; counsel changed their mind? A. No. I said I was perfectly willing to follow Mr. Janney as my undetermined conclusion, but I have also said after I looked into it deeper, I came to the conclusion that it was an abandoned experiment. I have never changed my mind; it was rather a growth of mind, rather than change of it.

Q. Well, all right, but I am trying to find out, when did you change your opinion as to whether it should be submitted to the court? A. I didn't change my opinion.

Q. Then the tentative opinion you agreed with of Mr. Janney was not an opinion?

The Court: The way I understand that, Mr. Williams, Mr. Janney was the guiding star of that litigation, so far as Mr. Siggers was concerned, and it wasn't necessary for him to take any position.

Mr. Williams: He said he agreed with him.

The Court: No, he said he agreed to go along with Mr. Janney because he was the chief counsel.

Mr. Williams: Well, I didn't quite understand it so.

The Court: And that afterwards the occasion arose where he had to make up his own mind, and then he gradually came to the conclusion that this was an abandoned experiment, and probably abandoned to such an extent that he thought it should not be laid before the

court. That is what I understood this witness' position.

Q. Well, Mr. Janney thought it was an abandoned experiment, didn't he? A. Mr. Janney thought it was an abandoned experiment, but wasn't sure of all the facts. He had not looked into it; he had only the facts there that Rex Downie had brought, so there weren't enough to come to a final conclusion, until he had talked with witnesses and so on.

Q. Even so, but at the time he expressed that opinion, he thought it was an abandoned experiment, didn't he? A. Didn't say.

Q. You didn't hear him say what he thought about that? A. No. He didn't arrive at any final conclusion, Mr. Williams. I can't say whether he thought it was an abandoned experiment or not. He didn't tell me.

Q. Well, when did the attorneys decide, or counsel decide; not to bring this Joplin matter to the attention of the court? A. Well, that final decision was made in the office of Richey & Watts, Cleveland, during one of our numerous conferences there, and by "us," I mean conferences between Mr. Rex Downie and myself and Mr. Richey.

The Court: Well, was it prior to—

The Witness: Prior to the bringing of the suit—I mean prior to the trial of the court.

The Court: Prior to the trial of the Byers suit?

The Witness: Yes, sir. Some time possibly March, 1927, or late February, 1927, and September, 1927, when the case was argued. Some time before June; I can even date it closer than that, because the case came very near being tried in June of 1927.

Q. The depositions of Bernard Clutter were taken in February, 1930, weren't they, about? A. Yes, sir.

Q. And at that time this contract was brought to light, was it not? A. I believe so. I did not attend that deposition.

Q. How long before the taking of that deposition did you know about this contract? A. I must have known of that contract, socalled contract, some time in the spring of 1927. In fact, I am positive I did.

Q. And that came to the knowledge of all counsel in the case at about that same time? A. Mr. Richey and myself, yes.

Mr. Williams: All right, that is all.
The Court: Anything further?
Mr. May: Not of Mr. Siggers.

Rex R. Downie, a witness called by Plaintiff, being first duly sworn testified as follows:

Direct Examination by Mr. May.

Q. In explanation of calling Mr. Downie, I had inquired of him only as to the two affidavits, because the agreement itself has no statement of facts referring to the Joplin matter. So since that has been brought into the case by the court, I want to ask Mr. Downie to whom and when did you exhibit this Exhibit No. 98, is it?

The Court: 98, yes.

A. That is the memorandum, and what was there more to your question?

(Question read)

A. That would be from the time of the writing of it, I told Mr. E. G. Siggers first, having effected the agreement with Mr. Clutter.

The Court: That is Mr. Siggers, Sr., is it?

The Witness: Yes, sir, our general counsel at Washington, I mean, patent counsel. And then my recollection is not the same as Mr. Siggers in the matter of this memorandum having been presented at the first conference with Mr. Janney at Chicago. As I recall it, this was submitted along with the affidavit of Mr. Clutter, the affidavit of Mr. Wallower, the notes or oral information that we had accumulated up to that time from whoever knew anything about the Joplin experiment, and as to the number of people who knew of it, and the number of employes and non-employes, etc. Then the memorandum was, I think, also presented to Mr. Siggers at the same time—it must have been if he attended the conference—and was again presented to Mr. Richey at the first presentation of the material of the case to him.

Q. Do you recall any of the remarks of Mr. Janney at the first conference with reference to this Joplin incident information? A. Yes, I remember about Mr. Janney's listening to the story of what they had made and of the work, and I recall the incident here that Mr. Siggers has referred to, as to the possible advisability

of presenting this matter at the outset to Judge Westenhaver, or whatever Judge—

Q. Do you remember Mr. Janney's words? A. As I remember it, it is not exactly as Mr. Siggers recalls it. I think he said, now, it might be justifiable as a gesture of honesty at the outset of a case to present to the court the information that we have acquired as to the Joplin suit, and this transaction here with Mr. Clutter. But I recall definitely the word "gesture" and its very apt use in such matter.

Mr. May: That is all.

The Court: Any further cross examination?

Mr. Williams: No.

Mr. Richey: I would like to ask Mr. Fay just another question.

Q. Mr. Fay, that Byers case is still pending on an interlocutory decree, isn't it? A. Yes, sir.

Q. And no motion has been made to reopen and take this testimony, has it? A. No, sir.

The Court: As I understand it, from what the clerk said around here, they have made a motion to reopen it down at Cincinnati. Is that so?

Mr. Richey: No, sir.

Q. No motion has been filed at Cincinnati for leave in the Circuit Court of Appeals to reopen this case for this testimony? A. I cannot answer that definitely, because the case is in the hands of other counsel.

Q. Who are the other counsel? A. Zane, Morse & Norman.

Mr. Richey: Well, I may say that when I left Cleveland, no such papers had been served on us. We have had no notice of it in our office. There have been one or two settlements, and consent decree in another case, and other settlement negotiations with the Star Company within the last couple of weeks.

Mr. Williams: Now, are those statements made for the record here?

Mr. Richey: Yes, sir.

Mr. Williams: I think that is entirely improper, that any question of settlement with other people should be put into this record.

The Court: Well, it is in now; I will leave it.

Mr. Williams: I move to strike it out.

The Court: Well, you can't strike it out. Anyway, it is in there.

Mr. Williams: Well, I will take my exceptions.

The Court: All right; take your exceptions.

Mr. Richey: Now, I don't remember the exact date when this Wallower or Clutter affidavits were submitted to me, but they were submitted to me before the trial in the Byers case. I don't remember when that Exhibit 98 was first submitted to me—

The Court: That is the agreement?

Mr. Richey: Yes, sir. Nor do I remember that any one told me about what Mr. Janney said about the advisability of submitting this to the court, except that I do remember when I first heard it, it was with the statement, as Mr. Downie says, that it was a gesture of honesty.

The Court: Of course, Mr. Richey, you did see Exhibit 98, unless the intimate connection between the Exhibit 98 and 113 were explained to you, it wouldn't help you any, anyway. The question was whether you got all the facts as they have developed in this hearing.

Mr. Richey: Well, I went over the thing, and it looked to me like an abandoned experiment, and didn't anticipate anyway, and I saw no need of burdening the court with a lot of testimony that did not seem to me to be material. And I still have that view.

Mr. Corbett: Have you finished with Mr. Fay, Mr. Richey?

Mr. Richey: I think so. Mr. Downie did suggest to me that the matter might be called to the attention of the court and I told him I didn't think it was necessary, and any way there were a number of people that knew about it, and it could be found out by the defendant, if the defendant thought it proper.

The Court: Did he tell you that before the trial of the Cleveland case?

Mr. Richey: Yes, sir. That is, I knew about this alleged Joplin experiment before the trial in the Cleveland case, but, as I say, it is in my opinion an abandoned experiment, and the claims were not anticipated by it anyway, and there are about one hundred prior devices in the case, and about a million that might be put into it, abandoned experiments, and all kinds of things that people now would contend that was pertinent to the case, just as this defendant here has brought in a lot of things that were culled out of that case, and it might just as well

be said that we should call the attention of the court to those.

The Court: Well, is the case closed now all around?

Mr. Williams: We have no further witnesses, but we want to read into the record some parts of this brief.

Mr. Richey: Let's agree to put in that whole brief, if you want to put in a part of it.

Mr. Williams: Well, I don't want to add to this record any more than necessary.

The Court: Well, we understand that you may supplement it by such other parts of the brief as you think are relevant.

Mr. Richey: What part are you going to put in?

Mr. Williams: I wish to read from the brief of the plaintiff appellee in the United States Circuit Court of Appeals for the Sixth Circuit in the case of The Byers Machine Company and Byers Machine Company vs. Keystone Driller Company, quoting from the top of page 43 of the brief as follows:

> "If new results are the test of invention, it is present here. Nobody before Downie had conceived how a dump bottom could be mounted and operated in an inward arc machine, or otherwise had seen how the bottom could be closed or operated to dislodge the sticky spoil or to root in a trench. Nobody had been able to see that before."

And then on page 45 of the brief, after speaking of certain defects in the Clutter ditching machine, the brief proceeds—that is, Leroy Clutter—

> "On the other hand there were perhaps a thousand skilled mechanics working daily with the five or six hundred Clutter machines used. All these mechanics experienced the inconvenience of the shortcomings of the Clutter machine. All were also familiar with the drop ends of bottoms in the steam shovels and skimmers which were often working on the same job with the Clutter ditcher; all were familiar with the advantages of dumping through an openable part of the scoop; many had operated shovels and skimmers in that way; yet not one of these mechanics saw how to apply the drop member to the Clutter machine. Any number of contractors were equipped to put the skimmer bucket on the Clutter's ditcher, if that was all there was to it."

And in substance, the same statements were made in the District Court in Cleveland in that same case, in the brief of the Keystone Driller Company.

The Court: Do you care to read in any of the brief?

Mr. Richey: Why, I would like to take advantage of Your Honor's offer to look it over and see if there is anything there.

The Court: All right; anything further outside of that?

Mr. Mahoney: Merely we have some objections we want to put in; we reserved them some time ago.

The Court: Well, you want to be doing it right away. When do you think you are going to make the objections? It certainly is not fair to counsel who have to meet the objections, to wait until the case is closed, and then expect counsel to revamp their position if they can, in view of the objections.

Mr. Corbett: Your Honor, that is all.

The Court: You have no objections?

Mr. Corbett: No objections.

The Court: Then I understand the case is closed, with the single exception, Mr. Richey, that you are entitled to read into the record any parts of your brief which you desire to read into it, in view of these last offers on the part of the defendant.

Mr. Richey: Yes.

The Court: We will start the oral argument at 9:30 tomorrow morning.

(Wednesday morning session, May 13, 1931.)

Mr. Richey: If the Court please, on this question of the brief, I have looked over the brief and I am going to offer in evidence a copy of the entire brief. What is our next number?

The Clerk: P-76.

Mr. Corbett: I understood, Your Honor, he was to be permitted to introduce just the things to which this matter related.

Mr. Richey: I do that because excerpts which the other side has read into the record must be considered in connection with the spirit of the whole brief. The whole brief is written upon the proposition that the practice of patent law is based upon successful things, not failures, and that is the decision of the Court of Appeals. They have read two excerpts in there, intending to use them to show that they are in conflict with what we knew of

and of course what we knew of as being a failure. So I offer the whole brief in evidence.

Mr. Corbett: Objection.

The Court: You may make arrangements to have it sent up as a physical exhibit. I do not think you are meeting the contention by putting in the whole brief. That is your business, not mine. I thought the way to meet what they put in was to put something in that counteracts that. If you think it takes the whole brief, put it in.

Mr. Richey: There is no desire to counteract what has been said. The thing to do is to show the context and the surroundings of it.

The Court: All right.

Mr. Richey: Now there were stipulations in this case.

Mr. Williams: Before we pass from that, I think Your Honor's suggestion should be followed and that this P-76 should be filed as a physical exhibit.

Mr. Richey: I will file it as a physical exhibit. It does not need to be reprinted.

Both sides rested.

The above and foregoing was all the evidence offered and received at the trial of the above-entitled cause.

Thereupon arguments were had by counsel for the respective parties.

MEMORANDUM OPINION.

(Filed June 22, 1931.)

[Cases Nos. 964 and 965]

HAHN, *J.*:

These two cases were consolidated for the purposes of trial and involve the validity and alleged infringement of five patents:

Clutter Patent No. 1,317,431, ditching or excavating machine (claim 4);

First Downie Patent, 1,511,114, excavating machine (claims 6, 7, 8, 9, 10, 11, 12, 13 and 14);

Second Downie Patent, 1,543,250, elimination of blind spot (claims 1, 2, 3, 4, 5, 6, 9 and 10);

Third Downie Patent, 1,709,466, ditcher-scoop assembly (claims 1, 2, 8, 10, 11, 12, 13, 15 and 19); and

Fourth Downie Patent, 1,716,432, side rake tooth (claims 1, 14, 16 and 18).

The cases involve substantially the same issues, which are supported by the same testimony. The only exception is that The General Excavator Company alone is claimed to infringe the last patent named, the Fourth Downie Patent, 1,716,432, because of the manufacture by that company in the year 1929 of thirty-one side rake teeth.

The three patents first named were in suit in the Eastern Division of this District. Their validity was sustained and the decision of the District Court was affirmed: *Byers Machine Company v. Keystone Driller Company*, 44 F. (2d) 283. This case has been referred to in the evidence as the Cleveland suit and as the Byers suit. It is urged here that the binding effect of this decision is such in these cases that this court should not reconsider the question of validity of the first three patents named, although a different record has been made in this court. In discussing the rule to be applied to the binding effect of prior decisions various phrasings have been employed by the courts.[1]

---

[1] See *Federal Electric Co. v. Flexlume Corp.* (C. C. A. 7), 33 F. (2d) 413, certiorari denied, 280 U. S. 590, holding decision on patent once sustained on appeal should be followed unless clearly shown to be erroneous, though new matter, not merely cumulative, will be given full consideration.

CLUTTER PATENT No. 1,317,431.

As to this patent new and impressive evidence as to the prior art has been offered, and this evidence has to some extent been met by new evidence offered on behalf of the plaintiff. I have examined it carefully and have come to the conclusion that it is not so clear that the District Court and the Circuit Court of Appeals would have come to a different conclusion upon the record before me and hence that I should follow the decision in the Byers case. It is more fitting and proper that the new evidence and new arguments should be addressed to the Circuit Court of Appeals. Accordingly I hold the Clutter patent to be valid and infringed.

THE FIRST DOWNIE PATENT, No. 1,511,114.

The defense as to this patent was no invention and non-infringement, and it was further claimed that the plaintiff through its general manager, Rex Downie, who was also the patentee, suppressed material evidence relative to certain work done in Joplin, Missouri, several months prior to the filing of his application; and that by reason of the suppression of such evidence the plaintiff comes into this court of equity with unclean hands and should be denied any relief in this court of equity. I shall consider this issue later on in this opinion.

THE SECOND DOWNIE PATENT, No. 1,543,250.

As to this patent I find that the defendants' machine does not infringe.

Referring to this patent the Circuit Court of Appeals said, at page 285:

> "Of the second Downie patent little need be said. Its main purpose was to eliminate the so-called blind spot in the unloading operation. This was accomplished by the adding of abutments or bumpers to the link connection with the ditcher stick."

Ray et al., v. S. T. Johnson Co., 33 F. (2d) 632; and *Lektophone Corp. v. Miller Bros. Co.*, 37 F. (2d) 580. Decision of another circuit court of appeals should be followed, &c.

Thomson Spot Welder Co. v. Ford Motor Co., 268 Fed. 836, Killits, *J.* Larger and different record.

Meurer Steel Barrel Co. v. Draper Mfg. Co., 260 Fed. 410, Westenhaver, *J.* In the absence of clear conviction upon essentially the same record.

See *Outlook Co. v. Presto Cloth Mfg. Co.* (C. C. A. 6), 267 Fed. 193; and 48 *C. J.* 408, Note 66 (a).

It appears from the evidence that the blind spot does not interfere (or seldomly so) with the machine during the digging operation, and interferes with the operation of the machine only when it is sought to unload the spoil at very high altitudes. This is also the situation with the Keystone machine. To prevent the blind spot Downie contrived the stops and abutments which are the subject matter of his second patent. The defendants have a machine somewhat different in construction so far as this patent is concerned, and I am satisfied from the evidence that that difference in construction between the plaintiff's machine and the defendants' machine reduces the interference from the blind spot in the defendants' machine to a negligible quantity.

The difference between the plaintiff's construction and that of the defendants is aptly illustrated in Def. Ex. 85, Chart 60, where both devices are illustrated. The difference is that the upper arm of the ditcher stick of defendants' devices is longer than that of the plaintiff's. This distance upon the plaintiff's machine is represented by the distance A to B on the upper figure of Def. Ex. 85. As to the defendants' machines it is represented by the distance C-D in the lower figure of the above exhibit. See also Def. Ex. 34, Def. Ex. 87, Chart 40, and Charts 41 and 42 which do not seem to have been given an exhibit number, but which were used in the evidence and in the argument. The testimony is that if the distance between A-B in the upper figure of the first-named were increased the range of the operation in which the blind spot would occur would be decreased. Downie who testified as an expert on his own behalf practically admitted this contention, adding however that to increase the length of the upper arm of the ditcher stick would be to impair the efficiency of the excavator in other unnamed respects.

Defendant does not have the stops and abutments of the Downie patent, but it is said that the channel beam on the inside of defendants' ditcher stick performs the same function as the stops and abutments of Downie's patent, and that this is especially so when a triangular portion is cut from the extreme upper part of the channel beam as appears to have been done in some of the defendants' machines. It is said that the channel beam is an equivalent and that the Downie patent is infringed. In my opinion whatever may be said of defendants' infringement of claim 4 of the Clutter machine, it is con-

structed in a materially different way so far as the patent now under consideration is involved. This construction practically avoids the blind spot, and the channel beam is said to reinforce and does reinforce the boom of the defendants' machine. It does not seem to me that this channel beam is the equivalent of the stops and abutments of the Downie patent, even though in performing other normal functions it prevents the occurrence of the blind spot.

The validity of this patent was sustained by the Circuit Court of Appeals upon the ground that it was an improvement in the several elements of the Clutter device, and, as an improvement patent it is entitled to only a narrow range of equivalents. Downie's patent, it seems to me, gave him the right to exclude others from using stops and abutments for the purpose of eliminating the blind spot of an excavating machine. It gave him the right within a narrow range to exclude the use of equivalents; but it did not give him the right to exclude others from eliminating the blind spot by other means, nor did it give him the right to exclude others from so constructing their machines that the blind spot would not occur within the normal cycle of operation. It seems to me that to hold the channel beam in this instance to be an equivalent would go a long way toward holding that Downie had the right to exclude any one from eliminating the blind spot from his machine. What was said by Judge Hickenlooper, in *Merit Oil Equipment Co. v. Frey Equipment Corporation*, 48 F. (2d) 488, at page 489, is particularly apropos here:

> "We are of the opinion that in so far as the means disclosed for keeping the strainer clean is of the essence of the inventive step, even though of but one element of the machine or combination, the patentee may not claim any, all, and every means for accomplishing the desired result."

And see the following authorities: *Walker on Patents*, 6th Edition, Section 414, Note 62, Note 66-b; Sections 416, 417, Note 100-a; *Holland Furniture Company v. Perkins Glue Company*, 277 U. S. 245, 257, 72 L. ed. 868, p. 873.

THE THIRD DOWNIE PATENT, No. 1,709,466.

This patent covers the means of using scoops of different widths upon the same machine, making them detachable and interchangeable.

I have been unable to find patentable invention in this third Downie patent. It relates to an adaptation of the parts of the ditcher sticks and scoops to the end that scoops of different widths may be used interchangeably upon the same machine. The patent does not relate to or concern the functions of the machine when in operation. It provides for changes of scoops before such operation. In that sense it is not an improvement patent.[2] When it became apparent that a machine must use more than one width of scoop and that the utility and salability of machines would be increased if provision were made for using scoops of different widths interchangeably, the problem of this patent presented itself, and it seems to me that any mechanic skilled in this art and many related arts would have readily solved the problem. It is conceded that the idea of interchangeability of parts such as scoops was not new. It was obvious that rigidity was necessary and easily attainable, and that durability was desirable for the structure must be rugged to be able to withstand the shocks of operation. Any highly skilled mechanic familiar with this art or related arts it seems to me would have met the problem in somewhat the same way that Downie did in this patent. Both of the defendants have met the problem, though in different ways. See Def. Ex. 81, Chart 102, the General excavator; Def. Ex. 91, Chart 101, the Osgood machine.

I conclude from the evidence that there is no patentable invention in putting bolts in tension rather than in shear. See King, No. 589,565.

I have examined the file wrapper, Def. Ex. 66, to ascertain if the presumption of novelty and invention arising from the issuance of the patent requires a different conclusion. I think it is outweighed by the evidence adduced on behalf of the defendants. Included in that evidence is the evidence relating to the former (1884) Osgood devices, Def. Exs. 68 and 69, and the Thew device, Def. Ex. 59-A. The file wrapper shows only one

[2] In the Byers case, at page 284, the court said: "The other patents in suit relate to improvements in the several elements of the Clutter device of the class which usually follow the disclosure of new instrumentalities in their evolution toward perfection in doing the work originally contemplated."

reference by the examiner (Black, 1,107,252, August 18, 1914), and the file wrapper does not indicate that any extensive consideration of this patent was undertaken by the Patent Office. The presumption of novelty and invention has not been strengthened in this instance. *Gairing Tool Company v. Eclipse Interchangeable Counterbore Co.* (C. C. A. 6), 48 F. (2d) 73, 75.

Nor do I think that any doubt which I may have should be resolved in favor of novelty and invention because of the commercial success of the Keystone machine as a whole. That commercial success was proven in the Byers case, but was not satisfactorily proven in this case. The patent now under consideration was not before the Circuit Court of Appeals and it could hardly be claimed on the record here that Downie's particular means of interchanging scoops contributed to any appreciable extent to the commercial success of the Keystone machine. *Haggerty v. Rawlings Mfg. Co.* (C. C. A. 8), 14 F. (2d) 928, 930.

Concerning this patent the further thought has always appealed to me, that if there is patentable invention here the range of equivalents would be very narrow. In my opinion it would be so narrow as not to include either of the devices of the defendants.

THE FOURTH DOWNIE PATENT, No. 1,716,432.

As already indicated it is claimed that The General Excavator Company alone infringed this patent because in the year 1929 it manufactured thirty-one side rake teeth of the type of defendant's physical exhibit, No. 82. A wooden model of plaintiff's side rake tooth is Plaintiff's Exhibit No. 63. I have come to the conclusion from an examination of all of the evidence that this patent is a valid improvement patent and within the spirit of the decision and principles of the Byers case. In this instance the file wrapper, Def. Ex. 83, shows that the patent office considered and rejected as anticipations many references to the prior art "and this at least greatly strengthened the presumption of novelty and invention which arises from the grant of the patent." *Gairing Tool Company v. Eclipse Interchangeable Counterbore Co., supra,* and I conclude from all of the evidence that Downie's contribution presents a case of patentable invention.

Only a word need be said about infringement. Defendant's Exhibit 82 is very similar to the plaintiff's

device, Pl. Ex. 63, and it performs the same functions in substantially the same way, with the exception only that the defendant has impaired the horizontal cutting edge of its side rake teeth. It has attempted to avoid infringement by impairing the efficiency of its device. It cannot in that way escape infringement. *Gibbs v. Triumph Trap Co.* (C. C. A. 2), 26 F. (2d) 312, 314; *King Ax Co. v. Hubbard* (C. C. A. 6), 97 Fed. 795; and *Penfield v. Chambers* (C. C. A. 6), 92 Fed. 630, at page 653.

SUPPRESSION OF EVIDENCE ISSUE AS TO DOWNIE PATENT No. 1,511,114.

As already stated as to this patent defendants claim that it was anticipated by the work of one Bernard R. Clutter done at Joplin, Missouri, in the fall of 1919 and the early months of the year 1920. As to whether or not this work anticipates Downie's patent, I do not think I should determine for the same reasons which I have given herein in considering Clutter, 1,317,431. New evidence is here presented as to this claimed anticipation. The matter can more properly and more fittingly be presented to the Circuit Court of Appeals.

I feel free to decide the further contention as to the suppression of evidence made with reference to this patent because it involves to some extent the credibility of witnesses; and the issue, it seems to me, must be decided by the Circuit Court of Appeals. I have given it very careful consideration. The contention is that all of the evidence with reference to the Joplin work was very material and relevant in this case and that Rex Downie, the patentee, when general manager of the plaintiff company, made agreements whose tendency was to suppress this evidence, and by his acts and conduct intended to and did suppress evidence relating to the Joplin work; that that suppression was operative in the Byers case, both in the District Court and in the Circuit Court of Appeals; and that it has been operative to such an extent in this case that the plaintiff comes into this court of equity with unclean hands and that this court of equity should deny equitable relief to the plaintiff company. It is further argued that Downie's acts and conduct in the above respect adversely affect his credibility in this case, and that because of this suppression of evidence in the Byers case, this court should not consider the Byers case as having any binding effect in this case.

The defendants' claim as to the initial agreement to suppress evidence as to a claimed anticipation of this patent concerns itself initially with two conferences which resulted in the signing of an affidavit, Def. Ex. 113, and an agreement to pay compensation, as provided for in an unsigned memorandum, Def. Ex. 114 (the original), Def. Ex. 98 (the carbon copy). In order to appreciate the character of the defendants' contention, it is necessary to have in mind the devices in use and the patents prior to Downie's Patent No. 1,511,114.

Period About Latter Part of 1919 and Early Part of 1920.

At this time the Keystone Driller Company was making a ditching and excavating machine under Clutter Patent 1,317,431, which was involved in the Byers suit in the Circuit Court of Appeals, and its validity was there sustained. Attention is directed to the character of the scoop and its method of attachment. See Plaintiff's Exhibit No. 1, 4-A of Figure 1, at 2. The scoop had no drop bottom and was pivotally attached to the ditcher stick. This caused difficulty in unloading where it was desired to unload the spoil into wagons standing nearby. There was difficulty in spotting the load and the scoop often injured the sides and other parts of the wagon. Clutter said the difficulty principally was the spilling of the material over the sides of the wagon. This was caused by the pitching forward of the scoop when dumped which was caused by the cable hook-up. The scoop had a tendency to pitch forward. This was caused principally by the strain of the cable on the attachment. Wallower testified: "In tripping the latch of the pivoted bucket it was difficult to control the dumping at its intended place and resulted in much spillage of spoil and the wreckage of dump wagons." Downie refers to the breaking of the wagons in his application for his patent. See pages 5 and 54 of the file wrapper, Def. Ex. 65. And in the Byers case, at page 285, the court said: "The Clutter machine could spot the load accurately, *but it could not dump it accurately.* Clutter's construction was incapable of loosening a sticky clay load from the scoop without destroying the accuracy of the unloading process."

During the above period Burn. R. Clutter (brother of Leroy P. Clutter, patentee in No. 1,317,431) was em-

ployed in excavating for a cellar at Joplin, Missouri. He was employed by Wallower Brothers. A machine of the Leroy P. Clutter type was being used in the work and in operating the same he encountered spillage when unloading the scoop. There had also been allowed to Leroy P. Clutter a prior patent, No. 1,107,899, of August 18, 1914, Def. Ex. 25. This patent in part involved a skimmer scoop with a drop bottom. See patent, figure 9, and especially middle sheet of Pl. Ex. 21.

The idea of making such a change having first come to him in 1916, Burn. R. Clutter in his excavating work at Joplin went to the Joplin branch of the plaintiff company, and with Herbert H. Wallower, of Wallower Brothers, requested the plaintiff's employees to make alterations in two skimmer scoops (one was used and one was held against emergencies) to the end that he might rigidly attach a drop bottom scoop to the ditcher stick and unload the same by dropping the bottom of the same, the purpose being to avoid the difficulties encountered in using a pivotally attached scoop. He testified that he ordered the brackets or carrying rack which supports the skimmer scoop to be removed and holes drilled into the skimmer scoop so that it could be attached to the ditcher stick, the same as ditcher stick 3 in patent No. 1,317,431. He used the same attachment that was made for the regular ditcher scoop No. 3. The straps which supported the old type ditcher scoops were fastened to the front of the scoop as on the ditcher scoop of 1,317,431. A pulling member was attached to the skimmer scoop for pulling it toward the machine when used on the in-stroke ditching machine by bail attached to the skimmer scoop, the same as in the ditcher scoop 3 of the above patent. He was told at the Joplin branch that he would not be able to close the door on the bucket, but the changes were made and the skimmer scoop had a drop bottom thereon pivoted at the side walls of the scoop like that shown in Clutter Patent 1,107,899, Def. Ex. 25, at the front end of the scoop. The skimmer scoop was made rigid first by a wedge under the latched hook spring 15 of patent 1,317,431, and this not proving satisfactory later Clutter took the latch hook off and used a block underpin 5 which was formerly movable through a slot 16-A between guide 6 and scoop carrying member 1. This block or plank extended the entire length of the slot 16-A. This held the scoop rigidly when in use. The result of the changes appears in detail in a blueprint,

Def. Ex. 26, and needs no further elaboration. See also Pl. Ex. 2, Downie's patent, p. 4 (claim 6), lines 126-130. The blueprint was made from a drawing made in 1929; and it seems that this is a matter which might in all of the circumstances of this case be proven by a single witness. *Corona Company v. Dovan Corp.*, 276 U. S. 358, at page 382. There were of course other witnesses also in this case.

As to the result of the changes, Clutter testified that he did not have much further trouble with dirt spilling over the sides of wagons; that they had a little trouble at first closing the bottom of the drop bottom scoop, but later they were able to do this by swinging and slapping the bottom shut. This was the forerunner of momentum closing of the scoop referred to in the Byers case (p. 285). At first this closing was attempted by using two men with a pole running under the boom "which crept up and pulled the bottom shut." Clutter testified that he was able to close the bottom by the motion of the boom and ditcher stick and thus swing the bottom shut. In other words he claims to have flipped the bottom shut until the latch closed. There was trouble because in dumping them they had to keep men on the opposite side of the wagons from the machines and pull the latch closed. And Clutter testified that it did not require much of an improvement to remedy this situation. The reconstructed device was used on this job for possibly a month or more and many of the employees of the Joplin branch of the plaintiff company, including Mr. Oliver, who was superintendent of the branch, Mr. Culbertson, Mr. Blosser, Mr. Hazen and possibly Mr. Ransome, saw the reconstructed excavator in operation. Wallower testified: "By facilitating the dumping of sticky, clayey and other material from the scoop, and also by being able to more accurately dump the material in the wagons with less spillage and less delay than was formerly encountered."

Proceedings After the Completion of the Joplin, Missouri, Work.

Downie testified that he conceived his invention embodied in Patent 1,511,114, in the summer of 1920, and that he conveyed the details of his conception to E. G. Siggers, Sr. (now deceased), his patent attorney, in Washington, D. C., about December 18, 1920, and that the data relative thereto was supplied to Mr. Siggers

in February, 1921. He further testified he first heard or had any knowledge of the work at Joplin, Missouri, in January, 1921, when some information relative thereto was conveyed to him by Mr. Oliver and Mr. Hazen. It is claimed by Downie that at this time he was informed that the work of Burn. Clutter had been done at Carthage, Missouri, and it was not until later that he learned that the work was done at Joplin. His patent application was filed June 27, 1921, and allowed and issued October 7, 1924. Upon the issuance of the patent the plaintiff company, and particularly Mr. Downie, as he testified, contemplated the bringing of various suits against infringers; and it was then that it occurred to Mr. Downie that it was advisable to learn the details of the Joplin, Missouri, work, and to enter into some kind of arrangement or agreement with Mr. Bernard Clutter. He testified that there may have been three conferences with Mr. Clutter, but the record presents details of only two conferences.

Two Conferences Between Rex R. Downie and Bernard Clutter, One Under Date of April 16, 1925, and One Prior Thereto.

At the first of the above conferences Mr. Rex Downie, accompanied by Mr. Elmire from the New York branch of the plaintiff company and who lives in Arlington, New Jersey, visited Mr. Burn. Clutter at his home at Lakewood, New Jersey, during the evening. As they were leaving, Mr. Downie and Mr. Clutter had a private conversation and had some kind of an understanding the details and scope of which do not appear with definiteness by direct evidence. April 16, 1925, Downie and Elmire again called on Mr. Clutter, at Lawrence Harbor, New Jersey, where he was doing some work. What was done on that trip will appear more in detail in the summary of the testimony of Mr. Elmire. As a result of the second trip, Mr. Clutter signed the affidavit, Def. Ex. 113, and there was an agreement for the payment of compensation to him as provided in Def. Ex. 114 (the original) and Def. Ex. 98 (a carbon copy). A summary of the testimony of the above three witnesses will be given in the order in which such testimony appears in the record. The testimony of Mr. Clutter was taken by his second deposition at Lakewood, New Jersey, on the 21st day of October, 1930. Mr. Elmire and Mr. Downie testified in open court on the trial of this case.

SUMMARY OF SECOND DEPOSITION OF BERNARD CLUTTER TAKEN OCTOBER 1, 1930.

Mr. Clutter testified that Mr. Downie's first visit to him at Lakewood, New Jersey, was a voluntary one and Downie asked him to go outside of the house to talk over some private business; that Elmire stayed in the house; that he and Downie went out into the yard; that Downie informed him he wanted to talk over some business privately; that he did not want any one to know anything about it; that it was regarding the drop bottom ditcher scoop that Clutter had had out at Joplin, Missouri. He explained that the Keystone Company had had a patent on a drop bottom ditcher scoop, and that Clutter apparently had made, or had had made, the first one at Joplin, Missouri; and that he could cooperate with them in the protection of their patent. Clutter told him that if he first made the scoop it was his invention, and that he could not see where they had any right to the patent; but after considerable jarring Downie told him he did not have enough money to go into court to fight the Keystone Driller Company, and that that was a fact; that Downie said, if there had been a wrong done, "Let's get together and see if we cannot right the wrong"; and that Clutter asked him how that could be accomplished. Downie said he would sell him a new machine at half price. Clutter, realizing that this was the only opportunity he had to realize upon his invention, accepted the proposition. He asked Downie if he would go into the house and draw up a contract to that effect. Downie said, "No, not now." He said, "Now that is the ticklish part of this thing"; that it was a question as to whether there could be anything drawn up in writing that would be of any advantage, and that any papers showing a deal between them might serve to invalidate the patent. Downie said he would find out if there was any way they could hold him and see him later. They also told Clutter that he would have to "sign a statement in full for the machine" and that later a credit would be issued to him for his half interest; and that he would have trust entirely to Downie's honesty to carry out the deal. He asked Clutter not to say anything to Elmire or any one else as to what his business was down in Lakewood. He testified that Downie explained to him he was to cooperate by keeping absolutely quiet in regard to his part of the invention. The full price of the Keystone excavator,

including attachments, was $8200 (it was in fact $8,240. See Def. Ex. 96) and that Downie stated that they were going to start a suit or suits against infringers. Clutter testified that the machine received by him was receipted for by the Pennsylvania Railroad Company at Beaver Falls, March 12, 1925; and that he never received all of the scoops or attachments (see Def. Ex. 38).[3] Mr. Clutter testified that his recollection was that the second visit, when the affidavit was signed, was prior to the receipt of the machine by him. Upon his second trip Downie said: "They were going to tie me hand and foot if such a thing is possible." He testified he had no recollection of reading the papers; that he was not furnished a copy; that he had requested one but that Downie said they could not have any copies out, and that it was a question as to whether or not they could ever use the papers they had or not. Clutter further testified that later Downie saw him at Roseland, New Jersey, and informed him they would have to take the machine back unless he could raise a portion of the money to cover his arrearage; that he told Downie if he took the machine away from him it meant he would lose anything he might ever realize from the patent on the drop bottom ditcher scoop; that if he did take the machine away it was not going to do him any good; but that Downie informed him that he did not want him to feel that way about it; that Downie then offered to submit a cash instead of a credit proposition on the machine; that this proposition was to pay half of the amount of the "anticipated credit in cash"; that because of his failure to take all of the parts the purchase price was $3808; and that the final cash settlement was for one-half of the value of the machine or $476, which was the amount received by Clutter in partial settlement, as evidenced by Def. Ex. 108.

Clutter testified that in the summer of 1920 Mr. Oliver, then manager of the Joplin branch, told him that Downie had been working on a drop bottom scoop and "was filing for a patent on it, or taking out a patent." This was when Clutter told him of his intention to apply for a patent.

Clutter had left the employ of the Keystone Company at the time of the Joplin work. In the summer of

---

[3] As a result the parties finally dealt upon the basis of $7,616 as being the purchase price of the first Keystone excavator, and when a cash settlement was made in lieu of a credit upon the excavator, that figure was used. See Def. Exs. 107, 108, 38 and 111.

1920 he received an offer from the Keystone Company to go to Trinidad in the British West India Islands. He made a counter-offer, which was accepted. He remained there until some time in 1921. His duties were to set up and demonstrate an excavator, which the company had sold and delivered at that point.

SUMMARY OF TESTIMONY OF HOWARD H. ELMIRE.

Mr. Elmire was at all times an employee of the plaintiff company, and at the time that he accompanied Mr. Downie on trips to interview Mr. Clutter he lived at Arlington, New Jersey. As to the first conference his testimony is that he and Mr. Downie went to Mr. Clutter's home, and Mr. Downie said that he had some kind of deal on with Mr. Clutter; that their talk was general while Mr. Elmire was present; and that when they went to leave, Mr. Elmire went out and sat in his car which was parked at the curb, and Mr. Downie and Mr. Clutter stopped in the yard and stood there and talked three or four minutes. Mr. Elmire did not hear any of this conversation.

At the time of the second trip Downie and Elmire went to meet Clutter at Lawrence Harbor, where he was doing some road work. He was also doing work at Tom's River, on the road to Atlantic City, and at that place they went before a notary, who was also a garageman and acted as notary in the execution of automobile licenses and such like. Elmire testified that Clutter executed the affidavit and that they went from there to Lakewood, New Jersey, where they had dinner at a restaurant. After they left the restaurant Clutter stated that he had signed the affidavit that he had abandoned the experiment, and he thought that was sufficient to show that he had abandoned the experiment; and Mr. Downie said, in reference to the agreement: "Here, I will give this one to Elmire to hold and we can see it at any time." Nothing was said about the affidavit. Elmire took the copy of the agreement, Def. Ex. 114, and placed it in his safety deposit box and had it forwarded to him while he was at Beaver Falls, Pennsylvania, and produced it as an exhibit at the trial. Elmire also testified that Downie told Clutter that he had with him an affidavit which Clutter had agreed to sign on their first visit. He testified that the time intervening the first and second trips was "two or three weeks or so."

SUMMARY OF TESTIMONY OF REX R. DOWNIE.

Downie testified that he conceived Downie Patent 1,511,114 in the summer of 1920; that he advised his patent counsel at Washington, D. C., Mr. E. G. Siggers, of the fact in December of 1920; that he first learned of the work at Joplin, Missouri, through Mr. Lyle Hazen at a sales conference of the company at Beaver Falls, Pennsylvania, in January, 1921; and that he gave the details of his invention to his patent attorney about March, 1921. He denies that he had any knowledge of what transpired at Joplin prior to his own conception as embodied in his patent; and says that, while he may have seen Mr. Burn. R. Clutter between the years 1920 and 1925, he did not see him during that period after he learned of the Joplin work. He is uncertain as to whether or not he went to Lakewood, New Jersey, two or three times for the purpose of securing the affidavit, Def. Ex. 113. By his testimony he seeks to leave the impression that on a visit to Lakewood, New Jersey, prior to April 16, 1925, the date of the signing of the affidavit, Burn. Clutter either advised him that he had an application in the patent office or that he left that impression upon Downie; and that the consideration which had a possibility of amounting to one-half of $8240 was to cover two things; first, any patents which Clutter might secure; and second, a reduction to writing of what transpired at Joplin.

Downie testified that there was a private conversation between him and Clutter as testified to by Clutter, but he denies that at any time he enjoined secrecy upon Clutter or expected it of him. He testified that the affidavit was executed at the notary's office at Tom's River, New Jersey, where Clutter was also interested in or engaged in executing the necessary papers for the procurement of licenses for his White trucks. He claims the affidavit was read there by Clutter. Downie's idea was that the affidavit represented Clutter's own story as to what he did at Joplin. He states that he does not know whether the copy of Clutter's affidavit was retained by him. Downie's testimony as to why the agreements, Exs. Nos. 98 and 114, were not signed, is as follows: "Because at the time of the execution of the affidavit, I learned by direct questioning of Clutter and after having informed myself further from counsel as to the worth of what Clutter had; that is to say, Clutter then advised me point blank that he did not really have an applica-

tion in the patent office, and I had learned from counsel in the meantime that if he had not yet applied, he had no right to apply because the work had occurred too far before, and therefore there was no object from my view in having Clutter execute the agreement." And further: "In other words, there was no further consideration from Clutter coming to us; and it was all a matter of what we might owe Clutter on account of my original deal." He also testified that the consideration agreed to be paid Clutter was not paid for signing the affidavit,[3A] but "in consideration of his earlier promise that if he had any rights or came to have any out of that Joplin ditcher as inventor or co-inventor, he would make such rights over to the Keystone Company."

With reference to the statement of Herbert H. Wallower, Pl. Ex. 73, Downie testified he did not know who prepared it; he thinks either Brown Ransome or Mr. Wallower himself; and that the statement was procured by Mr. Ransome at the instance of the company. Ransome was acquainted with Wallower. He testified that Mr. Oliver was still living and was at the Joplin plant; and that Mr. Theodore Smith was still living and was with the company as treasurer at Beaver Falls.

Testimony and Exhibits Relating to the Purchase of Two Excavators.

The second excavator purchased was purchased about July 14, 1925. (See bill of lading, Def. Ex. 41, and 10th entry on Def. Ex. 93, in amount $7,150.) There is not much testimony concerning it except as it is referred to along with the first excavator in subsequent correspondence. (Beginning, Def. Ex. 104, January 9, 1928.)

The first excavator is first referred to in the correspondence in Def. Ex. 95, under date of February 11, 1925. In this letter it is said that,

> "Rex Downie states that he has not definitely decided upon the special considerations and the exact details, but he states that if you want to place

---

[3A] In a letter to Clutter under date of December 17, 1928, Def. Ex. 40, Downie said:

> "The consideration from you to us was that you conveyed to us whatever undetermined right you might have or might come to have arising out of your Joplin experiment; *also as a part of the consideration you made affidavit as to the abandonment of that experiment.*"

> your order for a shovel before he can reach a final conclusion that we are to take your order on the basis of an initial cash payment of $500, maximum time eighteen months for balance."

This was a letter addressed to Clutter by the Keystone Driller Company. It would indicate either that there was a conference prior to the time that Elmire and Downie went to Clutter's home at Lakewood, New Jersey, or that that meeting was held much earlier than the date indicated in the oral testimony, which places the conference at several weeks prior to the 16th day of April, 1926.[4]

The deal was afterwards made, and as it appears set out in the chattel mortgage, Def. Ex. 101, and bill receivable account, Pl. Ex. 74, was along the lines indicated in the letter just quoted, Def. Ex. 95. Clutter made a payment of $500, Def. Ex. 99, and the chattel mortgage calls for the payment of eighteen notes over a period of eighteen months, chattel mortgage Exhibit 101. It appears from Exhibit 96 that Clutter signed a contract lease on February 28, 1925; the invoice Exhibit 96 is dated March 9, 1925; and on the 16th day of March the Keystone Driller Company wrote Clutter a letter, Def. Ex. 37, with reference to these matters. Significantly, three of the exhibits bear date of April 14, 1925, two days before Clutter executed the affidavit at Tom's River, New Jersey, Exhibit 113. Under date of April 14 the bill receivable account, Ex. 74, was opened. Thus it appears that two days before the execution of the affidavit, Ex. 113, we have the execution of the receipt for $500, Ex. 99, the opening of the ledger account, Pl. Ex. 74, the execution of the same by Bernard Clutter, and the affidavit as to the amount due by Rex Downie. The bill receivable account sets out all of the notes referred to in the chattel mortgage (Exhibit 101) except the first note which was in the amount of $515, and which was due on the 14th of May. The evidence shows that this note was paid on May 23, 1925. The payment then having been overdue there was an interest charge of $2.58; a carbon

---

[4] Was it to Downie's interest to see Clutter at the earliest possible date after October 7, 1924, the date of the issuance of his patent? If he became antagonistic and belligerent, might he have filed an application which might have resulted in having an interference declared (48 *C. J.* 149, Note 85, and cases cited) which, even if unsuccessful, would have cast a cloud upon Downie's patent and have brought to light the Joplin work?

of the receipt issued to Clutter being Def. Ex. 100. As already indicated the cash payment required is covered by Def. Ex. 99, which is in the amount of $500, as shown by this carbon copy of the receipt. Under the same date also the chattel mortgage was signed and executed. It is altogether unlikely that Clutter met Downie who was at Beaver Falls upon the latter date, but that date is hand printed in the chattel mortgage, Def. Ex. 101. On the same day Rex Downie swore before a notary public at Beaver Falls, Pennsylvania, that there was due his company on this mortgage the amount of $7740. This of course covers all of the purchase price of the excavator except the first $500 cash payment, which is evidenced by Def. Ex. 99. It therefore includes the payment covered by Exhibit No. 100, and in addition seventeen notes in the amount of $425 each, the latter seventeen notes being the ones shown on the bill receivable account, Pl. Ex. 74. The bill receivable account, Pl. Ex. 74, shows that Clutter made three payments of notes, each in the amount of $425, as follows: June 26, 1925, March 19, 1926, and April 22, 1926. Thereafter there was some correspondence with reference to payments.

On March 16, the credit manager of the Keystone Driller Company wrote Clutter saying that the People's National Bank had returned Clutter's unpaid note dated April 14, with a statement that he was remitting direct.

The next exhibit, Def. 103, shows that on January 15 the credit manager wrote Clutter that he had cancelled four of his notes, due September, October, November and December of 1925, the amount in all being $1700. This item appears on the bill receivable account under date of December 31, 1926. It appears from the evidence that Clutter was relying upon this credit, and Downie testified that he made out a credit memorandum in favor of Clutter, but that through an oversight the treasurer, Smith, failed to enter the credit until the time indicated, December 31, 1925. Smith did not testify upon the subject. This seems to be the only credit entered on Clutter's account because of his agreement with Downie. As already seen, with the amount of the purchase price of the shovel reduced from $8240 to $7616, because Clutter did not take certain attachments, he was entitled to a credit of at least $1904 instead of $1700. This discrepancy is not explained in the evidence. The account is closed by an entry under date of August 11, 1927, and the journal, Pl. Ex. 75, shows that on that date Clutter's shovel was

sold to Harry Gotham for $4250. It is claimed from this entry that Clutter's shovel had been repossessed before the 11th day of August, 1927, and there is no evidence to the contrary.

Referring to Plaintiff's Exhibit No. 74, and summarizing, we find that Clutter made two cash payments, one of $500, Ex. 99, and one of $515, Ex. 100. He paid three of the notes, each in the amount of $425. He received a belated credit in the amount of $1700 on December 31, 1926. This left due on the plaintiff's books ten notes in the amount of $425, and the account was closed by the entry said to reflect the sale of the shovel.

New Agreement Before Shovels Had Been Repossessed.

Both shovels which were sold to Clutter having been repossessed before August 11, 1927, Pl. Ex. 75, which was before any testimony was taken before Judge Westenhaver on September 15, 1927, the wrongful tendency of the plaintiff's contract, Def. Ex. 98, had not been terminated. It appears from the correspondence that prior to repossessing the shovels Downie and Elmire must have had a conference with Clutter at which they agreed upon a cash basis for payment to Clutter and extended the time in which the contingency might happen to the end of 1928. This appears from Downie's memo. (back of first sheet of Def. Ex. 104)[5], from Clutter's letter, Def. Ex. 106, and Downie's letter, Def. Ex. 107. In the latter letter Downie refers to the fact that he had taken up the matter of an understanding (which was a new one) with Elmire, to ascertain whether his recollection and that of Elmire agreed. In Def. Ex. 107 there is a confirmation of what were apparently oral agreements that the time for the happening of the contingency should be extended to the end of the year 1928, and as an enclosure to that same letter Clutter received plaintiff's check in the amount of $476, Ex. 108, which he cashed.

It further appears from the correspondence, Def. Ex. 38, 110, 111 and 40, that a controversy arose between Downie and Clutter, Clutter claimed that he was entitled to more than the further sum of $476, which was the amount he had already received, Def. Ex. 108, and denied

---

[5] Downie testified that he made this lead pencil memorandum, but in his affidavit, Def. Ex. 129, he deposed as follows: "There was no other memorandum of agreement oral or written between Mr. Clutter and me or the Keystone Company regarding this matter."

that he had taken the check in part settlement of the controversy, Def. Ex. 110. Clutter was also asking payment of the amount due him before the end of the year 1928, and claimed that he was the original inventor of the device involved in the litigation. Def. Ex. 111, p. 2. Downie was insisting that whatever might later be due Clutter was not yet due; that the further amount which might later become due was only $476; and that there was due the Keystone Company on Clutter's parts account an amount in excess of that amount (Def. Ex. 94 shows $663.38) and therefore refused to make the payment.

There was no further correspondence until November 15, 1928, when Clutter wrote Def. Ex. 109 demanding his check for the balance. Further correspondence follows during November and December of 1928, Def. Ex. 38, 110, 39, 111 and 40, which shows that there was a controversy between the parties, not as to the extension of time for the contingency to happen, but as to the basis of the settlement. The result is that the contingent feature of the consideration to pass to Clutter was extended to the end of 1928. Judge Jones rendered his decision January 23, 1929; and a final decree was entered January 31, 1929. Mr. Fay, who was of counsel in the Byers case, testified that a person whom the parties believed to have been Clutter called him up shortly after the entry of the decree in the Byers case.

Thus it appears that as a result of the agreement, Def. Ex. 98, and the conduct of Downie with reference thereto, Clutter remained in a quiescent state until after the entry of the decree in the Byers case. No further correspondence between Downie and Clutter appears in evidence. Downie testified that he was present at the taking of the first Clutter deposition, and that Clutter wanted to have a conference with him after the taking of that deposition, but the conference did not materialize. Upon the cross examination of Clutter at the taking of his first deposition, none of the exhibits here involved were called to his attention except Def. Ex. 27, under date of February 20, 1926, which is an inquiry with reference to the use of side rake teeth in the Joplin experiment; and Clutter was asked on cross examination by plaintiff's counsel to identify his signature to an acknowledgment before a notary public on the 16th day of April, 1925. Reference was to the affidavit, Def. Ex. 113. Counsel at the time, as the record shows, refused to permit counsel for defendants to inspect the affidavit.

WAS THE TESTIMONY AS TO WHAT WAS DONE AT JOPLIN, MISSOURI, RELEVANT AND MATERIAL?

There would seem to be no real doubt that the testimony as to what happened at Joplin, Missouri, had unusual relevancy and materiality on the question of whether or not that work was an anticipation of Clutter's conception. That relevancy and materiality is emphasized when we consider some of the provisions of Clutter's affidavit, Def. Ex. 113, and what the Circuit Court of Appeals said in its opinion. Downie had investigated Clutter's work at Joplin, Missouri, both before he filed his application, during the time it was pending through his employees at Joplin, Missouri, and after the issuance of the patent. It is not clear whether he had on one of the reconstructed skimmer scoops or a precise reproduction thereof sent from Joplin, Missouri, to the company's plant at Beaver Falls, Pennsylvania. It must be assumed that he drew up the Clutter affidavit using the information which he had obtained. He describes two of the elements of the so-called abandoned experiment as follows: "(6) A scoop rigidly attached to the lower end of the ditcher stick having (7) a falling bottom pivoted to the side of the scoop at a point near the open end of the latter near the lower edge of the sides." The affidavit recites that the other elements, not here mentioned, were precisely the regular Keystone ditcher parts manufactured under Clutter Patent 1,317,431; and then states: "The new contrivance consisted in rigidly fastening a scoop body made after the pattern of the Keystone skimmer scoop to the lower end of the stick providing for discharge by the use of a pivoted bottom."

In *Byers Machine Co. v. Keystone Driller Company, supra,* the court states the elements of claim 6 of Downie's patent which the court states to be typical. Two of them are as follows:

> "(4) The scoop rigid and fixed throughout the cycle of operation;
>
> (6) The bottom pivoted to the sides of the scoop with its axis transverse to the scoop and adjacent to the mouth of the scoop."

To determine whether or not Clutter's work was an anticipation it is necessary to determine just how far there is patentable invention in Downie's first patent over Clutter's patent No. 1,317,431. Does the essence of any inventive step go beyond the above-quoted elements?

In oral argument plaintiff's counsel placed much stress upon the testimony of the defendants' expert witness, Ferris, who testified that it would have been necessary to make Bernard Clutter's Joplin reconstructed machine much stronger to perform the same functions as were performed by the machine constructed under Downie's patent. But in the patent law, contrary to natural law, the race is not always to him who can make strong, but to him who conceives, and the ultimate question on anticipation is: Did a machine constructed according to Clutter's conception as reduced to practice at Joplin, Missouri, anticipate that which is in essence the inventive step of Downie's second patent over Clutter's patent, No. 1,317,431? And was mere mechanical skill involved in making a stronger machine when it was sought to use an excavating machine in digging in rock and other hard materials? This kind of material could not be dug and the thought of doing so did not occur until the in-stroke machine had been contrived. It must of course be conceded that Clutter's machine was crude as compared with Downie's machine, as a finished product, which latter however may have resulted from mere mechanical skill over the crude device which grew out of Clutter's initial conception; but this difference is not serious, it seems, when conceptions and not machines are to be dealt with. The same argument was advanced in *Merit Oil Equipment Company v. Frey Equipment Corporation,* 48 F. (2d) 488, and at page 490 the court said:

> "It is contended that the device of the patent lacked utility, in that its first commercial embodiments were inefficient, but whether the defect was due to the type of pump used, as one witness testifies, or to some other detail, it is not inherent in the invention itself. It would indeed be strange if no change of detail were to result from commercial production, or if improvement in efficiency of organization or manufacture, without departure from the original concept of the inventor, were to destroy the patent."

Conclusions.

I have conceived it to be my duty to reconcile all the testimony with Downie's testimony, his affidavits filed in these cases December 31, 1930, one of which is Def. Ex. 129, and the arguments of his counsel, with the view of

reconciling the testimony upon the theory that what was done by Downie in his transactions with Clutter was innocent and innocuous. It seems to me that while many of his acts, taken singly, might be explained upon such a basis, the effect of all of them is to condemn his conduct as highly reprehensible.

Assuming Downie's explanation that he was paying the large consideration named for a supposed patent, a matter which I will consider more fully later on, one of the vices in his conduct lay in that, under the guise of buying such patent rights, he was also procuring from Clutter an affidavit, couched in Downie's language, and in wording which Clutter, being of the character which Downie has ascribed to him, would readily adopt to procure the tendered compensation of one-half of the value of an excavator which he had purchased. Clutter signed the affidavit without the advice of counsel and under circumstances where he could not properly know or appreciate its effect. There is no room for the claim that Downie had obtained on the previous visit any such detail as set out in the affidavit of Clutter's view of what had transpired at Joplin.

The use of the words "experimentation" and "abandoned" in the affidavit it seems to me were particularly reprehensible under the circumstances of this case. The intention was to have Clutter swear to a statement which amounted to his saying that what he had done at Joplin was an abandoned experiment, and such has been the claim throughout this case. The words "experimentation" and "abandoned" embody legal conclusions in the patent law, and it was for the courts to say, after all of the evidence on both sides had been submitted, whether or not the work at Joplin was a mere experiment or whether Clutter had reduced to practice the conception or part of it which was afterwards embodied as an element of Downie's patent; and it was at all times a fairly debatable question whether there had been, not an abandoned experiment, but an abandonment to the public of a conception which had been reduced to practice. One has but to examine casually such cases as *Bush v. Novelty Tufting Machine Co.* (C. C. A. 6), 151 Fed. 478; *Jones v. Sykes Metal Etc. Co.* (C. C. A. 6), 254 Fed. 91, 94; *Corona Cord Tire Company v. Dovan Chemical Corporation, supra,* to arrive at this conclusion. And there had been a use of sufficient length to determine that Clutter's rearrangement of the parts adapted from the skimmer scoop would obviate the difficulties which both he and

Downie attempted to overcome. *Austin Machine Co. v. Buckeye Ditcher Co.* (C. C. A. 6), 13 F. (2d) 698.

In addition, by making payment of part of the compensation contingent upon the successful outcome of Downie's infringement litigation, the clear tendency of the contract was to keep Clutter silent, or, if he testified, to make him a witness hostile to claimed defendant infringers. The tendency of this type of contract to accomplish this purpose has long been recognized in the law. 3 *Williston on Contracts,* Sections 1716 and 1729; 2 *Page on Contracts,* Section 927; 6 *Ruling Case Law,* 755; 13 *C. J.* 448, 449.

The view of the courts sufficiently appears from the case of *Hazelton v. Sheckells,* 202 U. S. 71, at p. 79, where Mr. Justice Holmes said:

> "The objection to them rests in their tendency, not in what was done in the particular case. Therefore a court will not be governed by the technical argument that when the offer became binding it was cut down to what was done and was harmless. The court will not inquire what was done. If that should be improper it probably would be hidden and would not appear. In its inception the offer, however, intended, necessarily invited and tended to induce improper solicitations, and it intensified the inducement by the contingency of the reward. *Marshall v. B. & O. R. R.,* 16 How. 314, 335, 336."

We are here of course not interested so much in the formality of the contract or its illegality; we are interested in the conduct of Downie over the entire period of time involved in this litigation and the contract is only an incident of this conduct. The cases are cited to show what the courts have regarded as the tendency of such a contract, and this record clearly shows that Downie's intent and purpose were to keep Clutter silent, or, in the alternative, to make him a hostile witness as to the claimed defendant infringers. There is no doubt that because of the signing of the contract and the offer of the consideration partly contingent upon the litigation, Clutter was kept in a quiescent state until after the decree had been entered in the Cleveland case, and all of Downie's acts and efforts were designed to bring about that result.

Downie's counsel argued that the amount of compensation resulted from the fact that Downie left the first conference with Clutter at Lakewood, New Jersey,

under the impression that Clutter had an application pending in the patent office; that this was responsible for the large amount which was paid to Clutter; that he made a definite agreement at that time; and that he regarded himself as morally and legally bound to carry out this original agreement even if, as he afterwards learned from Clutter, he had no application pending in the patent office. Any one who had heard Downie testify over a period of time as this court did would not come to the conclusion that he would buy a "pig in a poke" as his counsel argued to the court. And even if the situation were in fact as Downie testified he believed it to be, the taking of the affidavit as he did would have been a reprehensible act, a fraud upon the courts who might subsequently consider the matter, a fraud upon subsequent claimed defendant infringers and upon the public who had a right to the benefit of the patent if it had in fact been abandoned to the public.

But the facts are not as testified to by Downie, as the undisputed exhibits in the case produced by the plaintiff clearly show. The preliminary, secret conference at the time that Elmire went to Lakewood with Downie was held long before the date suggested in Elmire's testimony. It was had before February 11, 1925, which is the date of Def. Ex. No. 95. It appears from that exhibit that no definite agreement of any kind had been made by Downie, and that he so understood the situation. It is clear from the testimony that Clutter at all times relied upon Downie to fix the terms of the agreement, whether oral or written, and to carry them out, and this was the fact from the inception of the transaction.

In Exhibit 95, dated February 11, 1925, and which was after the first trip to Lakewood, New Jersey, when Clutter was visited at his home, the Keystone Driller Company wrote to Clutter:

> "We are just now in receipt of a letter from Rex Downie in which he states that he has not definitely decided on the special considerations and the exact details, but he states that if you want to place your order for the shovel before he can reach a final conclusion, that we are to take your order on the basis of initial cash payment of $500; maximum time of 18 months for the balance."

This letter shows that while it had been agreed that Clutter was to have a credit upon an excavator which he was to purchase, there was no definite agreement as to

terms. And it appears from the record that Downie wanted Clutter to purchase the shovel and execute certain papers before any definite agreement was made, to the end that the books of the Keystone Driller Company would not disclose or give a key to the transaction between Downie and Clutter.

As already indicated Clutter purchased the excavator on the basis suggested in the letter. He executed Def. Ex. 96, which was the lease contract; he executed eighteen promissory notes, one for $515, and seventeen for $425, each; he executed Def. Ex. 101, which was a chattel mortgage covering the excavator; and on the 14th of April, 1925, two days before the signing of the affidavit, Def. Ex. 113, the seventeen notes were entered upon the bill receivable ledger, Pl. Ex. 74; and on that date the blanks were filled in on the chattel mortgage above the signature of Clutter; and, more significantly, on that date Downie made oath to the chattel mortgage that there was due upon it the sum of $7,740. If, as Downie now testifies, an agreement had been made on the first trip to Lakewood, there would have been due to Clutter one-fourth of the purchase price of the excavator, and Downie could not have made oath that here was due $7,740, which was the amount of the entire purchase price of the excavator less the $500 cash payment. The memorandum, Def. Ex. 98, which is said to have embodied the earlier oral agreement contains the following:

> "2. In consideration of the above, The Keystone Driller Company hereby conveys to Bernard Clutter a one-fourth ownership in that certain Keystone excavator with equipment as furnished to him under contract lease dated February 28, 1925 (Pl. Ex. 96 is referred to)."

If an earlier agreement was made, as testified to by Downie, then Clutter was entitled to a credit of $500 which he had paid in cash, plus a further credit of $2,060, and the amount due upon the notes secured by the chattel mortgage upon the date when Downie made oath was not $7,740, but $4,680.

There is no suggestion in the agreement, such as is claimed in Downie's affidavit, Def. Ex. 129, that Clutter was to receive his credits against the last payments due upon the excavator. That the first payment was not to be against the final notes due appears by what subsequently happened when credits were allowed to Clutter. The collection department of the Keystone Driller Com-

pany was pressing him for the payment of three notes, Def. Ex. 102, March 16, 1926. Evasively he advised the New York office that he was remitting direct. The testimony is that Downie had given the treasurer, Smith, a memorandum covering Clutter's credit for one-fourth of the purchase price of the machine, that through some oversight the same was not entered upon the books, and that Downie seemed surprised when the matter was called to his attention.[6]

This explanation might be accepted except for other evidence in the case when Clutter's initial credit was actually entered upon the books. It was made in the amount only of $1700, which is the precise amount which would be due upon the four notes due just about the time of this entry, and four notes were cancelled and surrendered to him covering the months of September, October, November and December, 1926, the entry having been made, as already seen, as of December 31, 1926. In fact there was more due to Clutter than the amount of $1700. Taking the original purchase price, there was due him $2,060. Taking the purchase price less the attachments, which were not received by Clutter, there was due him the sum of $1904. There was method in not entering upon the books of the company this particular amount which might later suggest investigation which would uncover the Downie-Clutter transaction with reference to the excavator. Smith, the treasurer, did not testify upon this subject, although he was at the place of business of the Keystone Driller Company and was available.

It is further argued that it could not have been the deliberate purpose of Downie to make an agreement to suppress the testimony of Clutter or to put him in a state of mind where he would testify in favor of the Keystone Company and along the lines of his affidavit because it would have been futile to make such an agreement with Downie alone when many others knew the facts; and the record shows that at least seven depositions were taken of witnesses who observed Clutter's work at Joplin. The fact is, however, that very few, if any, of these witnesses would have been able to testify about the details which they did unless their memory had been first refreshed by Clutter, as the record shows it was; and if Clutter showed no interest in bringing forth this testi-

---

[6] The statement in Downie's affidavit, Def. Ex. 129, must be untrue, when he said: "Accordingly I made him a proposition to waive the *final* payments on such a machine."

mony, it would have been difficult to produce it from the other witnesses; and, more to the point, if there was any invention Clutter was the inventor, not Wallower or any one else, and Downie proceeded upon that theory. Whatever the witnesses observed and whatever they might be able to testify to, Clutter was the one man who could take the position and make an affidavit that the work at Joplin was an experiment and that it had been abandoned.

There is no issue here that Downie "surreptitiously or unjustly obtained a patent for that which was in fact invented by another who was using diligence in adapting and performing the same." R. S. 4920; 35 U. S. C. A. 69. But there is some evidence about what happened at Joplin which has a bearing upon the issue now under decision. *Holmes v. Goldsmith,* 147 U. S. 151, 164; *Williamson v. United States,* 207 U. S. 425, 450, 451.

Clutter testified that he told Oliver, then superintendent of the Joplin plant, in 1920, that he was about to apply for a patent, and that Oliver told him that Downie was working upon the same invention and had applied or was intending to apply for a patent and that the office did not know about it.

Shortly afterwards Clutter, who had left the employ of the Keystone Driller Company, was re-employed and sent to Trinidad, in the British West Indies.

Downie claims that he knew nothing of Clutter's work at Joplin until he was told by Hazen at a sales conference of the company at Beaver Falls, Pennsylvania; and counsel argue that the court is not entitled to draw any inference from the testimony to the effect that some one must have reported Clutter's work to the home office and that it must have come to the attention of Downie, from the failure of the plaintiff to call *all* of the persons who were then employees at the Joplin plant and who witnessed the excavating work at Joplin, Missouri; but it seems to this court that the fallacy of this position of plaintiff's counsel is that the one person who would have reported the matter directly to Downie, if it was so reported, was Oliver, if he in fact said what Clutter attributes to him. The record shows that Oliver is still in the employ of the plaintiff company at the Joplin plant. He was not called as a witness to deny Clutter's statement or to testify upon any subject, although he was available and Clutter's testimony was taken by depositions some time before the trial and the plaintiff was fully advised of Clutter's testimony and its import.

The further argument is advanced that Downie had no wrongful intent; that this is evidenced by the fact that after the signing of the affidavit, Def. Ex. 113, he assumed a dictatorial attitude toward Clutter in his dealings with him; and that if his intent had been to silence Clutter he would have assumed a more irenic attitude. If Downie did in fact assume such dictatorial attitude it seems to this court that this would be evidence in Downie's favor. It is necessary therefore to consider just what Downie did in his subsequent dealings with Clutter.

(a) It appears from the evidence that Downie left the first excavator purchased by Clutter in his possession until shortly prior to August 11, 1927. Pl. Ex. 75. Clutter had at that time paid on the excavator, the ultimate purchase price of which was $7,616, in cash only the sum of $2,290. Pl. Ex. 74. At the time of repossessing this excavator ten notes were overdue, the last one having been due December, 1926. Clutter of course had on December 31, 1926, received a credit of $1,700, representing part of the first instalment of the consideration which was due him. Thus it appears that Clutter had this excavator in his possession for a period of over two years, with only a cash payment of $2,290. It would seem that Downie was very lenient in this respect.

(b) Though the original agreement contemplated only credits upon the excavator purchased by Clutter, Downie before he repossessed the excavator made a new oral agreement with Clutter to pay him one-half of the balance of the contingent credit due him *in cash*, or the sum of $952. See Def. Ex. 104, Downie's memo. on the back of sheet 1; and Def. Ex. 107. This would seem to have been a fair agreement under the circumstances.

(c) According to the original agreement if the contingency with reference to the litigation did not occur on or before the 11th day of April, 1927, Clutter was entitled to no further payment. However Downie extended the time in which this contingency might occur to the end of the year 1928: Def. Ex. 107; Def. Ex. 38, third paragraph; Def. Ex. 39, next to the last paragraph.

(d) Although under no obligation to do so, Downie paid $476, or one-half of the substituted cash consideration, before the happening of the contingency. Def. Exs. 107 and 108.

(e) It appears from the evidence that since June 24, 1927, Clutter was indebted to the Keystone Company as

a balance on account in the amount of $663.38.[7] See Def. Exs. 94 and 38. No effort seems to have been made to collect this balance, and the company may also have absorbed a loss on the second excavator. Def. Ex. 109, third paragraph, last line.

All of these acts were in furtherance of the original wrongful purpose of the agreement between the parties. But from the point of view of Clutter—and with that alone we are here concerned—they were acts of benevolence.

It must also be noted that the record shows that Clutter reposed great confidence in Downie; that he always seemed to hope that Downie would assist him, even when Downie's letters indicated the contrary, and these letters sometimes contained gestures of friendship. Def. Ex. 38, last paragraph; Def. Ex. 110, next to the last paragraph. It must also be remembered that Clutter was impecunious and that the cash consideration of $952 and the last instalment of $476 were no insignificant amounts to him.

It is fair to say, however, that Downie seems to have dealt fairly with Clutter in money matters and that when he made an agreement he demanded its enforcement with business-like precision at the risk of antagonizing Clutter. His attitude in this respect may be explainable upon the theory that he thought that Clutter could do him no harm after he had signed the affidavit. However that may be, the firm attitude assumed by Downie is some evidence in his favor. It does not, however, to this court seem to be strong enough to overcome the other evidence which is clearly against him.

In my opinion no definite agreement, legal or moral, had been made with Clutter prior to April 16, 1925, when he signed the affidavit Def. Ex. 113, nor had it been agreed what Clutter was to sign, nor was Downie certain as to what he would in fact sign. The way had been prepared by having Clutter purchase the shovel, sign the contract lease, execute the chattel mortgage and the notes secured thereby, and Downie went to Lakewood hoping that Clutter would sign the affidavit, Ex. 113. From Downie's testimony it is fair to assume he believed that if Clutter made a written statement, and especially if he took oath thereto, he could not subsequently change his

---

[7] If we consider that $476 was still due to Clutter and that he failed to receive the full amount of the credit which he was entitled to on December 31, 1926, when he was credited for $1,700, when there was due him $1,904, the accounts nearly balance; and it thus appears that Clutter was paid in full even though the litigation was not decided within the contingency period.

story [8] and that the transaction would thereafter be regarded for all purposes as being truly and correctly reflected in his written statement.

The evidence also shows that Clutter from the beginning took the position that he was the inventor,—a position which he constantly maintained until December 13, 1928, when he wrote Def. Ex. 111, saying in part:

> "The fact of the matter is I am the original inventor. This I know, and it was also admitted by you in your voluntary act of coming to me for a settlement without my demand or request."

Downie's answer under date of December 17, 1928, Def. Ex. 40, does not touch upon this point. If Clutter had insisted upon his position and maintained that he was the inventor and had refused to sign the affidavit, doubtless Downie would have had to be satisfied and would have entered into the transaction upon the basis of the signing of the agreement. Def. Exs. 98 and 114. The affidavit and the agreement it seems to me proceeded upon contrary and inconsistent theories.

The intent and purpose prevading all of Downie's conduct in his transaction with Clutter was to keep him silent or, in the alternative, to place him in such a position that he would not be interested in taking, and would not take, a position as a witness hostile to Downie's interests which he had made his own.[9]

Was Any Fraud Sought to be Perpetrated Upon This Court in the Trial of These Cases?

Plaintiff's counsel, who have at all times had implicit confidence in Downie, and who do not agree with this court's analysis of the testimony, further urge that if there was any agreement or conduct on Downie's part, as I have already indicated, the force and effect of the

---

[8] In his affidavit, Def. Ex. 129, Downie said: "I was interested that the facts which he reported to me about the Joplin experiment and the Joplin work and which I reported to my patent lawyer should be preserved as I did not want him later to change his story."

[9] It is necessary to study the exhibits relating to this issue in their chronological order. So arranged as nearly as possible they are as follows: Def. 95, 96, 97, 37, 98, 114, 99; Pl. 74; Def. 101, 113; Pl. 73; Def. 100, 41, 27, 102, 103; Pl. 75; Def. 104, 105, 106, 107, 108, 109, 38, 110, 39, 111, 40; Pl. 45, 46; Def. 112, 129, 65; an undated ledger account Def. 93 and 94. The dates of the Cleveland case are as follows: December 22, 1926, bill of complaint filed; September 15, 1927, Judge Westenhaver began the taking of testimony; testimony completed September 19, 1927. Judge Westenhaver died about July 30, 1928, after an illness of several months. His successor took office December 28, 1928. Judge Jones rendered his decision January 23, 1929. A final decree was entered January 31, 1929.

same were spent in the Byers case; and that, in these cases, the court should disregard the acts and conduct of Downie, especially so when it comes to a consideration of the merits of these cases.

As already seen, after the conclusion of the Byers case Clutter communicated with Mr. Fay and perhaps others and offered to sell his testimony for a large sum of money. About this time also B. C. Clutter, a brother of Bernard R. Clutter, and George E. Wagner made propositions to the Keystone Driller Company which had a blackmailing aspect. Thereupon a meeting of all plaintiff's counsel was had at Beaver Falls, Pennsylvania, and letters were written to Wagner and B. C. Clutter. They are Pl. Exs. 45 and 46 and, while in a certain sense they are written for record purposes, we think counsel and the officials of the Keystone Company were in good faith when they said that they would offer or give nothing to conceal or suppress any evidence in these cases or in any other cases. From that point on, at least, this matter was in other hands than Downie's and I do not think that any one would impute an intention to plaintiff's counsel to suppress evidence in these cases.

Coming now to what transpired in these cases. The usual motion for a temporary injunction was filed, plaintiff's counsel at that time urging the binding effect of the Byers case as to the patents involved in that case. The application was opposed by defendants' counsel with a broad claim of new defenses and much new prior art. The court was then much impressed with the extent of these new defenses and the additional evidence as to the prior art. I denied the motion for a temporary injunction and allowed defendants to file a bond in lieu of granting the temporary injunction. No appeal was taken from this decision. In the circumstances I do not think that urging the binding effect of the decision in the Byers case was in any sense a fraud upon this court, even if there had been suppression in the Byers case of such a nature that this court should notice it as having a bearing when it comes to a decision of the merits of these cases. The matters relating to a preliminary injunction are a closed incident so far as the merits of the case are concerned.

Coming now to what transpired on the merits of the case. Clutter's first deposition was taken on February 24, 1930, and judging from the examination in chief defendants' counsel were not at that time apprised of the agreements which were afterwards produced in evidence.

A clew to them came because plaintiff's counsel asked questions with reference to Def. Ex. 27, a letter, and asked Clutter to identify his signature to the affidavit, Def. Ex. 113. The deposition leaves the impression that Clutter had not made up his mind at that time to testify concerning the agreement which he had with Downie. Thereafter, on the 21st day of October, 1930, the second Clutter deposition was taken. This covers Clutter's view with reference to the suppression of testimony; but the exhibits were not then available to defendants' counsel. December 15, 1930, defendants' counsel filed a motion to compel the production and to permit the inspection of documents relating to the alleged suppression of testimony. February 2, 1931, this court entered an order dismissing the motion without prejudice, it being agreed at that time by plaintiff's counsel that they would produce all of the documents at the trial, and that Mr. Downie, perhaps also Mr. Elmire, would be produced as witnesses. Upon the first day of the trial the documents were produced and the defendants' counsel had ample opportunity to examine them, but they stated that they were unable to procure Clutter's attendance as a witness at the trial, which of course was no fault of plaintiff's counsel. In these cases defendants' counsel had the testimony of Clutter when he was hostile to the plaintiff. They had all of the exhibits which have been commented upon herein and which tell the entire story with more accuracy than any witness who could testify with reference to them. There was in no sense a suppression of any evidence in these cases.

The position of plaintiff's counsel has been (a) that the testimony did not show any suppression of evidence in the Byers case; (b) that if the testimony in these cases showed an actual suppression of evidence in the Byers case, the court should still give to the decision in that case the full binding effect to which it was entitled because the evidence which was suppressed, if it was suppressed, related to an abandoned experiment.

This court had before it all of the facts, and in making the contentions which they did, it does not seem to this court that plaintiff's counsel exceeded the bounds of proper argument, and there was no fraud or suppression of evidence whatsoever in these cases. To hold that the plaintiff came into this court with unclean hands would be unwarranted. To use the language of another court when denying the application of another maxim: "To hold otherwise and to apply to this case the maxim

* * * would be to exercise rigor beyond the limits of wholesome severity." *Harvey v. Varner,* 98 Mass. 118, 123.

Having come to this conclusion it is unnecessary for this court to decide what should have been done or what might have been done in the Byers case, had the courts there had before them the facts which I have had before me in these cases; and it is not necessary to comment upon or to review the voluminous legal lore bearing upon the maxim which has been invoked.

In addition to the cases cited by counsel, I call their attention to the following, which seem to be in point: *Harton v. M'Kee,* 73 Fed. 556; and *Primeau v. Granfield,* 180 Fed. 847. In the latter case Judge Learned Hand said at page 180:

> "It is true that the law will enforce no part of a contract the performance of any stipulation of which is forbidden, but the parties do not become outlaws when they make such a contract, and their rights in equity as well as at law are the same as those of others, in so far as they do not require the enforcement of any part of the contract."

This case was reversed, 193 Fed. 911, and certiorari denied, 225 U. S. 708.

Professor John H. Wigmore, author of *Wigmore on Evidence,* has called my attention to 2 *Wigmore on Evidence,* Section 958; 4 *Wigmore on Evidence,* Section 2203, Note 6; *MaMath v. Hammond,* 55 Ga. 303; *Keown v. Verlin* (Mass.), 149 N. E. 116; and *Thatcher v. Darr,* 27 Wyo. 452, 199 Pac. 938.

Without deciding whether or not the Joplin work was an anticipation, I find and hold the first Downie patent, No. 1,511,114 to be valid and infringed.

These are the conclusions of this court if the decision in the Byers case stands. Much activity of counsel in the other cases indicates a probability that steps may be taken in the Byers case analogous to those which were taken in *Gairing Tool Co. v. Eclipse Interchangeable Counterbore Co.* (C. C. A. 6), 48 F. (2d) 73. No decree will be entered in this case at the present time. If within a reasonable time no steps are taken to set aside or modify the decision in the Byers case, an order may be entered in this case in accordance with this opinion. Costs are to be paid by the defendants.

GEO. P. HAHN,
District Judge.

June 22, 1931.

MOTION AND ORDER GRANTING PLAINTIFF LEAVE TO FILE CHART OF DOWNIE PATENT 1,709,466 AS PLAINTIFF'S EXHIBIT P-77.

(Filed June 26, 1931.)

[Case No. 964]

Now comes the plaintiff and moves this Honorable Court that the large wash drawing mailed to Toledo June 17, 1931 which illustrated the assembly of the plaintiff's bucket and stick depicting the structure of Downie Patent No. 1,709,466 may be and is hereby introduced and entered as Plaintiff's Exhibit P-77 in the above entitled cases.

Cleveland, Ohio
June 24, 1931.

RICHEY & WATTS,
Attorneys for Plaintiff.

It is so ordered June 26th, 1931.

GEO. P. HAHN,
United States District Judge.

REQUEST FOR FINDINGS OF FACT AND CONCLUSIONS OF LAW.

(Filed July 15, 1931.)

[Case No. 964]

Defendant requests that the Court enter in this case special findings of fact and conclusions of law in the form attached hereto.

EDWARD L. REED,
Solicitor.

Copy of this request with the enclosed findings of fact and conclusions of law attached thereto has been mailed this day to Richey & Watts, 1090 Union Trust Building, Cleveland, Ohio, Counsel for the plaintiff.

Dated July 14, 1931.

EDWARD L. REED.

FINDINGS OF FACT AND CONCLUSIONS OF LAW.

(Filed July 15, 1931.)

[Case No. 964]

This cause coming on to be heard at this term of Court, and upon pleadings and proofs presented, and the Court having heard the arguments of counsel and being fully advised, now makes the following Findings of Fact and Conclusions of Law:

FINDINGS OF FACT.

1. That Le Roy P. Clutter Patent, No. 1,317,431, dated September 30, 1919, having been held valid by the Circuit Court of Appeals of this Circuit, in *Byers Machine Company vs. Keystone Driller Company,* 44 F. 2d. 283, as to Claim Four (the claim in suit here), though new and impressive evidence has been offered in this case, it is deemed more fitting and proper by this Court that this new evidence and new arguments should be addressed to the Circuit Court of Appeals.

2. That Robert Rex Downie Patent, No. 1,511,114, dated October 7, 1924, is claimed to have been anticipated by the work of one Bernard R. Clutter done at Joplin, Missouri, in the fall of 1919 and the early months of the year 1920. As to whether or not this work anticipates the Downie Patent, the Court does not think it should determine for the same reason which it has given herein, in considering the Clutter patent, No. 1,317,431. New evidence is here presented as to this claimed anticipation. The new matter can be more properly and more fittingly presented to the Circuit Court of Appeals.

3. That Bernard R. Clutter, while working on the excavation of a cellar at Joplin, Missouri, in the latter part of the year 1919 and the early months of the year 1920, made and used an instroke ditcher with a drop bottom scoop, prior to any invention thereof by Robert Rex Downie, patentee of United States Letters Patent No. 1,511,114. The construction of this instroke ditcher with drop bottom scoop thereon is shown in Defendant's Exhibits, No. 26.

4. That the Keystone Driller Company had knowledge of this Bernard R. Clutter drop bottom instroke ditcher at the time it was made and used by Bernard R. Clutter at Joplin, Missouri, in the latter part of the year 1919 and the early months of the year 1920.

5. That Robert Rex Downie, patentee of Downie patent No. 1,511,114, had knowledge of this Bernard R. Clutter drop bottom instroke ditcher before he filed application for Downie patent No. 1,511,114, in suit.

6. That Downie patent No. 1,511,114 was assigned to the Plaintiff Company and issued on October 7, 1924. That upon issuance of this patent, the Plaintiff Company contemplated bringing suits against various alleged infringers. That having this purpose in mind, the Plaintiff Company, through its General Manager, Robert Rex Downie, voluntarily called upon Bernard R. Clutter at his home in Lakewood, New Jersey, in the latter part of the year 1924 or the early part of the year 1925. That the witnesses, Bernard R. Clutter and Robert Rex Downie, admit that the occasion for this visit was to discuss the public use by Bernard R. Clutter of his drop bottom instroke ditcher at Joplin, Missouri, in the latter part of the year 1919 and the early months of the year 1920.

7. That Bernard R. Clutter testified (and his testimony is supported by the documentary proofs), that Robert Rex Downie, during a visit to Lakewood, New Jersey, proposed to him that, as Keystone Driller Company were contemplating suits against infringers, they wanted Clutter to keep silent about his public use of the instroke ditcher with the drop bottom at Joplin, Missouri, and that, in consideration of his agreeing to do this, the Plaintiff Company would deliver to him a Keystone Excavator valued at $8,240, and credit him with a sum equal to one-half (½) the purchase price of said machine, one-quarter (¼) credit to be given him upon delivery of the machine and one-quarter credit upon the successful termination of the litigation then in contemplation.

8. That Bernard R. Clutter accepted the proposition and delivery of the Keystone Excavator was made by the Plaintiff Company. The suits contemplated by the Plaintiff Company were filed and the first of the credits promised Bernard R. Clutter for his silence was issued to him. During the pendency of these suits Bernard R. Clutter and the plaintiff Company had a disagreement about back payments due upon this Excavator. The plaintiff Company then agreed that, if it should repossess the machine, then in lieu of the second merchandise credit previously promised him, it would allow him a cash credit of $1,904. Clutter agreed to this and part of the cash credit, namely, $476, was actually paid Clutter. Clutter pressed Keystone for the balance of this cash amount but

Keystone, through its General Manager, Robert Rex Downie, kept putting him off until the litigation then pending against the Byers Company at Cleveland, Ohio, was decided in favor of the Keystone Driller Company.

9. That this suit was filed February 9, 1929, and plaintiff came into this Court urging the binding effect against this Defendant of the decision rendered in the Byers case, obtained by fraud and suppression of evidence.

10. That this suit was filed February 9, 1929, and that plaintiff came into this Court asserting that Robert Rex Downie was the first, true and original inventor of Downie patent No. 1,511,114, in suit while it had in its files information and then had knowledge that the true inventor was Bernard R. Clutter and had, previous to and at the time of filing this suit, a corrupt agreement with Bernard R. Clutter to suppress the true facts as to the inventorship of said alleged invention.

11. That, at the time of filing this suit and thereafter plaintiff knew Downie patent No. 1,511,114 to be invalid in view of the public use by Bernard R. Clutter at Joplin, Missouri, in the latter part of the year 1919 and the early months of the year 1920.

12. That alleged letters of repudiation written to Wagner and B. C. Clutter on April 12, 1929 (Plaintiff's Exhibits 45 and 46) were written and forwarded several months after this suit was filed and that said letters were never called to Defendant's attention or knowledge until a year and ten months after this suit was filed, and not until defendant, without knowledge of these letters, had, by its own efforts, uncovered the attempted fraud and suppression attempted to be perpetrated by plaintiff upon this defendant.

13. That said alleged letters of repudiation (Plaintiff's Exhibits 45 and 46) were not constructive notice to this defendant, and that so far as this defendant was concerned, the attempted fraud and suppression of evidence were effective against this defendant until uncovered by defendant's own efforts.

CONCLUSIONS OF LAW.

1. That the plaintiff, Keystone Driller Company, is by assignment the lawful owner of Letters Patent of the United States, as follows, to-wit:

Le Roy P. Clutter Patent, No. 1,317,431, dated September 30, 1919, for Ditching or Excavating Machine;

Robert Rex Downie Patent, No. 1,511,114, dated October 7, 1924, for Excavating Machine;

Robert Rex Downie Patent, No. 1,543,250, dated June 23, 1925, for Excavating Machine;

Robert Rex Downie Patent, No. 1,709,466, dated April 16, 1929, for Ditcher Scoop Assembly;

Robert Rex Downie Patent, No. 1,716,432, dated June 11, 1929, for Excavating Scoops.

2. Clutter Patent No. 1,317,431, dated September 30, 1919, is held to be valid and infringed as to Claim 4.

3. The first Downie patent No. 1,511,114, dated October 7, 1924, is held to be valid and infringed as to Claims 6 to 14, both inclusive.

4. That Robert Rex Downie Patent No. 1,543,250, dated June 23, 1925, is good and valid in law as construed by this Court as to Claims 1, 2, 3, 4, 5, 5, 6, 9 and 10, but Claims 1, 2, 3, 4, 5, 6, 9 and 10 are not infringed by defendant's structure, and the charge of infringement relative thereto is hereby dismissed.

5. That Robert Rex Downie Patent, No. 1,709,466, dated April 16, 1929, is lacking in patentable invention as to Claims 1, 2, 8, 10, 11, 12, 13, 15 and 19 thereof; that if there is patentable invention in the Claims 1, 2, 8, 10, 11, 12, 13, 15 and 19 of said Letters Patent No. 1,709,466, Defendant's machine does not infringe said Claims.

6. That Robert Rex Downie Patent, No. 1,716,432, dated June 11, 1929, is good and valid in law as construed by this Court as to claims 1, 14, 16 and 18, and said claims 1, 14, 16 and 18 are infringed by the side rake tooth shown in defendant's physical Exhibit No. 82.

7. That the intent and purpose pervading all of Downie's conduct in his transactions with Bernard R. Clutter as set forth above in the Findings of Fact was to keep Clutter silent, or in the alternative, to make him a hostile witness as to the claimed defendant infringers. There is no doubt that, because of the signing of the contract and the offer of the consideration partly contingent upon the litigation, Clutter was kept in a quiescent state until after the decree had been entered in the case of Keystone Driller Company v. Byers Machine Company, in the United States District Court for the Northern District of Ohio, Eastern Division, at Cleveland, Ohio, herein sometimes referred to as the Cleveland case or as the Byers case, and all of Downie's acts and efforts were designed to bring about that result.

8. That there was no fraud or suppression of evidence by plaintiff in this case.

9. That the plaintiff, through its General Manager, Downie, suppressed the evidence of the Bernard R. Clutter's Joplin public use of the instroke ditching machine with the drop bottom scoop, during the trial of the Cleveland case against the Byers Company, and at the same time this suit was filed, such suppression was still effective.

10. That the conduct of the plaintiff Company, through its General Manager, Downie, in making a corrupt agreement with Bernard R. Clutter for the suppression of the Bernard R. Clutter evidence of the Joplin public use of the instroke ditcher having a drop bottom, while still effective when this suit was filed, does not constitute unclean hands in this suit to bar the Plaintiff from equitable relief.

11. That the plaintiff is not guilty of unclean hands in this suit by reason of its agreement with Bernard R. Clutter to suppress evidence.

12. That all of the evidence relative to the work of Bernard R. Clutter at Joplin, Missouri, in the latter part of the year 1919 and the early months of the year 1920 in making and using the instroke ditcher machine having a drop bottom bucket, is very material and relevant to this case, and that Robert Rex Downie, when General Manager of the plaintiff Company, made agreements whose tendency was to suppress this evidence, and by his acts and conduct intended to and did suppress evidence relating to the Joplin work of Clutter.

13. That the Court declines to hold what effect this suppression of evidence had on the Byers case in the District Court and in the Circuit Court of Appeals.

14. That the Court declines to hold that because of the suppression of evidence in the Byers case, this Court should not consider the Byers case as having any binding effect in this case.

Entered this .... day of July, 1931.

.....

United States District Judge.

INTERLOCUTORY DECREE.

(Filed July 21, 1931.)

[Case No. 964]

This cause coming on to be heard at this term of Court, and upon pleadings and proofs presented and arguments by both parties, the court having filed its opinion which sufficiently finds the facts and the law, and thereupon, upon consideration thereof, it is Ordered, Adjudged and Decreed as follows:

(1) That Letters Patent of the United States to LeRoy P. Clutter, No. 1,317,431, dated September 30, 1919, for Ditching or Excavating Machine, is good and valid in law as to claim 4 thereof; that the inventor, LeRoy P. Clutter, named in the said patent, was the first, true and original inventor of the inventions, improvements and combinations described in said claim 4; and that the Plaintiff, the Keystone Driller Company, is the lawful owner of the entire right, title and interest in and to said inventions and in and to the Letters Patent therefor, as aforesaid;

That Letters Patent of the United States to Robert Rex Downie, No. 1,511,114, dated October 7, 1924, for Excavating Machine, is good and valid in law as to claims 6 to 14, both inclusive; that the inventor, Robert Rex Downie, named in the said patent, was the first, true and original inventor of the inventions, improvements and combinations described in said claims 6 to 14, both inclusive, thereof, and that the Plaintiff, the Keystone Driller Company, is the lawful owner of the entire right, title and interest in and to said inventions and in and to the said Letters Patent therefor, as aforesaid;

That Letters Patent of the United States to Robert Rex Downie, No. 1,543,250, dated June 23, 1925, for Excavating Machine, is good and valid in law as to claims 1, 2, 3, 4, 5, 6, 9 and 10; that the inventor, Robert Rex Downie, was the first, true and original inventor of said inventions, improvements and combinations described in said claims 1, 2, 3, 4, 5, 6, 9 and 10 of said patent, and that the Plaintiff, the Keystone Driller Company, is the lawful owner of the entire right, title and interest in and to said inventions and in and to said Letters Patent therefor, as aforesaid; that the structure of the Defendant's machine does not infringe claims 1 to 6 inclusive and 9 and 10 of said patent;

That Letters Patent of the United States No. 1,709,466, dated April 16, 1929, to Robert Rex Downie, for Ditcher Scoop Assembly, lacked patentable invention as to claims 1, 2, 8, 10, 11, 12, 13, 15 and 19 thereof; that if there is patentable invention in said Letters Patent No. 1,709,466 as to claims 1, 2, 8, 10, 11, 12, 13, 15 and 19 the structure of Defendant's machine illustrated in Defendant's Exhibit 81 would not infringe said claims of said patent.

That Letters Patent of the United States No. 1,716,432, dated June 11, 1929, for Excavating Scoop, is good and valid in law as to claims 1, 14, 16 and 18 thereof; that the inventor, Robert Rex Downie, named in said patent, was the first, true and original inventor of the inventions, improvements and combinations described in said claims 1, 14, 16 and 18 of said patent, and that the Plaintiff, the Keystone Driller Company, is the lawful owner of the entire right, title and interest in and to said inventions and in and to the Letters Patent therefor, as aforesaid.

(2) That the Defendant, The General Excavator Company, has infringed upon said Letters Patent to Clutter, No. 1,317,431, Downie, No. 1,511,114 and Downie, No. 1,716,432 within the Northern District of Ohio, Western Division, and elsewhere in the United States, by the manufacture, sale and/or use of Ditching or Excavating Machines, employing or embodying the inventions set forth in certain of said patents and particularly upon claim 4 of patent No. 1,317,431, by the manufacture, sale and/or use of machines illustrated in Plaintiff's Exhibit P-25, Bulletin 2805 on page 2, center view; page 9, top and lower right-hand cuts; pages 10 and 11, lower right-hand and central views; page 19, right-hand cuts; Photographs A, B, C, D, E, and I of Plaintiff's Exhibit P-27; Photographs K and L of Plaintiff's Exhibit P-28; and Excavating Machines employing and embodying the inventions set forth in patent No. 1,511,114 and particularly upon claims 6 to 14, both inclusive, thereof, by the manufacture, sale and/or use of machines and/or apparatus illustrated in Plaintiff's Exhibit P-25, Bulletin 2805 on page 2, center view and page 9, top and lower right-hand cuts; Plaintiff's Exhibit P-27, Photographs A, B, C, F, G and I; Plaintiff's Exhibit P-28, Photographs L and M, and Excavating Scoops employing and embodying the inventions set forth in patent No.

1,716,432 and particularly upon claims 1, 14, 16 and 18 thereof, by the manufacture, sale and/or use of apparatus illustrated in Plaintiff's Exhibit P-27, Photographs A, B, C, F, G and I and Plaintiff's Exhibit P-28, Photographs L, R and S.

(3) That the Plaintiff do recover from the Defendant, The General Excavator Company, all profits, gains and advantages which the Defendant has or shall have derived, received or made by reason of said infringement and that the Plaintiff do recover from said Defendant, any and all damages which the Plaintiff has sustained or shall sustain by reason of said infringement by said Defendant.

(4) That this cause be, and the same is hereby referred to J. W. Wilson, Esq., a Master, to ascertain the amount of such gains and profits and the amount of damages sustained by the said Plaintiff by reason of such infringement; that the Defendant file its account with said Master in accordance with the Rules of Equity of the Supreme Court of the United States relevant thereto; that on such accounting the Plaintiff shall have the right to cause an examination of the officers, servants, agents and employees of said Defendant, orally or otherwise, and also to cause the production of the Defendant's books, vouchers, accounts, bills of lading, shop orders and all documents relating to the manufacture of ditchers and parts thereof by Defendant, and that said Defendant, through its representatives, attend for such purpose before the Master from time to time as the said Master shall direct, and that all testimony and exhibits offered and used in this cause on behalf of either party may be referred to and used in such accounting.

(5) That an injunction be issued out of and under the seal of this Court, directed to the Defendant, The General Excavator Company, its officers, servants, agents, employees, workmen and all their privies, and each and every one of them, enjoining and restraining them during the remainder of the respective terms of said Letters Patent Nos. 1,317,431, 1,511,114, and 1,716,432 from directly or indirectly constructing or causing to be constructed and/or using and/or selling or causing to be used or sold or advertising for sale, Ditching or Excavating Machines, employing or embodying the inventions set forth in certain of said patents and particularly upon claim 4 of patent No. 1,317,431, by the manufacture, sale and/or use of machines like apparatus illus-

trated in Plaintiff's Exhibit P-25, Bulletin 2805 on page 2, center view; page 9, top and lower right-hand cuts; pages 10 and 11, lower right-hand and central views; page 19, right-hand cut, Photographs A, B, C, D, E and I of Plaintiff's Exhibit P-27; Photographs K and L of Plaintiff's Exhibit P-28, and Excavating Machines employing and embodying the inventions set forth in Patent No. 1,511,114 and particularly upon claims 6 to 14, both inclusive, thereof, by the manufacture, sale and/or use of machines like apparatus illustrated in Plaintiff's Exhibit P-25, Bulletin 2805 on page 2, center view; page 9, top and lower right-hand cuts; pages 10 and 11, lower right-hand and central views; page 19, right-hand cut; Photographs A, B, C, D, E and I of Plaintiff's Exhibit P-27; Photographs K and L of Plaintiff's Exhibit P-28, and Excavating Machines employing and embodying the inventions set forth in Patent No. 1,511,114 and particularly upon claims 6 to 14, both inclusive, thereof, by the manufacture, sale and/or use of machines like apparatus illustrated in Plaintiff's Exhibit P-25, Bulletin 2805 on page 2, center view, and page 9 top and lower right-hand cuts; Plaintiff's Exhibit P-27, Photographs A, B, C, D, G and I; Plaintiff's Exhibit P-28, Photographs L and M, and Excavating Scoops employing and embodying the inventions set forth in patent No. 1,716,433, and particularly upon claims 1, 14, 16 and 18 thereof, by the manufacture, sale and/or use of devices like apparatus illustrated in Plaintiff's Exhibit P-27, Photographs A, B, C, F, G and I, and Plaintiff's Exhibit P-28, Photographs L, R and S, or apparatus, article, devices, ditching or excavating machines or excavating scoops to be used or capable only of use in a combination infringing any of said patents, and from infringing and contributing to infringement upon or violating any of said Letters Patent in any way whatsoever.

(6) The injunction and accounting herein ordered be suspended for ten (10) days from this date in order that Defendant may perfect its appeal. In view of the contemplated appeal the supersedeas bond is hereby fixed at $7500.00 with sureties and conditions to be approved by the judge who allows the appeal.

(7) That Plaintiff recover from the Defendant the Plaintiff's full cost in this suit to be taxed and to have execution therefor.

Entered this 21st day of July, 1931.

GEO. P. HAHN,
United States District Judge.

PETITION FOR APPEAL.

(Filed July 28, 1931.)

[Case No. 964]

The above named defendant, The General Excavator Company, feeling aggrieved by the decree rendered and entered in the above entitled cause on the 21st day of July, A. D. 1931, does hereby appeal from said decree to the Circuit Court of Appeals for the Sixth Circuit for the reasons set forth in the assignment of errors filed herewith, and it prays that its appeal be allowed and that citation be issued as provided by law, and that a transcript of the record, proceedings and documents upon which said decree was based, duly authenticated be sent to the United States Circuit Court of Appeals for the Sixth Circuit, under the rules of such court in such cases made and provided.

And your petitioner desires said appeal shall operate as a supersedeas, and therefore prays that an order be made fixing the amount of security which said defendant shall give and furnish upon such appeal, and that upon giving such security all further proceedings in this court be suspended and stayed until the determination of said appeal by the Circuit Court of Appeals for the Sixth Circuit.

EDWARD L. REED,
Attorney for Defendant.

Dated July 28th, 1931.

ASSIGNMENT OF ERRORS.

(Filed July 28, 1931.)

[Case No. 964]

Now comes the defendant, The General Excavator Company, and presents, with its accompanying petition for appeal from the decree entered herein, the following assignment of errors:

1. That the Court erred in finding that Letters Patent No. 1,317,431 to Clutter are good and valid in law as to claim 4 thereof.

2. That the Court erred in finding that the defendant, The General Excavator Company, had infringed claim 4 of patent No. 1,317,431 to Clutter.

3. That the Court erred in following the decision of the Circuit Court of Appeals in The Byers Machine Co. vs. Keystone Driller Co., 44 Fed. 2nd. 283, as to validity of claim 4 of Letters Patent No. 1,317,431 to Clutter.

4. That the Court erred in not finding that the additional evidence in the instant case was such in character and amount as to carry conviction that the Court of Appeals would have reached a different conclusion as to the validity of claim 4 of patent No. 1,317,431 to Clutter if said evidence had been before that court in the case of The Byers Machine Co. vs. The Keystone Driller Company.

5. That the Court erred in not finding that the Daniel H. Mahoney machine used at Vincennes, Indiana, and Gorham, Illinois, in 1913, was a complete anticipation of claim 4 of the Clutter patent No. 1,317,431.

6. That the Court erred in finding Letters Patent No. 1,511,114 to Downie good and valid in law as to claims 6 to 14, both inclusive.

7. That the Court erred in finding that the defendant, The General Excavator Company, had infringed claims 6 to 14, both inclusive of Letters Patent No. 1,511,114 to Downie.

8. That the Court erred in following the decision of the Circuit Court of Appeals in The Byers Machine Co. vs. The Keystone Driller Company as to the validity of claims 6 to 14 of Letters Patent No. 1,511,114 to Downie.

9. That the Court erred in not finding that the additional evidence in the instant case is such in character and amount as to carry conviction that the Circuit Court of Appeals would have reached a different conclusion as to the validity of claims 6 to 14, both inclusive, of patent No. 1,511,114 to Downie, if said additional evidence had been before that court in The Byers Machine Co. vs. The Keystone Driller Co.

10. That the Court erred in not finding that the drop bottom excavating scoop used at Joplin, Missouri, by Bernard R. Clutter was a complete anticipation of claims 6 to 14, both inclusive, of Letters Patents No. 1,511,114 to Downie.

11. That the Court erred in not finding that the plaintiff came into this Court with unclean hands by reason of the suppression of testimony by the plaintiff in the case of The Byers Machine Co. vs. The Keystone Driller Co., and the attempted suppression of evidence by the plaintiff in the instant case.

12. That the Court erred in not finding that by reason of the suppression of evidence by the plaintiff in the case of The Byers Machine Co. vs. The Keystone Driller Company, the decision of the Court of Appeals in that case was without effect and was not binding on this Court in the instant case.

13. That the Court erred in finding that Letters Patent No. 1,543,250 to Downie was good and valid in law as to claims 1, 2, 3, 4, 5, 6, 9 and 10.

14. That the Court erred in finding that Letters Patent No. 1,716,432 to Downie was good and valid in law as to claims 1, 14, 16 and 18.

15. That the Court erred in finding that the Defendant, The General Excavator Company, had infringed claims 1, 14, 16 and 18 of Letters Patent No. 1,716,432 to Downie.

16. That the Court erred in that it awarded a permanent injunction enjoining defendant, The General Excavator Company, its officers, servants, agents, employees, workmen and all their privies from constructing or causing to be constructed, and/or using, and/or selling, and/or causing to be used or sold, or advertising for sale, machines embodying the invention of claim 4 of the Clutter patent No. 1,317,431, of claims 4 to 16, both inclusive, of Downie patent No. 1,511,114, and claims 1, 14, 16 and 18, of Downie patent No. 1,716,432.

17. That the Court erred in finding that the plaintiff should recover from the defendant, The General Excavator Company, all profits, gains and advantages which the defendant has, or shall have derived, by reason of infringement by said defendant of claim 4 of the Clutter patent No. 1,317,431, claims 6 to 14 of the Downie patent No. 1,511,114, and claims 1, 14, 16 and 18 of the Downie patent No. 1,716,432, and any and all damages which the plaintiff has sustained or shall sustain by reason of such alleged infringement.

18. That the Court erred in appointing a Master to take an account of the gains and profits which have

accrued to the defendant and the damages suffered by the plaintiff on account of said infringement.

19. That the Court erred in that it did not dismiss the bill of complaint.

WHEREFORE, the defendant prays that said decree may be reversed.

THE GENERAL EXCAVATOR COMPANY,
By EDWARD L. REED,
Solicitor for Defendant.

ORDER ALLOWING APPEAL AND GRANTING SUPERSEDEAS.

(Entered July 29, 1931 by Paul Jones, Judge.)

[Case No. 964.]

The petition of The General Excavator Company, defendant in the above entitled cause, for an appeal from the decree is hereby granted and the appeal is allowed; and upon petitioner filing a bond in the sum of Seven Thousand Five Hundred ($7,500.00) Dollars with sufficient sureties, and conditioned as required by law, the same shall operate as a supersedeas of the decree made and entered in the above cause, and shall suspend and stay the injunction and accounting and all further proceedings in this Court until the termination of said appeal by the Circuit Court of Appeals for the Sixth Circuit.

Dated 29th day of July, 1931.

PAUL JONES,
United States District Judge.

SUPERSEDEAS BOND ON APPEAL.

(Filed July 29, 1931.)

[Case No. 964]

UNITED STATES OF AMERICA,
NORTHERN DISTRICT OF OHIO,
WESTERN DIVISION, SS:

KNOW ALL MEN BY THESE PRESENTS, that we, The General Excavator Company, of Marion, in the County of Marion, and State of Ohio, as principal, and the United States Fidelity & Guaranty Company of the City of Baltimore and State of Maryland, as surety, are held and firmly bound unto The Keystone Driller Company in the sum of Seventy-five Hundred ($7,500.00) Dollars, lawful money of the United States, to be paid to said The Keystone Driller Company, its successors or assigns; to which payment, well and truly to be made, we bind ourselves and each of us, jointly and severally, and each of our successors and assigns, by these presents.

Sealed with our seals and dated this 28th day of July, 1931.

WHEREAS, lately, at a term of the United States District Court for the Northern District of Ohio, Western Division, in a suit pending in said Court, between The Keystone Driller Company, Plaintiff, and The General Excavator Company, Defendant, a decree was entered and the said The General Excavator Company has obtained an order of said Court allowing an appeal to reverse portions of the aforesaid decree, and a citation directed to said The Keystone Driller Company citing and admonishing it to be and appear in the United States Circuit Court of Appeals for the 6th Circuit at the City of Cincinnati, Ohio,

Now the condition of the above obligation is such, that if the said The General Excavator Company shall prosecute said appeal to effect, and pay all costs and damages if it fail to make good its plea, then this obligation to be void. Otherwise the same shall be and remain in full force and effect.

THE GENERAL EXCAVATOR COMPANY,
By M. C. MCNEIL,
Secretary.

UNITED STATES FIDELITY & GUARANTY CO.,
By LOUIS H. PAINE,
Attorney in Fact (Seal)

Approved this 29th day of July, 1931, and when filed will operate as a supersedeas.

PAUL JONES,
United States District Judge

CITATION ON APPEAL.

(Filed July 29, 1931.)

[Case No. 964]

UNITED STATES CIRCUIT COURT OF APPEALS
FOR THE SIXTH CIRCUIT.

To Keystone Driller Company, Greeting:

You are hereby cited and admonished to be and appear at a session of the United States Circuit Court of Appeals for the Sixth Circuit, to be holden at the City of Cincinnati, in said circuit, on the *28th day of August, 1931, next, pursuant to an order allowing an appeal filed in the Clerk's office of the District Court of the United States for the Northern District of Ohio, wherein The General Excavator Company is appellant and you are appellee to show cause, if any there be, why the decree rendered against the said appellant as in the said appeal mentioned, should not be corrected, and why speedy justice should not be done to the parties in that behalf.

WITNESS, the Honorable CHARLES EVANS HUGHES, Chief Justice of the United States, this 29th day of July in the year of our Lord one thousand nine hundred and thirty-one and of the Independence of the United States of America the one hundred and fifty-sixth.

PAUL JONES,
Judge of the District Court.

*Not exceeding 30 days from day of signing.

Service of the above citation is hereby acknowledged and appearance of appellee is hereby entered.

July 29, 1931. RICHEY & WATTS.

PETITION FOR CROSS-APPEAL.

(Filed Aug. 7, 1931.)

[Case No. 964]

To the Honorable, the Judges of the District Court of the United States for the Northern District of Ohio, Western Division:

Your petitioner, the Keystone Driller Company, Plaintiff in the above entitled cause, respectfully shows that The General Excavator Company, Defendant in the above entitled cause, has been allowed, by the Honorable Judge Paul Jones, an appeal from the decree made on the 21st day of July, 1931, in this cause, and your petitioner also considers himself aggrieved by said decree, and, therefore, petitioner prays for allowance of a cross-appeal from said decree to the Circuit Court of Appeals for the Sixth Circuit, for reasons stated in the Assignment of Errors, filed herewith; that said defendant prays that this cross-appeal may be allowed; that citation may be granted to the above named defendant commanding it to appear before the said Circuit Court of Appeals; and that a transcript of the record, proceedings and papers upon which said order was based, duly authenticated, may be sent to the United States Court of Appeals for the Sixth Circuit.

RICHEY & WATTS,

Dated August 7, 1931. *Attorneys for Plaintiff.*

ASSIGNMENT OF ERRORS ON CROSS-APPEAL.

(Filed Aug. 7, 1931.)

[Case No. 964]

Now comes the Plaintiff, Keystone Driller Company, by Richey & Watts, its attorneys, and having prayed for a cross-appeal to the United States Circuit Court of Appeals for the Sixth Circuit from the decree made and entered in this cause on the 21st day of July, 1931, says that said decree is erroneous and unjust and against the rights of the said Plaintiff, and presents the following Assignment of Errors:

1. The Court erred in holding that the structure of the Defendant's machine does not infringe each and all of the claims 1 to 6 and 9 and 10 of Letters Patent of the United States to Robert Rex Downie, No. 1,543,250, dated June 23, 1925.

2. The Court erred in holding that United States Letters Patent to Robert Rex Downie, No. 1,709,466, dated April 16, 1929, lacked patentable invention as to claims 1, 2, 8, 10, 11, 12, 13, 15 and 19 thereof.

3. The Court erred in holding that if there is patentable invention in claims 1, 2, 8, 10, 11, 12, 13, 15 and 19 in United States Letters Patent to Robert Rex Downie, No. 1,709,466, dated April 16, 1929, the structure of the Defendant's machine did not infringe each and all of said claims of said patent.

4. The Court erred in failing to grant all the relief prayed for in the Bill of Complaint.

5. The Court erred in failing to grant all the relief prayed for in the Supplemental Bill of Complaint.

6. The Court erred in that it did not enter a decree finding that Letters Patent of the United States No. 1,709,466, dated April 16, 1929, is valid as to each and all of the claims 1, 2, 8, 10, 11, 12, 13, 15 and 19 thereof.

7. The Court erred in that it did not enter a decree finding that Letters Patent of the United States to Robert Rex Downie, No. 1,709,466, dated April 16, 1929, as to each and all of the claims 1, 2, 8, 10, 11, 12, 13, 15 and 19 had been infringed by the Defendant.

8. The Court erred in that it did not enter a decree for an injunction restraining the Defendant from infringement of said Letters Patent No. 1,709,466.

9. The Court erred in that it did not enter a decree awarding Plaintiff an accounting for profits and damages by reason of said infringement by Defendant of said Letters Patent No. 1,709,466.

10. The Court erred in that it did not enter a decree finding that Letters Patent No. 1,543,250 as to each and all claims 1 to 6 and 9 and 10 thereof had been infringed by the Defendant.

11. The Court erred in that it did not enter a decree for an injunction restraining the Defendant from infringement of Letters Patent No. 1,543,250.

12. The Court erred in that it did not enter a decree awarding Plaintiff an accounting for profits and damages by reason of the infringement by the Defendant of said Letters Patent No. 1,543,250.

13. The other errors manifest and apparent upon the record.

WHEREFORE, Plaintiff prays that the part of the decree complained of may be reversed and for such other and further relief as to the Court may seem just and proper.

RICHEY & WATTS,
Attorneys for Plaintiff.

August 7, 1931.

ORDER ALLOWING CROSS-APPEAL.

(Entered Aug. 10, 1931 by Paul Jones, Judge.)

[Case No. 964]

The General Excavator Company, Defendant in the above entitled cause, having been allowed an appeal by the Honorable Judge Paul Jones, dated July 29, 1931, from the decree made on the 21st day of July, 1931, in this cause; and,

On petition of Plaintiff, Keystone Driller Company, by its attorneys duly filed, it is ordered that a Cross-Appeal to the United States Circuit Court of Appeals for the Sixth Circuit from the said decree, heretofore filed and entered in this cause on the 21st day of July, 1931, be and the same is hereby allowed; that citation be issued directed to the above named defendant commanding it to appear before the said Circuit Court of Appeals; and that a certified transcript of the record in accordance with the

Rules of Practice for Courts of Equity of the United States be transmitted to the said United States Circuit Court of Appeals for the Sixth Circuit.

And it is further ordered that the cost bond on the cross appeal be fixed in the sum of $250.00.

PAUL JONES,
United States District Judge.

Dated: August 10th, 1931.

BOND ON CROSS-APPEAL.

(Filed August 13, 1931.)

[Case No. 964]

Know all men by these presents, that we, the Keystone Driller Company, as principal, and American Surety Co. of New York, as surety, are held and firmly bound unto The General Excavator Company in the full and just sum of Two Hundred and Fifty ($250) Dollars to be paid to the said The General Excavator Company, its successors or assigns, to which payment, well and truly to be made, we bind ourselves, our successors and assigns, jointly and severally by these presents.

Sealed with our seals, and dated this 11 day of August, 1931. Whereas, lately, at a regular term of the District Court of the United States for the Northern District of Ohio, Western Division, in a suit depending in said Court between Keystone Driller Company, plaintiff, and The General Excavator Company, defendant, a decree was rendered in part against the said The Keystone Driller Company and the said The Keystone Driller Company having obtained a cross-appeal and filed a copy thereof in the Clerk's Office of said Court to reverse that portion of the decree in the aforesaid suit, and a citation has been issued, directed to the said The General Excava-

tor Company citing and admonishing it to appear in the United States Circuit Court of Appeals for the Sixth Circuit at Cincinnati, Ohio, thirty days from and after the date of such citation.

Now, the condition of the above obligation is such, that if the said The Keystone Driller Company shall prosecute said cross-appeal to effect, and answer all costs for this said cross-appeal if it fails to make good its plea, then the above obligation to be void, else to remain in full force and effect.

KEYSTONE DRILLER COMPANY,
By RICHEY & WATTS,
Attys. for Plaintiff.

AMERICAN SURETY COMPANY OF NEW YORK,
EDW. F. ARCHER,
Resident Vice President.

Attest:

R. M. WILL,
Resident Assistant Secretary.

(Seal)

The within bond is hereby approved this 12th day of August, 1931, and when filed, will operate as a supersedeas.

PAUL JONES,
United States District Judge.

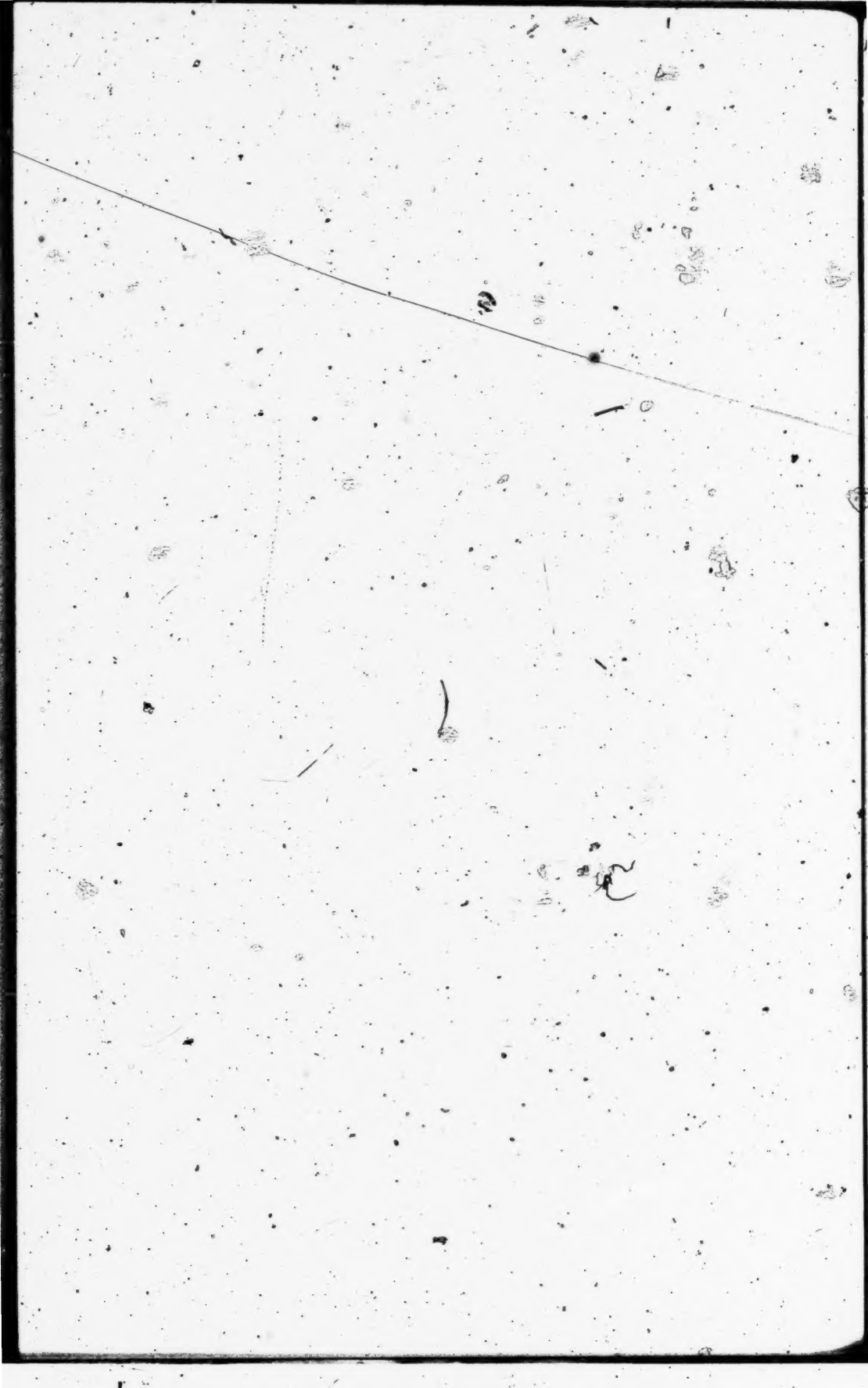

CITATION ON CROSS-APPEAL.

(Filed Aug. 14, 1931.)

[Case No. 964]

UNITED STATES CIRCUIT COURT OF APPEALS
FOR THE SIXTH CIRCUIT.

To The General Excavator Company—Greeting:

You are hereby cited and admonished to be and appear at a session of the United States Circuit Court of Appeals for the Sixth Circuit, to be holden at the City of Cincinnati, in said Circuit, on the* 9th day of September next, pursuant to an appeal filed in the Clerk's office of the District Court of the United States for the Northern District of Ohio, wherein Keystone Driller Company is appellant and you are appellee to show cause, if any there be, why the decree rendered against the said appellant as in the said petition for appeal mentioned, should not be corrected, and why speedy justice should not be done to the parties in that behalf.

Witness the Honorable Charles Evans Hughes, Chief Justice of the United States, this 10th day of August in the year of our Lord one thousand nine hundred and thirty-one and of the Independence of the United States of America the one hundred and fifty-sixth.

PAUL JONES,
Judge of the District Court.

* Not exceeding 30 days from day of signing.

Service of the above citation is hereby acknowledged and appearance of appellee is hereby entered.

EDWARD L. REED.

August 10th, 1931.

ORDER EXTENDING TIME WITHIN WHICH TO LODGE NARRATIVE FORM OF TESTIMONY.

(Entered Aug. 22, 1931 by Paul Jones, Judge.)

[Case No. 964]

For good cause shown, it is ordered that the time for lodging the narrative form of testimony in the above entitled cause, be extended to and including September 15, 1931.

PAUL JONES,

United States District Judge.

August 22nd, 1931.

ORDER EXTENDING TIME FOR FILING TRANSCRIPT OF RECORD.

(Entered Aug. 22, 1931 by Paul Jones, Judge.)

[Case No. 964]

For good cause shown, it is ordered that the time for filing the transcript of record in the United States Circuit Court of Appeals for the Sixth Circuit, in the above-entitled case, be extended to and including September 28, 1931.

PAUL JONES,

United States District Judge.

Dated: August 22nd, 1931.

MOTION TO EXTEND TIME TO FILE TRANSCRIPT OF RECORD.

(Filed Sept. 24, 1931.)

[Case No. 964]

Now comes the Defendant, by its Attorneys, and prays that the time for filing the transcript of record in the United States Circuit Court of Appeals for the

Sixth Circuit, in the above-entitled cause, be extended to and including October 28, 1931.

In support of this motion, the Affidavit of Edward L. Reed is hereto annexed and made part hereof as Exhibit A.

EDWARD L. REED,
Attorney for Defendant.

Sept. 22, 1931.

Notice.

Messrs. Richey & Watts,
Attorneys for Plaintiff,
1090 Union Trust Building,
Cleveland, Ohio.

Gentlemen:

Please take notice that the above Motion will be presented to his Honor, Judge Jones, in the Court Room, Federal Building, Cleveland, Ohio, on the 24th day of September, 1931, at 9 o'clock, A. M., or as soon thereafter as Counsel may be heard.

EDWARD L. REED,
Attorney for Defendant.

A copy of the above-entitled Motion, Notice and Affidavit were today mailed to Messrs. Richey & Watts, Attorneys for the Plaintiff, 1090 Union Trust Building, Cleveland, Ohio.

EDWARD L. REED,
Attorney for Defendant.

September 22, 1931.

AFFIDAVIT OF EDWARD L. REED.

(Filed Sept. 24, 1931.)

[Case No. 964]

Edward L. Reed, being first duly sworn, deposes and says that he is Attorney for Defendant in the above-entitled cause; that on July 29, 1931, this Court granted an Appeal in the above-entitled cause; that the return day of the Citation issued herein has been extended by

Court Order until the 28th day of September, 1931; that the trial in the above-entitled cause lasted several weeks; that, consequently, the record in the cause is voluminous; that in addition to the evidence taken in Court, there were some fifty depositions offered in evidence; that diligent effort has been made to complete the preparation of this record for Appeal; that the Narrative Statement of Testimony under Equity Rule 75 has been filed as well as Defendant's Praecipe for Transcript; that under the Rules, approval of Defendant's Narrative Form of Testimony can not be had until September 25, 1931, and that if approved on that date it would be a physical impossibility to print the record before September 28, 1931; that the additional time requested is therefore necessary in order to print the record on appeal.

EDWARD L. REED.

Subscribed and sworn to before me, a notary public, this 22nd day of September, 1931.

MATTHEW SIEBLER,

(Seal) MATTHEW SIEBLER, *Notary Public*
In and for Montgomery County, Ohio.

My Commission Expires July 23, 1934.

ORDER EXTENDING TIME FOR FILING TRANSCRIPT OF RECORD.

(Entered Sept. 24, 1931 by Paul Jones, Judge.)

[Case No. 964]

For good cause shown, it is ordered that Defendant's time for filing the transcript of record in the United States Circuit Court of Appeals for the Sixth Circuit, in the above-entitled cause, be extended to and including October 28, 1931.

JONES,
United States District Judge.

Dated: September 24th, 1931.

MOTION FOR PROMPT ENTRY OF DECREE.

(Filed June 25, 1931.)

[Case No. 965]

Now comes the Plaintiff and moves the Court for a prompt entry of the attached Decree for the following reasons:

(1) The Decree conforms to the decision of this Court handed down on June 22, 1931.

(2) This litigation has been pending since 1926. This particular suit has been pending since the first of 1929. The litigation should be on its way. It can not go on forever.

(3) The Court has found that Mr. Downie's practice regarding certain matters was "highly reprehensible" which, of course, reflects upon Mr. Downie's character and he is entitled to a review of this Court's view on this subject promptly. This is a matter of personal privilege with him and nothing should interfere with or delay his right to an early review.

(4) There is no question regarding the validity and the infringement of the Clutter patent, in any event, and there is no reason why the entry of this decree should be withheld because of any questions which might be undeterminated regarding any of the other patents. The validity of the Clutter patent was again upheld by Judge Jones in the Day & Maddock case.

(5) The Petition for Leave to File Bill of Review in the Byers Case should not deter the entry of this decree for the reason that such must necessarily be denied since proceedings by Bill of Review is not the proper proceeding in the Byers Case. (*Central California Canners,* 282 Fed. 406 (C. C. A. 9th); *Simmons vs. Grier,* 258 U. S. 82; *National Brake vs. Christenson,* 278 Fed. 490 (C. C. A. 7th) and, second, because even if it is referred to Judge Jones, it must be denied by him since in the Day & Maddock Judge Jones has already three times refused the Plaintiff the right to take these proofs. There is no reason for his changing his mind on the fourth effort.

(6) Judge Jones has, with knowledge of the alleged new evidence in the instant cases and the charges of

suppression, fraud, and the furor about the same, held the first Downie patent valid again.

RICHEY & WATTS,
Attorneys for Plaintiff.

Cleveland, Ohio,
June 24, 1931.

It is so ordered.

.....,

June .., 1931. *United States District Judge.*

REQUEST FOR FINDINGS OF FACT AND CONCLUSIONS OF LAW.

(Filed June 11, 1931.)

[Case No. 965]

Defendant requests that the Court enter in this case special findings of fact and conclusions of law in the form attached hereto.

WILLIAMS, EVERSMAN & MORGAN,
Solicitors.

CORBETT & MAHONEY,
Of Counsel.

Copy of this request with the enclosed findings of fact and conclusions of law attached thereto has been mailed this day to Richey & Watts, 1090 Union Trust Building, Cleveland, Ohio, Counsel for the Plaintiff.

LLOYD I. WILLIAMS.

Dated July 11, 1931.

FINDINGS OF FACT AND CONCLUSIONS OF LAW.

(Filed June 11, 1931.)

[Case No. 965]

This cause coming on to be heard at this term of Court, and upon pleadings and proofs presented, and the Court having heard the arguments of counsel and being fully advised, now makes the following Findings of Fact and Conclusions of Law:

FINDINGS OF FACT.

1. That Le Roy P. Clutter Patent, No. 1,317,431, dated September 30, 1919, having been held valid by the Circuit Court of Appeals of this Circuit, in Byers Machine Company vs. Keystone Driller Company, 44 F. 2d, 283, as to Claim Four, (the claim in suit here) though new and impressive evidence has been offered in this case, it is deemed more fitting and proper by this Court that this new evidence and new arguments should be addressed to the Circuit Court of Appeals.

2. That Robert Rex Downie Patent, No. 1,511,114, dated October 7, 1924, is claimed to have been anticipated by the work of one Bernard R. Clutter done at Joplin, Missouri in the fall of 1919 and the early months of the year 1920. As to whether or not this work anticipates the Downie Patent, the Court does not think it should determine for the same reason which it has given herein, in considering the Clutter Patent, No. 1,317,431. New evidence is here presented as to this claimed anticipation. The new matter can be more properly and more fittingly presented to the Circuit Court of Appeals.

3. That Bernard R. Clutter, while working on the excavation of a cellar at Joplin, Missouri, in the latter part of the year 1919 and the early months of the year 1920, made and used an instroke ditcher with a drop bottom scoop, prior to any invention thereof by Robert Rex Downie, patentee of United States Letters Patent No. 1,511,114. The construction of this instroke ditcher with drop bottom scoop thereon is shown in Defendant's Exhibit, No. 26.

4. That the Keystone Driller Company had knowledge of this Bernard R. Clutter drop bottom instroke ditcher at the time it was made and used by Bernard R. Clutter at Joplin, Missouri, in the latter part of the year 1919 and the early months of the year 1920.

5. That Robert Rex Downie, patentee of Downie Patent No. 1,511,114, had knowledge of this Bernard R. Clutter drop bottom instroke ditcher before he filed application for Downie Patent No. 1,511,114, in suit.

6. That Downie Patent No. 1,511,114 was assigned to the Plaintiff Company and issued on October 7, 1924. That upon issuance of this patent, the Plaintiff Company contemplated bringing suits against various alleged infringers. That having this purpose in mind, the Plaintiff Company, through its General Manager, Robert Rex Downie, voluntarily called upon Bernard R. Clutter at his home in Lakewood, New Jersey, in the latter part of the year 1924 or the early part of the year 1925. That the witnesses, Bernard R. Clutter and Robert Rex Downie, admit that the occasion for this visit was to discuss the public use by Bernard R. Clutter of his drop bottom instroke ditcher at Joplin, Missouri, in the latter part of the year 1919 and the early months of the year 1920.

7. That Bernard R. Clutter testified, (and his testimony is supported by the documentary proofs) that Robert Rex Downie, during a visit to Lakewood, New Jersey, proposed to him that, as Keystone Driller Company were contemplating suits against infringers, they wanted Clutter to keep silent about his public use of the instroke ditcher with the drop bottom at Joplin, Missouri, and that, in consideration of his agreeing to do this, the Plaintiff Company would deliver to him a Keystone Excavator valued at $8,240, and credit him with a sum equal to one-half (1/2) the purchase price of said machine, one-quarter (1/4) credit to be given him upon delivery of the machine and one-quarter credit upon the successful termination of the litigation then in contemplation.

8. That Bernard R. Clutter accepted the proposition and delivery of the Keystone Excavator which was made by the Plaintiff Company. The suits contemplated by the Plaintiff Company were filed and the first of the credits promised Bernard R. Clutter for his silence was issued to him. During the pendency of these suits Bernard R. Clutter and the Plaintiff Company had a disagreement about back payments due upon this Excavator. The Plaintiff Company then agreed that, if it should repossess the machine, then in lieu of the second merchandise credit previously promised him, it would allow him a cash credit of $1,904. Clutter agreed to this and part of the cash credit, namely, $476, was actually paid

Clutter. Clutter pressed Keystone for the balance of this cash amount but Keystone, through its General Manager, Robert Rex Downie, kept putting him off until the litigation then pending against the Byers Company at Cleveland, Ohio, was decided in favor of the Keystone Driller Company.

9. That this suit was filed February 9, 1929, and Plaintiff came into this Court urging the binding effect against this Defendant of the decision rendered in the Byers case, obtained by fraud and suppression of evidence.

10. That this suit was filed February 9, 1929, and that Plaintiff came into this Court asserting that Robert Rex Downie was the first, true and original inventor of Downie Patent No. 1,511,114, in suit while it had in its files information and then had knowledge that the true inventor was Bernard R. Clutter and had, previous to and at the time of filing this suit, a corrupt agreement with Bernard R. Clutter to suppress the true facts as to the inventorship of said alleged invention.

11. That, at the time of filing this suit and thereafter, Plaintiff knew Downie Patent No. 1,511,114 to be invalid in view of the public use by Bernard R. Clutter at Joplin, Missouri, in the latter part of the year 1919 and the early months of the year 1920.

12. That alleged letters of repudiation written to Wagner and B. C. Clutter on April 12, 1929 (Plaintiff's Exhibits 45 and 46) were written and forwarded several months after this suit was filed and that said letters were never called to Defendant's attention or knowledge until a year and ten months after this suit was filed, and not until Defendant, without knowledge of these letters, had, by its own efforts, uncovered the attempted fraud and suppression attempted to be perpetrated by Plaintiff upon this Defendant.

13. That said alleged letters of repudiation (Plaintiff's Exhibits 45 and 46) were not constructive notice to this Defendant, and that so far as this Defendant was concerned, the attempted fraud and suppression of evidence were effective against this Defendant until uncovered by Defendant's own efforts.

CONCLUSIONS OF LAW.

1. That the Plaintiff, Keystone Driller Company, is by assignment the lawful owner of Letters Patent of the United States, as follows, to-wit:

Le Roy P. Clutter Patent, No. 1,317,431, dated September 30, 1919, for Ditching or Excavating Machine;

Robert Rex Downie Patent, No. 1,511,114, dated October 7, 1924, for Excavating Machine;

Robert Rex Downie Patent, No. 1,543,250, dated June 23, 1925, for Excavating Machine;

Robert Rex Downie Patent, No. 1,709,466, dated April 16, 1929, for Ditcher Scoop Assembly.

2. Clutter Patent No. 1,317,431, dated September 30, 1919, is held to be valid and infringed as to Claim 4.

3. The first Downie Patent No. 1,511,114, dated October 7, 1924, is held to be valid and infringed as to Claims 6 to 14, both inclusive.

4. That Robert Rex Downie Patent No. 1,543,250, dated June 23, 1925, is good and valid in law as construed by this Court as to Claims 1, 2, 3, 4, 5, 6, 9 and 10, but Claims 1, 2, 3, 4, 5, 6, 9 and 10 are not infringed by Defendant's structure, and the charge of infringement relative thereto is hereby dismissed.

5. That Robert Rex Downie Patent No. 1,709,466, dated April 16, 1929, is lacking in patentable invention as to Claims 1, 2, 8, 10, 11, 12, 13, 15 and 19 thereof; that if there is patentable invention in the Claims 1, 2, 8, 10, 11, 12, 13, 15 and 19 of said Letters Patent No. 1,709,466, Defendant's machine does not infringe said Claims.

6. That the intent and purpose pervading all of Downie's conduct in his transactions with Bernard R. Clutter as set forth above in the Findings of Fact was to keep Clutter silent, or in the alternative, to make him a hostile witness as to the claimed Defendant infringers. There is no doubt that, because of the signing of the contract and the offer of the consideration partly contingent upon the litigation, Clutter was kept in a quiescent state until after the decree had been entered in the case of Keystone Driller Company vs. Byers Machine Company, in the United States District Court for the Northern District of Ohio, Eastern Division, at Cleveland, Ohio, herein sometimes referred to as the Cleveland case or as the Byers case, and all of Downie's acts and efforts were designed to bring about that result.

7. That there was no fraud or suppression of evidence by Plaintiff in this case.

8. That the Plaintiff, through its General Manager, Downie, suppressed the evidence of the Bernard R. Clutter's Joplin public use of the instroke ditching machine with the drop bottom scoop, during the trial of the Cleveland case against the Byers Company, and at the time this suit was filed, such suppression was still effective.

9. That the conduct of the Plaintiff Company, through its General Manager, Downie, in making a corrupt agreement with Bernard R. Clutter for the suppression of the Bernard R. Clutter evidence of the Joplin public use of the instroke ditcher having a drop bottom, while still effective when this suit was filed, does not constitute unclean hands in this suit to bar the Plaintiff from equitable relief.

10. That the Plaintiff is not guilty of unclean hands in this suit by reason of its agreement with Bernard R. Clutter to suppress evidence.

11. That all of the evidence relative to the work of Bernard R. Clutter at Joplin, Missouri, in the latter part of the year 1919 and the early months of the year 1920 in making and using the instroke ditcher machine having a drop bottom bucket, is very material and relevant to this case, and that Robert Rex Downie, when General Manager of the Plaintiff Company, made agreements whose tendency was to suppress this evidence, and by his acts and conduct intended to and did suppress evidence relating to the Joplin work of Clutter.

12. That the Court declines to hold what effect this suppression of evidence had on the Byers case in the District Court and in the Circuit Court of Appeals.

13. That the Court declines to hold that because of the suppression of evidence in the Byers case, this Court should not consider the Byers case as having any binding effect in this case.

Entered this .... day of July, 1931.

....,

United States District Judge.

INTERLOCUTORY DECREE.

(Filed July 21, 1931.)

[Case No. 965]

This cause coming on to be heard at this term of Court, and upon pleadings and proofs presented and arguments by both parties, the court having filed its opinion which sufficiently finds the facts and the law, and thereupon, upon consideration thereof, it is Ordered, Adjudged and Decreed as follows:

(1) That Letters Patent of the United States to LeRoy P. Clutter, No. 1,317,431, dated September 30, 1919, for Ditching or Excavating Machine, is good and valid in law as to claim 4 thereof; that the inventor, LeRoy P. Clutter, named in the said patent, was the first, true and original inventor of the inventions, improvements and combinations described in said claim 4; and that the Plaintiff, the Keystone Driller Company, is the lawful owner of the entire right, title and interest in and to said inventions and in and to the Letters Patent therefor, as aforesaid;

That Letters Patent of the United States to Robert Rex Downie, No. 1,511,114, dated October 7, 1924, for Excavating Machine, is good and valid in law as to claims 6 to 14, both inclusive; that the inventor, Robert Rex Downie, named in the said patent, was the first, true and original inventor of the inventions, improvements and combinations described in said claims 6 to 14, both inclusive, thereof, and that the Plaintiff, the Keystone Driller Company, is the lawful owner of the entire right, title and interest in and to said inventions and in and to the said Letters Patent therefor, as aforesaid;

That Letters Patent of the United States to Robert Rex Downie, No. 1,543,250, dated June 23, 1925, for Excavating Machine, is good and valid in law as to claims 1, 2, 3, 4, 5, 6, 9 and 10; that the inventor, Robert Rex Downie, was the first, true and original inventor of said inventions, improvements and combinations described in said claims 1, 2, 3, 4, 5, 6, 9 and 10 of said patent, and that the Plaintiff, the Keystone Driller Company, is the lawful owner of the entire right, title and interest in and to said inventions and in and to said Letters Patent therefor, as aforesaid; that the structure of the Defendant's machine does not infringe claims 1 to 6 inclusive and 9 and 10 of said patent;

That Letters Patent of the United States to Robert Rex Downie, No. 1,709,466, dated April 16, 1929, for Ditcher Scoop Assembly, lacked patentable invention as to claims 1, 2, 8, 10, 11, 12, 13, 15 and 19 thereof; that if there is patentable invention in said Letters Patent No. 1,709,466 as to claims 1, 2, 8, 10, 11, 12, 13, 15 and 19, the structure of Defendant's machine illustrated in Defendant's Exhibit No. 91 would not infringe said claims of said patent.

(2) That the Defendant, The Osgood Company, has infringed upon said Letters Patent to Clutter No. 1,317,431 and Downie No. 1,511,114 within the Northern District of Ohio, Western Division, and elsewhere in the United States, by the manufacture, sale and/or use of Ditching or Excavating Machines, employing or embodying the inventions set forth in certain of said patents and particularly upon claim 4 of patent No. 1,317,431, by the manufacture, sale and/or use of machines illustrated on pages 20, 21 and upper right hand view on page 23, Bulletin 2620, Exhibits 3 and 8 marked "attached to Plaintiff's Interrogatories" and Exhibit 9 marked "Entered Downie's Reply Affidavit," of Plaintiff's Exhibit P-29, Photographs K, F, and G of Plaintiff's Exhibit P-31 and in Plaintiff's Exhibit P-70, and upon claims 6 to 14, both inclusive, of patent No. 1,511,114, by the manufacture, sale and/or use of the machine illustrated on pages 20, 21, Bulletin 2620, Exhibit 3, marked "attached to Plaintiff's Interrogatories" of Plaintiff's Exhibit P-29, Photographs K, J, P and Q of Plaintiff's Exhibit P-31 and Plaintiff's Exhibit P-70.

(3) That the Plaintiff do recover from the Defendant, The Osgood Company, all profits, gains and advantages which the Defendant has or shall have derived, received or made by reason of said infringement and that the Plaintiff do recover from said Defendant, any and all damages which the Plaintiff has sustained or shall sustain by reason of said infringement by said Defendant.

(4) That this cause be, and the same is hereby referred to J. W. Wilson, Esq., a Master, to ascertain the amount of such gains and profits and the amount of damages sustained by the said Plaintiff by reason of such infringement; that the Defendant file its account with said Master in accordance with the Rules of Equity of the Supreme Court of the United States relevant thereto; that on such accounting the Plaintiff shall have the

right to cause an examination of the officers, servants, agents and employees of said Defendant, orally or otherwise, and also to cause the production of the Defendant's books, vouchers, accounts, bills of lading, shop orders and all documents relating to the manufacture of ditchers and parts thereof by Defendant, and that said Defendant, through its representatives, attend for such purpose before the Master from time to time as the said Master shall direct, and that all testimony and exhibits offered and used in this cause on behalf of either party may be referred to and used in such accounting.

(5) That an injunction be issued out of and under the seal of this Court, directed to the Defendant, The Osgood Company, its officers, servants, agents, employees, workmen and all their privies, and each and every one of them, enjoining and restraining them during the remainder of the respective terms of said Letters Patents Nos. 1,317,431 and 1,511,114, from directly or indirectly constructing or causing to be constructed and/or using and/or selling or causing to be used or sold or advertising for sale, Ditching or Excavating Machines employing or embodying the inventions set forth in certain of said patents and particularly upon claim 4 of patent No. 1,317,431, by the manufacture, sale and/or use of machines like apparatus illustrated in Plaintiff's Exhibit P-29, pages 20, 21 and upper right hand view on page 23, Bulletin 2620, Exhibits 3 and 8 marked "attached to Plaintiff's interrogatories" and Exhibit 9 marked "Entered Downie's Reply Affidavit," Photographs K, F and G of Plaintiff's Exhibit P-31 and in Plaintiff's Exhibit P-70, and any other apparatus, article, device or parts and/or combinations containing, employing or embodying the inventions and improvements described in Letters Patent No. 1,317,431 and particularly referred to in claim 4 thereof, and Excavating Machines employing and embodying the inventions set forth in Letters Patent No. 1,511,114 and particularly upon claims 6 to 14, both inclusive, thereof, by the manufacture, sale and/or use of machines like apparatus illustrated on pages 20, 21, Bulletin 2620, Exhibit 3, marked "attached to Plaintiff's Interrogatories" of Plaintiff's Exhibit P-29, Photographs K, J, P and Q of Plaintiff's Exhibit P-31 and Plaintiff's Exhibit P-70, and any other apparatus, article, device or parts and/or combinations containing, employing or embodying the inventions and improvements described in said Letters

Patent No. 1,511,114, and particularly referred to in claims 6 to 14, both inclusive, thereof, or apparatus, article, device, ditching or excavating machines to be used or capable only of use in a combination infringing any of said patents, and from infringing and contributing to infringement upon or violating any of said Letters Patent in any way whatsoever.

(6) The injunction and accounting herein ordered be suspended for ten (10) days from this date in order that Defendant may perfect its appeal. In view of the contemplated appeal the supersedeas bond is hereby fixed at $7500.00 with sureties and conditions to be approved by the judge who allows the appeal.

(7) That Plaintiff recover from the Defendant the Plaintiff's full cost in this suit to be taxed and to have execution therefor.

Entered this 21st day of July, 1931.

GEO. P. HAHN,
United States District Judge.

PETITION FOR APPEAL.

(Filed July 28, 1931.)

[Case No. 965]

The above named defendant, The Osgood Company, feeling aggrieved by the decree rendered and entered in the above entitled cause on the 21st day of July, A. D. 1931, does hereby appeal from said decree to the Circuit Court of Appeals for the Sixth Circuit for the reasons set forth in the assignment of errors filed herewith, and it prays that its appeal be allowed and that citation be issued as provided by law, and that a transcript of the record, proceedings and documents upon which said

decree was based, duly authenticated be sent to the United States Circuit Court of Appeals for the Sixth Circuit, under the rules of such court in such cases made and provided.

And your petitioner desires said appeal shall operate as a supersedeas, and therefore prays that an order be made fixing the amount of security which said defendant shall give and furnish upon such appeal, and that upon giving such security all further proceedings in this court be suspended and stayed until the determination of said appeal by the Circuit Court of Appeals for the Sixth Circuit.

CORBETT & MAHONEY,
Attorneys for Defendant.

Dated July 28, 1931.

ASSIGNMENT OF ERRORS.

(Filed July 28, 1931.)

[Case No. 965]

Now comes the defendant in the above-entitled cause and files the following assignment of errors upon which it will rely in the prosecution of the appeal herewith petitioned for in said cause, from the decree of this court entered on the 21st day of July, 1931:

1. That the court erred in holding United States Letters Patent to LeRoy P. Clutter 1,317,431, dated September 30, 1919, good and valid in law.

2. That the court erred in holding that the said LeRoy P. Clutter was the first, true and original inventor of the invention, improvement and combination described in claim 4 of said patent, 1,317,431.

3. That the court erred in holding that the defendant has infringed claim 4 of the said patent, 1,317,431.

4. That the court erred in holding the Clutter patent 1,317,431 to be valid, without finding the facts upon which this conclusion of law is based.

5. That the court erred in holding the Clutter patent 1,317,431 to be infringed, without finding the facts upon which this conclusion of law is based.

6. That the court erred in following the decision of other courts in the case of Keystone Driller Company vs. the Byers Machine Company et al., at Cleveland, Equity No. 2084, in view of the new evidence introduced on behalf of defendant in this case.

7. That the court erred in not holding that claim 4 of said Clutter patent 1,317,431 dated September 30, 1919, is limited by the specification, file wrapper, prior patents, and the prior state of the art, to substantially the construction disclosed in the drawings and specification of said patent.

8. That the court erred in not holding LeRoy P. Clutter patent 1,317,431 dated September 30, 1919, to be invalid, in view of new evidence introduced by defendant in this case, as to prior patents and the prior state of the art.

9. That the court erred in holding United States Letters Patent, to Robert Rex Downie 1,511,114, dated October 7, 1924, are good and valid in law.

10. That the court erred in holding that the said Robert Rex Downie, was the first, true and original inventor of said inventions, improvements and combinations described in claims 6 to 14 both inclusive of said Downie patent 1,511,114, dated October 7, 1924.

11. That the court erred in holding that the defendant has infringed claims 6 to 14, both inclusive, of the said Downie patent, No. 1,511,114, dated October 7, 1924.

12. That the court erred in holding United States Letters Patent to Robert Rex Downie 1,511,114, dated October 7, 1924, to be valid, without finding the facts upon which this conclusion of law is based.

13. That the court erred in holding United States Letters Patent to Robert Rex Downie 1,511,114, dated October 7, 1924, to be infringed, without finding the facts upon which this conclusion of law is based.

14. That the court's holding that Robert Rex Downie patent 1,511,114, dated October 7, 1924, are good

and valid in law, is inconsistent with the court's finding of fact on pages 32 and 33 of the court's opinion dated June 22, 1931, wherein the Bernard R. Clutter public use at Joplin, Missouri, is found in effect to have anticipated said Downie patent 1,511,114, dated October 7, 1924.

15. That the court erred in not holding that the work of Bernard R. Clutter at Joplin, Missouri, in the latter part of 1919 and the early part of 1920, constituted an anticipation of Downie patent 1,511,114, dated October 7, 1924.

16. That the court erred in not holding that Downie patent 1,511,114, dated October 7, 1924, is invalid in view of new evidence introduced in this case by defendant as to prior patents, and even as to the prior state of the art.

17. That the court erred in holding United States Letters Patent to Robert Rex Downie 1,543,250, dated June 23, 1925, are good and valid in law.

18. That the court erred in holding that Robert Rex Downie was the first, true and original inventor of said inventions, improvements and combinations described in claims 1, 2, 3, 4, 5, 6, 9 and 10 of said Downie patent 1,543,250.

19. That the court erred in not holding that plaintiff is barred from any relief herein by reason of its inequitable conduct.

20. That the court erred in not holding that plaintiff's concealment and suppression of evidence of the Bernard R. Clutter work at Joplin, Missouri, was still effective when this suit was filed, and that therefore plaintiff should be denied any relief.

21. That the court erred in not holding that plaintiff is guilty of unclean hands by reason of its agreement with Bernard R. Clutter to suppress evidence.

22. That the court erred in not holding that the plaintiff came into this court with unclean hands and in not dismissing the bill of complaint on that ground.

23. That the court erred in not holding the plaintiff to be guilty of fraud and suppression of evidence in this case, and in not dismissing the bill of complaint on that ground.

24. That the court erred in not disregarding the decision entered in the suit of the Keystone Driller Com-

pany vs. The Byers Machine Company and Byers Machine Company at Cleveland, Ohio, Equity No. 2084, in view of the suppression and concealment of evidence which the court held in effect to have been perpetrated by the plaintiff in that case.

25. That the court erred in not signing the special finding of facts and conclusions of law filed in this case on the 11th day of July, 1931, and requested by defendant.

26. That the court erred in not finding that the acts of Robert Rex Downie on behalf of the plaintiff company in suppressing and concealing evidence of the Bernard R. Clutter Joplin public use in the latter part of the year 1919 and the early part of the year 1920 constituted unclean hands in this case, and that therefore plaintiff should be denied any relief herein.

27. That the court erred in holding that there was no fraud or suppression of evidence by plaintiff, whatsoever in this case.

28. That the court erred in granting an injunction against the defendant in this case.

29. That the court erred in holding that the plaintiff recover any profits from defendant.

30. That the court erred in holding that the plaintiff recover from defendant any damages.

31. That the court erred in referring the cause to a master to ascertain the amount of damages sustained by plaintiff.

32. That the court erred in holding that plaintiff recover the full costs from defendant.

Wherefore, defendant prays that the said decree may be reversed and for such other and further relief as to this court may seem just and proper.

CORBETT & MAHONEY,

Attorneys for Defendant.

Dated this 28th day of July, A. D. 1931.

ORDER ALLOWING APPEAL WITH SUPERSEDEAS.

(Entered July 29, 1931 by Paul Jones, Judge.)

[Case No. 965]

The petition of The Osgood Company, defendant in the above entitled cause, for an appeal from the decree is hereby granted and the appeal is allowed; and upon petitioner filing a bond in the sum of Seven Thousand Five Hundred ($7500.00) Dollars with sufficient sureties, and conditioned as required by law, the same shall operate as a supersedeas of the decree made and entered in the above cause, and shall suspend and stay the injunction and accounting and all further proceedings in this court until the termination of said appeal by the Circuit Court of Appeals for the Sixth Circuit.

PAUL JONES,
United States District Judge.

Dated 29th day of July, 1931.

BOND ON APPEAL.

(Filed July 29, 1931.)

[Case No. 965]

Know all men by these presents, that we, The Osgood Company, as principal, and United States Fidelity and Guaranty Company as surety, are held and firmly bound unto Keystone Driller Company in the full and just sum of Seven Thousand Five Hundred ($7500.00) Dollars to be paid to the said Keystone Driller Company, its successors or assigns, to which payment, well and truly to be made, we bind ourselves, our successors and assigns, jointly and severally by these presents.

Sealed with our seals, and dated this 28th day of July, 1931.

Whereas, lately, at a regular term of the District Court of United States for the Northern District of Ohio, Western Division, in a suit depending in said Court between Keystone Driller Company, plaintiff and The Osgood Company, defendant, a decree was rendered against the said The Osgood Company, and the said The Osgood Company having obtained an appeal and filed a copy thereof in the Clerk's office of said Court to reverse the decree in the aforesaid suit, and a citation has been issued, directed to the said Keystone Driller Company, citing and admonishing it to appear in the United States Circuit Court of Appeals for the Sixth Circuit at Cincinnati, Ohio, thirty days from and after the date of such citation.

Now, the condition of the above obligation is such, that if the said The Osgood Company shall prosecute said appeal to effect, and answer all damages and costs, if it fails to make good its plea, then the above obligation to be void, else to remain in full force and effect.

THE OSGOOD COMPANY,
By M. C. MCNEIL,
(Corporate Seal) *V. P. & Secy.*

UNITED STATES FIDELITY AND GUARANTY COMPANY,
By LOUIS H. PAINE,
(Seal) *Attorney in Fact.*

The within bond is hereby approved this 29th day of July, 1931, and when filed, will operate as a supersedeas.

PAUL JONES,
United States District Judge.

CITATION ON APPEAL.

(Filed July 29, 1931.)

[Case No. 965]

UNITED STATES CIRCUIT COURT OF APPEALS
FOR THE SIXTH CIRCUIT.

To Keystone Driller Company, Greeting:

You are hereby cited and admonished to be and appear at a session of the United States Circuit Court of Appeals for the Sixth Circuit, to be holden at the City of Cincinnati, in said circuit on the* 28th day of August, 1931 next, pursuant to an order allowing an appeal filed in the Clerk's office of the District Court of the United States for the Northern District of Ohio, wherein The Osgood Company is appellant and you are appellee to show cause, if any there be, why the decree rendered against the said appellant as in the said appeal mentioned, should not be corrected, and why speedy justice should not be done to the parties in that behalf.

WITNESS, the Honorable Charles Evans Hughes, Chief Justice of the United States, this 29th day of July in the year of our Lord one thousand nine hundred and thirty-one and of the Independence of the United States of America the one hundred and fifty-sixth.

PAUL JONES,
Judge of the District Court.

*Not exceeding 30 days from day of signing.

Service of the above citation is hereby acknowledged and appearance of appellee is hereby entered.

July 29, 1931. RICHEY & WATTS.

PETITION FOR CROSS-APPEAL.

(Filed Aug. 7, 1931.)

[Case No. 965]

To the Honorable, the Judges of the District Court of the United States for the Northern District of Ohio, Western Division:

Your petitioner, the Keystone Driller Company, Plaintiff in the above entitled cause, respectfully shows that The Osgood Company, Defendant in the above entitled cause, has been allowed, by the Honorable Judge Paul Jones, an appeal from the decree made on the 21st day of July, 1931, in this cause, and your petitioner also considers himself aggrieved by said decree, and therefore petitioner prays for allowance of a cross-appeal from said decree to the Circuit Court of Appeals for the Sixth Circuit, for reasons stated in the Assignment of Errors, filed herewith; that said defendant prays that this cross-appeal may be allowed; that citation may be granted to the above-named defendant commanding it to appear before the said Circuit Court of Appeals; and that a transcript of the record, proceedings and papers upon which said order was based, duly authenticated, may be sent to the United States Court of Appeals for the Sixth Circuit.

RICHEY & WATTS,
Attorneys for Plaintiff.

Dated August 7, 1931.

ASSIGNMENT OF ERRORS ON CROSS-APPEAL.

(Filed Aug. 7, 1931.)

[Case No. 965]

Now comes the Plaintiff, Keystone Driller Company, by Richey & Watts, its attorneys, and having prayed for a cross-appeal to the United States Circuit Court of Ap-

peals for the Sixth Circuit from the decree made and entered in this case on the 21st day of July, 1931, says that said decree is erroneous and unjust and against the rights of the said Plaintiff, and presents the following Assignment of Errors:

1. The Court erred in holding that the structure of the Defendant's machine does not infringe each and all of the claims 1 to 6 and 9 and 10 of Letters Patent of the United States to Robert Rex Downie, No. 1,543,250, dated June 23, 1925.

2. The Court erred in holding that United States Letters Patent to Robert Rex Downie, No. 1,709,466, dated April 16, 1929, lacked patentable invention as to claims 1, 2, 8, 10, 11, 12, 13, 15 and 19 thereof.

3. The Court erred in holding that if there is patentable invention in claims 1, 2, 8, 10, 11, 12, 13, 15 and 19 in United States Letters Patent to Robert Rex Downie, No. 1,709,466, dated April 16, 1929, the structure of the Defendant's machine did not infringe each and all of said claims of said patent.

4. The Court erred in failing to grant all the relief prayed for in the Bill of Complaint.

5. The Court erred in failing to grant all the relief prayed for in the Supplemental Bill of Complaint.

6. The Court erred in that it did not enter a decree finding that Letters Patent of the United States No. 1,709,466, dated April 16, 1929, is valid as to each and all of the claims 1, 2, 8, 10, 11, 12, 13, 15 and 19 thereof.

7. The Court erred in that it did not enter a decree finding that Letters Patent of the United States to Robert Rex Downie, No. 1,709,466, dated April 16, 1929, as to each and all of the claims 1, 2, 8, 10, 11, 12, 13, 15 and 19 had been infringed by the Defendant.

8. The Court erred in that it did not enter a decree for an injunction restraining the Defendant from infringement of said Letters Patent No. 1,709,466.

9. The Court erred in that it did not enter a decree awarding Plaintiff an accounting for profits and damages by reason of said infringement by Defendant of said Letters Patent No. 1,709,466.

10. The Court erred in that it did not enter a decree finding that Letters Patent No. 1,543,250 as to each and all claims 1 to 6 and 9 and 10 thereof had been infringed by the Defendant.

11. The Court erred in that it did not enter a decree for an injunction restraining the Defendant from infringement of Letters Patent No. 1,543,250.

12. The Court erred in that it did not enter a decree awarding Plaintiff an accounting for profits and damages by reason of the infringement by the Defendant of said Letters Patent No. 1,543,250.

13. The other errors manifest and apparent upon the record.

WHEREFORE, Plaintiff prays that the part of the decree complained of may be reversed and for such other and further relief as to the Court may seem just and proper.

RICHEY & WATTS,
Attorneys for Plaintiff.

August 7, 1931.

ORDER ALLOWING CROSS-APPEAL.

(Entered Aug. 10, 1931, by Paul Jones, Judge.)

[Case No. 965]

The Osgood Company, Defendant in the above entitled cause, having been allowed an appeal by the Honorable Judge Paul Jones, dated July 29, 1931, from the decree made on the 21st day of July, 1931, in this cause; and,

On petition of Plaintiff, Keystone Driller Company, by its attorneys duly filed, it is ordered that a Cross-Appeal to the United States Circuit Court of Appeals for the Sixth Circuit from the said decree, heretofore

filed and entered in this cause on the 21st day of July, 1931, be and the same is hereby allowed; that citation be issued directed to the above named defendant commanding it to appear before the said Circuit Court of Appeals; and that a certified transcript of the record in accordance with the Rules of Practice for Courts of Equity of the United States be transmitted to the said United States Circuit Court of Appeals for the Sixth Circuit.

It is further ordered that the cost bond on Cross Appeal be fixed in the sum of $250.00.

PAUL JONES,
United States District Judge.

Dated: August 10th, 1931.

BOND ON CROSS-APPEAL.

(Filed August 13, 1931.)

[Case No. 965]

KNOW ALL MEN BY THESE PRESENTS, that we, the Keystone Driller Company, as principal, and American Surety Co. of New York, as surety, are held and firmly bound unto The Osgood Company in the full and just sum of Two Hundred and Fifty ($250.00) Dollars to be paid to the said The Osgood Company, its successors or assigns, to which payment, well and truly to be made, we bind ourselves, our successors and assigns, jointly and severally by these presents.

Sealed with our seals, and dated this 11 day of August, 1931.

WHEREAS, lately, at a regular term of the District Court of the United States for the Northern District of Ohio, Western Division, in a suit depending in said Court between Keystone Driller Company, plaintiff, and The Osgood Company, defendant, a decree was rendered in

part against the said The Keystone Driller Company and the said The Keystone Driller Company having obtained a cross-appeal and filed a copy thereof in the Clerk's Office of said Court to reverse that portion of the decree in the aforesaid suit, and a citation has been issued, directed to the said The Osgood Company citing and admonishing it to appear in the United States Circuit Court of Appeals for the Sixth Circuit at Cincinnati, Ohio, thirty days from and after the date of such citation.

Now, the condition of the above obligation is such, that if the said The Keystone Driller Company shall prosecute said cross-appeal to effect, and answer all costs for this said cross-appeal if it fails to make good its plea, then the above obligation to be void, else to remain in full force and effect.

KEYSTONE DRILLER COMPANY,
By RICHEY & WATTS,
Attys. for Plaintiff.

AMERICAN SURETY COMPANY OF NEW YORK,
EDW. F. ARCHER,
Resident Vice President.

Attest

(Seal) R. M. WILL,
Resident Assistant Secretary.

The within bond is hereby approved this 12th day of August, 1931, and when filed, will operate as a supersedeas.

PAUL JONES,
United States District Judge.

CITATION ON CROSS-APPEAL.

(Filed Aug. 14, 1931.)

[Case No. 965]

UNITED STATES CIRCUIT COURT OF APPEALS
FOR THE SIXTH CIRCUIT.

To The Osgood Company—Greeting.

You are hereby cited and admonished to be and appear at a session of the United States Circuit Court of Appeals for the Sixth Circuit, to be holden at the City of Cincinnati, in said Circuit, on the* 9th day of September next, pursuant to an appeal filed in the Clerk's office of the District Court of the United States for the Northern District of Ohio, wherein Keystone Driller Company is appellant and you are appellee to show cause, if any there be, why the decree rendered against the said appellant as in the said petition for appeal mentioned, should not be corrected, and why speedy justice should not be done to the parties in that behalf.

WITNESS the Honorable CHARLES EVANS HUGHES, Chief Justice of the United States, this 10th day of August in the year of our Lord one thousand nine hundred and thirty-one and of the Independence of the United States of America the one hundred and fifty-sixth.

PAUL JONES,
Judge of the District Court.

*Not exceeding 30 days from day of signing.

Service of the above citation is hereby acknowledged and appearance of appellee is hereby entered.

CORBETT & MAHONEY.

August 10th, 1931.

ORDER EXTENDING TIME WITHIN WHICH TO LODGE NARRATIVE FORM OF TESTIMONY.

(Entered Aug. 22, 1931, by Paul Jones, Judge.)

[Case No. 965]

For good cause shown, it is ordered that the time for lodging the narrative form of testimony in the above entitled cause, be extended to and including September 15, 1931.

JONES,

United States District Judge.

August 22nd, 1931.

ORDER EXTENDING TIME FOR FILING TRANSCRIPT OF RECORD.

(Entered Aug. 22, 1931 by Paul Jones, Judge.)

[Case No. 965]

For good cause shown, it is Ordered that the time for filing the transcript of record in the United States Circuit Court of Appeals for the Sixth Circuit, in the above-entitled case, be extended to and including September 28, 1931.

JONES,

United States District Judge.

Dated: August 22nd, 1931.

MOTION TO EXTEND TIME TO FILE TRANSCRIPT OF RECORD.

(Filed Sept. 24, 1931.)

[Case No. 965]

Now comes the Defendant, by its Attorneys, and prays that the time for filing the transcript of record in the United States Circuit Court of Appeals for the Sixth Circuit, in the above-entitled cause, be extended to and including October 28, 1931.

In support of this Motion, the Affidavit of John J. Mahoney is hereto annexed and made part hereof as Exhibit A.

CORBETT & MAHONEY,
Attorneys for Defendant.

Sept. 21, 1931.

Notice.

Messrs. Richey & Watts,
Attorneys for Plaintiff,
1090 Union Trust Building,
Cleveland, Ohio.

Gentlemen:

Please take notice that the above Motion will be presented to his Honor, Judge Jones, in the Court Room, Federal Building, Cleveland, Ohio, on the 24th day of September, 1931, at 9 o'clock, A. M., or as soon thereafter as Counsel may be heard.

CORBETT & MAHONEY,
Attorneys for Defendant.

A copy of the above-entitled Motion, Notice and Affidavit were today mailed to Messrs. Richey & Watts, Attorneys for the Plaintiff, 1090 Union Trust Building, Cleveland, Ohio.

CORBETT & MAHONEY,
Attorneys for Defendant.

September 21, 1931.

"EXHIBIT A."

AFFIDAVIT OF JOHN J. MAHONEY.

(Filed Sept. 24, 1931.)

[Case No. 965]

John J. Mahoney, being first duly sworn, deposes and says that he is one of the Attorneys for Defendant in the above-entitled cause; that on July 29, 1931, this Court granted an Appeal in the above-entitled cause; that the return day of this Citation issued herein has been extended by Court Order until the 28th day of September, 1931; that the trial in the above-entitled cause lasted several weeks; that, consequently, the record in the cause is voluminous; that in addition to the evidence taken in Court, there were some fifty depositions offered in evidence; that Counsel for Defendant has been proceeding very diligently in the preparation of this record for appeal; that the Narrative Statement of Testimony under Equity Rule 75 has been filed as well as Defendant's Praecipe for Transcript; that under the Rules, approval of Defendant's Narrative Form of Testimony can not be had until September 25, 1931, and that if approved on that date it would be a physical impossibility to print the record before September 28, 1931; that the additional time requested is therefore necessary in order to print the record on appeal.

JOHN J. MAHONEY.

Subscribed and sworn to before me, a Notary Public, this 21st day of September, 1931.

BERNICE L. HAHN,

(Notarial Seal) *Notary Public in and for Franklin County.*

BERNICE L. HAHN.

My commission expires Jan. 3, 1932.

ORDER EXTENDING TIME FOR FILING TRANSCRIPT OF RECORD.

(Entered Sept. 24, 1931 by Paul Jones, Judge.)

[Case No. 965]

For good cause shown, it is Ordered that Defendant's time for filing the transcript of record in the United States Circuit Court of Appeals for the Sixth Circuit, in the above-entitled cause, be extended to and including October 28, 1931.

PAUL JONES,
United States District Judge.

Dated:
September 24th, 1931.

CONSOLIDATED PRAECIPE FOR TRANSCRIPT.

(Filed Sept. 16, 1931.)

[Cases Nos. 964 and 965]

To the Clerk of the United States District Court for the Northern District of Ohio, Western Division:

Sir:

You are hereby requested to make a transcript of record to be filed in United States Circuit Court of Appeals for the Sixth Circuit, in the above entitled consolidated cause, pursuant to an appeal from an interlocutory decree allowed to the plaintiff on the 21st day of July, 1931, in each of the above entitled cases, and to include in such transcript of record the following papers:

PAPERS IN EQUITY CAUSE NO. 964.

Caption.

1. Order of Consolidation for Appeal, entered September 15, 1931.

2. Bill of Complaint, filed February 9, 1929.

3. Plaintiff's Interrogatories, filed February 9, 1929.

4. Affidavit of Robert Rex Downie, filed February 9, 1929.

5. Motion for Preliminary Injunction, filed February 9, 1929.

6. Order to Show Cause, entered February 9, 1929.

7. Order Modifying Order to Show Cause, entered February 18, 1929.

8. Order Extending Time for Serving Copies of Order, entered February 21, 1929.

9. Defendant's Answer to Plaintiff's Interrogatories, filed February 25, 1929.

10. Stipulation Extending Time to Answer, filed February 28, 1929.

11. Order Modifying Dates in Order to Show Cause, entered March 9, 1929.

12. Stipulation Extending Time for Filing Papers, entered March 28, 1929.

13. Order Modifying Dates in Order to Show Cause, entered March 28, 1929.

14. Defendant's Answer, filed March 29, 1929.

15. Stipulation re Use of Uncertified Copies of Patent, etc. at Trial, entered April 15, 1929.

16. Memorandum Opinion of Court upon motion for Preliminary Injunction, filed April 25, 1929.

17. Order Denying Motion for Preliminary Injunction, entered June 12, 1929.

18. Bond of Defendant for $15,000, filed June 12, 1929.

19. Stipulation in re Time for Taking Depositions, entered June 13, 1929.

20. Supplemental Bill of Complaint, filed August 9, 1929.

21. Order Granting Leave to File Supplemental Bill of Complaint, entered August 23, 1929.

22. Order Allowing Defendant Extension of Time to Answer Supplemental Bill of Complaint, entered September 9, 1929.

23. Order Permitting The General Excavator Company and The Osgood Company to Take Depositions Jointly, filed September 9, 1929.

24. Stipulation re Depositions, filed September 30, 1929.

25. Answer to Supplemental Bill of Complaint, filed October 10, 1929.

25A. Plaintiff's Interrogatories, filed October 21, 1929.

25B. Defendant's Objections to Plaintiff's Interrogatories, filed October 31, 1929.*

26. Stipulation re Interrogatories and Depositions, filed October 31, 1929.

27. Stipulation and Order Extending Time of Defendant to Take Depositions, filed October 31, 1929.

28. Stipulation re Depositions, filed December 4, 1929.

29. Stipulation re Depositions, filed January 3, 1930.

30. Stipulation re Depositions, filed February 4, 1930.

31. Motion and Order Extending Time for Taking Depositions, filed February 21, 1930.

32. Stipulation re Depositions, filed February 27, 1930.

33. Motion and Order Extending Time for Taking Depositions, filed March 18, 1930.

34. Stipulation in re Depositions, filed April 1, 1930.

25. Stipulation in re Depositions, filed April 29, 1930.

26. Order Allowing Substitution of Bond, entered May 17, 1930.

27. Copy of Bond in Lieu of Preliminary Injunction, filed May 17, 1930.

28. Stipulation in re Depositions, filed June 3, 1930.

29. Stipulation and Order in re Depositions, filed June 26, 1930.

---

*The items in black face type represent the papers called for by Plaintiff's Additional Praecipe and have been inserted herein to preserve the chronology of the Docket Entries.

30. Stipulation in re Depositions, filed July 29, 1930.

31. Stipulation in re Depositions, filed September 5, 1930.

32. Stipulation in re Depositions, filed September 23, 1930.

33. Order Extending Defendant's Time for Taking Depositions, entered September 29, 1930.

34. Order Extending Defendant's Time for Taking Depositions, entered October 29, 1930.

35. Order Extending Defendant's Time for Taking Depositions, entered November 26, 1930.

36. Motion to Compel Production and Inspection of Documents, and Affidavit of Edward L. Reed, filed December 31, 1930.

36A. Offer by Plaintiff to Produce Letters etc., filed December 31, 1930.

37. Affidavit of F. O. Richey and A. H. Edgerton, filed December 31, 1930.

38. Affidavit of Robert Rex Downie, filed December 31, 1930.

39. Order Dismissing Defendant's Motion to Compel Production and Inspection of Documents, entered February 2, 1931.

40. Stipulation in re Title to Certain Patents, filed February 11, 1931.

41. Stipulation and Order Allowing Use of Uncertified Printed Copies of Patents in Suit, entered February 16, 1931.

42. Order Allowing Amendment to Defendant's Answer to Supplemental Bill of Complaint, entered February 16, 1931.

43. Amendment to Answer to Supplemental Bill of Complaint, filed February 16, 1931.

44. Order Allowing Amendment to Defendant's Answer to Original Bill of Complaint, entered February 16, 1931.

45. Amendment to Answer to Original Bill of Complaint, filed February 16, 1931.

46. Order Consolidating Cause Number 964 with Cause Number 965 for the Purpose of Trial, entered March 3, 1931:

47. Stipulation re Use of Depositions of John B. Webber, Walter S. Culver, and Frank H. King, filed March 3, 1931.

48. Stipulation re Deposition of William Mitchell, filed March 4, 1931.

49. Order Permitting Taking of Depositions at South Milwaukee, Wisconsin, entered April 20, 1931.

PAPERS IN EQUITY CAUSE NO. 965.

50. Order of Consolidation for Appeal, entered September 15, 1931.

51. Bill of Complaint, filed February 9, 1929.

51A. Plaintiff's Interrogatories, filed February 9, 1929.

51B. Affidavit of Robert Rex Downie, filed February 9, 1929.

52. Motion for Preliminary Injunction, filed February 9, 1929.

53. Order to Show Cause, entered February 9, 1929.

54. Order Modifying Dates in Order to Show Cause, entered February 16, 1929.

55. Order Modifying Dates in Order to Show Cause, entered February 20, 1929.

55A. Objections to Plaintiff's Interrogatories, filed February 26, 1929.

55B. Plaintiff's Answer to Defendant's Objection to Plaintiff's Interrogatories, filed March 5, 1929.

56. Stipulation Extending Time to Answer until April 3, 1929, filed March 9, 1929.

57. Order Modifying Dates in Order to Show Cause, entered March 9, 1929.

58. Order Extending Plaintiff's Time for Serving Rebuttal Papers, entered March 28, 1929.

59. Answer, filed April 3, 1929.

60. Stipulation re Use of Uncertified Copies of Patents, etc. at Trial, filed April 9, 1929.

61. Stipulation re Interrogatories and Depositions, filed April 22, 1929.

62. Memorandum Opinion of Court on Motion for Preliminary Injunction, filed April 25, 1929.

63. Stipulation re Interrogatories and Depositions, filed May 27, 1929.

64. Order denying motion for Preliminary Injunction, entered June 6, 1929.

65. Copy of Bond, filed June 6, 1929.

65A. Supplemental Bill of Complaint, filed August 21, 1929.

66. Order Permitting Filing of Supplemental Bill of Complaint, entered August 23, 1929.

67. Motion for an Extension of Defendant's Time to Answer Supplemental Bill of Complaint, and Order Granting Extension, entered September 9, 1929.

68. Order Permitting The General Excavator Company and The Osgood Company to Take Depositions Jointly, entered September 9, 1929.

69. Stipulation re Depositions, filed September 28, 1929.

70. Answer to Supplemental Bill of Complaint, filed October 1, 1929.

70A. Plaintiff's Interrogatories, filed October 21, 1929.

71. Stipulation re Interrogatories and Depositions, filed October 22, 1929.

72. Stipulation re Depositions, filed October 26, 1929.

72A. Objections to Plaintiff's Interrogatories, filed October 31, 1929.

73. Stipulation re Depositions, filed November 30, 1929.

74. Stipulation re Depositions, filed December 24, 1929.

75. Stipulation re Depositions, filed February 4, 1930.

76. Motion for Extension of Time for Taking Depositions, and Order Granting Motion, filed February 21, 1930.

77. Stipulation re Depositions, filed February 27, 1930.

78. Motion to Extend Time to Take Depositions, and Order Granting Extension, filed March 17, 1930.

79. Stipulation re Depositions, filed April 4, 1930.

80. Stipulation re Depositions, filed April 29, 1930.

81. Stipulation re Depositions, filed April 29, 1930.

82. Stipulation re Depositions, filed May 9, 1930.

83. Stipulation re Depositions, filed May 29, 1930.

84. Order Permitting Substitution of Bond, filed May 29, 1930.

85. Copy of Bond, filed May 29, 1930.

86. Stipulation re Depositions, filed June 11, 1930.

87. Stipulation re Depositions, filed June 28, 1930.

88. Stipulation re Depositions, filed July 29, 1930.

89. Stipulation re Depositions, filed August 27, 1930.

90. Stipulation re Depositions, filed September 20, 1930.

91. Order Extending Time for Taking Depositions, filed September 29, 1930.

92. Order Extending Time for Taking Depositions, filed October 29, 1930.

93. Order Extending Time for Taking Depositions, filed November 26, 1930.

94. Motion to Compel Production and Inspection of Documents, filed December 19, 1930.

95. Affidavit of Edwin P. Corbett in Support of Motion, filed December 1930.

96. Affidavit of John J. Mahoney in Support of Motion, filed December 19, 1930.

97. Affidavit of A. H. Edgerton, filed December 20, 1930.

98. Affidavit of F. O. Richey and A. H. Edgerton, filed December 31, 1930.

99. Affidavit of Robert Rex Downie, filed December 31, 1930.

99A. Offer by Plaintiff to Produce Letters, Documents, etc., filed December 31, 1930.

100. Second Affidavit of John J. Mahoney, filed January 2, 1931.

101. Notice Under Revised Statutes of United States, Section No. 4920, filed February 3, 1931.

102. Order Dismissing Defendant's Motion to Compel Production and Inspection of Documents, entered February 2, 1931.

103. Order Permitting Amendment to Defendant's Answer to Be Filed, entered March 2, 1931.

104. Amendment to Defendant's Answer to Original Bill of Complaint, filed March 2, 1931.

105. Order Permitting Amendment to Be Made to Defendant's Answer to Supplemental Bill of Complaint, filed March 2, 1931.

106. Amendment to Defendant's Answer to Supplemental Bill of Complaint, filed March 2, 1931.

107. Order Consolidating Cause Number 965 with Cause Number 964 for the Purpose of Trial, entered March 3, 1931.

108. Stipulation re Depositions of John B. Webber, Walter S. Culver, and Frank H. King, filed March 3, 1931.

109. Stipulation re Deposition of William Mitchell, filed March 4, 1931.

110. Order Permitting Taking of Depositions at South Milwaukee, Wisconsin, entered April 17, 1931.

PAPERS AND RECORDS COMMON TO CAUSES 964 AND 965.

111. Narrative Statement of Testimony, and Notice of Lodging same in Clerk's Office with Proof of Service, filed September 26, 1931.

112. Order Approving Narrative Statement of Testimony, filed September 26, 1931.

113. Memorandum Opinion of Court, filed June 22, 1931.

114. Plaintiff's Exhibits P-1 to P-11 inclusive, P-22 to P-23, P-38, P-45, and P-46, P-73.

115. Defendant's Exhibits 3, 7, 8, 17, 20, 24, 25, 27 to 29 inclusive, 32 to 34 inclusive, 37 to 41 inclusive, 50 to 53 inclusive, 59, 61, 62, 80, 95, 97 to 100 inclusive, 102 to 115 inclusive, 129.

PAPERS IN EQUITY CAUSE NO. 964.

116. Motion and Order Granting Plaintiff Leave to File Chart of Downie Patent 1,709,466 as Plaintiff's Exhibit P-77, filed June 26, 1931.

117. Request for Findings of Fact and Conclusions of Law, filed July 15, 1931.

118. Interlocutory Decree, filed July 21, 1931.

119. Petition for Appeal, filed July 28, 1931.

120. Assignment of Errors, filed July 28, 1931.

121. Order Allowing Appeal, filed July 29, 1931.

122. Copy of Supersedeas Bond on Appeal, filed July 29, 1931.

123. Citation on Appeal, filed July 29, 1931.

124. Petition for Cross Appeal, filed August 7, 1931.

125. Assignment of Errors on Cross Appeal, filed August 7, 1931.

126. Order Allowing Cross Appeal, entered August 10, 1931.

127. Citation on Cross Appeal, filed August 14, 1931.

128. Bond on Cross Appeal, filed and approved August 13, 1931.

129. Order Extending Time to Lodge Narrative Statement, entered August 22, 1931.

130. Order Extending Time to File Transcript of Record, entered August 22, 1931.

PAPERS IN EQUITY CAUSE NO. 965.

131. Request for Findings of Fact and Conclusions of Law, filed July 11, 1931.

132. Interlocutory Decree, filed July 21, 1931.

133. Petition for Appeal, filed July 28, 1931.

134. Assignment of Errors, filed July 28, 1931.

135. Order Allowing Appeal, filed July 29, 1931.

136. Copy of Supersedeas Bond on Appeal, filed July 29, 1931.

137. Citation on Appeal, filed July 29, 1931

138. Petition for Cross Appeal, filed August 7, 1931.

139. Assignment of Errors on Cross Appeal, filed August 7, 1931.

140. Order Allowing Cross Appeal, filed August 10, 1931.

141. Citation on Cross Appeal, filed August 14, 1931.

142. Bond on Cross Appeal, filed August 13, 1931.

143. Order Extending Time to File Transcript of Record, filed August 22, 1931.

144. Order Extending Time for Lodging Narrative Statement, filed August 22, 1931.

PAPERS COMMON TO EQUITY CAUSES 964 AND 965.

145. Stipulation re Withdrawal of Exhibits, filed September 24, 1931.

146. Order Withdrawing Certain Exhibits, filed September 24, 1931.

147. Stipulation re Certification of Record, filed September 26, 1931.

148. This Praecipe, and Proof of Service, filed September 16, 1931.

149. Certificate of Clerk.

EDWARD L. REED,
Attorney for The General Excavator Company.

CORBETT & MAHONEY,
Attorneys for The Osgood Company.

Proof of Service.

STATE OF OHIO,
COUNTY OF LUCAS, SS.

John J. Mahoney, being first duly sworn, deposes and says that he is one of the attorneys for the defendants in the above entitled causes; that on this date he forwarded a copy of the Consolidated Praecipe for Transcript to Messrs. Richey and Watts, 1490 Union Trust Building, Cleveland, Ohio, by registered mail, receipt thereof being attached thereto.

JOHN J. MAHONEY.

Subscribed to and sworn to before me this 15th day of September, 1931.

ADELAIDE MACHEN,
ADELAIDE MACHEN
Notary Public.

(Notarial Seal)

STIPULATION RE WITHDRAWAL OF EXHIBITS.

(Filed Sept. 24, 1931.)

[Case No. 964]

In the above entitled cause, it is stipulated that Plaintiff's Exhibits P-12, P-12-1, P-12-2, P-13, P-14, P-15, P-16, P-17, P-18, P-19, P-20, P-21, P-24 to P-37 inclusive, P-39 to P-44, inclusive, P-47 to P-72, inclusive, P-74 to P-77, inclusive, and Defendant's Exhibits 1, 2, 4, 5, 6, 9 to 16, inclusive, 18, 19, 21 to 23, inclusive, 26, 30, 31, 35, 36, 42 to 49-A, inclusive, 54 to 58, inclusive, 59-A, 60, 63 to 79, inclusive, 81 to 94, inclusive, 96, 101, 116 to 128, inclusive, need not be printed in the transcript of the record, and that the said exhibits, together with all other original exhibits presented by the plaintiff and the defendant at the trial be transmitted to the Clerk of the United States Circuit Court of Appeals for the Sixth Circuit, at Cincinnati, Ohio, for use by the said Court in connection with the appeal in this cause, to be safely kept by him and returned upon the final determination of said appeal.

RICHEY & WATTS,
Attorneys for Plaintiff.

EDWARD L. REED,
Attorney for Defendant.

PRINTER'S NOTE:

An exactly similar Stipulation was filed in Case No. 965, but signed by Corbett & Mahoney as Attorneys for Defendant.

ORDER WITHDRAWING CERTAIN EXHIBITS.

(Entered Sept. 24, 1931, by Geo. P. Hahn, Judge.)

[Case No. 964]

Pursuant to stipulation filed herein, it is ordered that Plaintiff's Exhibits P-12, P-12-1, P-12-2, P-13, P-14, P-15, P-16, P-17, P-18, P-19, P-20, P-21, P-24 to P-37, inclusive, P-39 to P-44, inclusive, P-47 to P-72, inclusive, P-74 to P-77, inclusive, and Defendant's Exhibits 1, 2, 4, 5, 6, 9 to 16, inclusive, 18, 19, 21 to 23, inclusive, 26, 30, 31, 35, 36, 42 to 49-A, inclusive, 54 to 58, inclusive, 59-A, 60, 63 to 79, inclusive, 81 to 94, inclusive, 96, 101, 116 to 128, inclusive, need not be printed in the transcript of the record, and that the said exhibits, together with all other original exhibits presented by the plaintiff and the defendant at the trial be transmitted to the Clerk of the United States Circuit Court of Appeals for the Sixth Circuit at Cincinnati, Ohio, for use by the said Court in connection with the appeal in this cause, to be safely kept by him and returned upon the final determination of said appeal.

GEO. P. HAHN,
United States District Judge.

Dated September 24th, 1931.

PRINTER'S NOTE:

An exactly similar Order was entered Sept. 24, 1931, by Geo. P. Hahn, Judge, in Case No. 965.

STIPULATION AND ORDER RE AMENDMENTS OR OBJECTIONS TO NARRATIVE FORM OF TESTIMONY.

(Filed Sept. 25, 1931.)

[Cases Nos. 964 and 965]

It is hereby stipulated and agreed by and between Counsel in the above entitled causes, this Honorable Court consenting, that the Plaintiff's time for filing amendments or objections to the Narrative Form of Testimony lodged by Defendants in the clerk's office September 15, 1931, in the above entitled causes, may be and is hereby extended to and including Monday, September 28, 1931.

EDWARD L. REED,
Attorney for
The General Excavator Company.

CORBETT & MAHONEY,
Attorneys for The Osgood Company.

RICHEY & WATTS,
Attorneys for Keystone Driller.

Cleveland, Ohio, September 25, 1931.

It is so ordered.

GEO. P. HAHN,
United States District Judge.

PRINTER'S NOTE:

The list of Corrections in and Amendments to the Narrative Form of Testimony which Counsel stipulated should be embodied in the Narrative that was delivered to the printer were all transcribed upon the copy of same before it was reduced to type, and same has been omitted herefrom to avoid duplication and expense.

PLAINTIFF'S ADDITIONAL PRAECIPE FOR TRANSCRIPT—CONSOLIDATED.

(Filed Sept. 26, 1931.)

[Cases Nos. 964 and 965]

To the Clerk of the United States District Court for the Northern District of Ohio, Western Division:

Sir:

You are hereby requested to include in the transcript of record to be filed in the United States Circuit Court of Appeals for the Sixth Circuit in the above entitled consolidated cause, pursuant to a cross appeal from an interlocutory decree on the 21st day of July, 1931, in each of the above entitled causes, the following papers:

PAPERS IN EQUITY CAUSE NO. 964.

1. Plaintiff's Interrogatories and Order, filed October 21, 1929.

2. Defendant's Objection to Plaintiff's Interrogatories, filed October 31, 1929.

3. Offer by Plaintiff to Produce Letters, Documents, Etc., filed December 31, 1930.

4. Motion for Prompt Decree, filed June 25, 1931, by Plaintiff.

PAPERS IN EQUITY CAUSE NO. 965.

1. Supplemental Bill of Complaint, filed August 21, 1929.

2. Plaintiff's Interrogatories, filed February 9, 1929.

3. Affidavit of R. R. Downie, filed February 9, 1929.

4. Objections to Plaintiff's Interrogatories, filed February 26, 1929.

5. Plaintiff's Answer to Defendant's Objections to Plaintiff's Interrogatories, filed March 5, 1929.

6. Plaintiff's Interrogatories, filed October 21, 1929.

7. Objections to Plaintiff's Interrogatories, filed October 31, 1929.

8. Offer by Plaintiff to Produce Letters, filed December 31, 1930.

9. Plaintiff's Motion for Entry of Decree, filed June 25, 1931.

RICHEY & WATTS,
Attorneys for Keystone Driller Company.

Service of copy of the foregoing papers is hereby acknowledged this 25th day of September, 1931.

EDWARD L. REED,
Attorney for General Excavator Company.

CORBETT & MAHONEY,
Attorney for Osgood Co.

STIPULATION RE CERTIFICATION OF RECORD.

(Filed Sept. 26, 1931.)

[Case No. 964]

In accordance with Section 6 of Rule 44 of the General Rules of this Court, it is hereby agreed that the record as presented to the Clerk by the printer may be certified by the Clerk, as required by law and the Rules of the United States Circuit Court of Appeals for the Sixth Circuit, as a true, full and complete copy of the original pleadings, papers, and orders, used on the trial of this cause, as set forth in the praecipes for transcript, without further comparison by the Clerk.

Dated: September 25, 1931.

RICHEY & WATTS,
Attorneys for Plaintiff.

Dated: September 25, 1931.

EDWARD L. REED,
Attorney for Defendant.

PRINTER'S NOTE:

A Stipulation was filed on Sept. 26, 1931 in Case No. 965, exactly like the foregoing, except that it was signed by Messrs. Corbett and Mahoney as Attorneys for Defendant.

STIPULATION AND ORDER RE PATENTS.

(Filed Oct. 14, 1931.)

[Cases Nos. 964 and 965]

It is hereby stipulated by and between the parties, subject to the approval of the Honorable Court, that copies of the answer patents need not be included in more than fifteen (15) copies of the record to be filed with the Court of Appeals in the above-entitled cause.

RICHEY & WATTS,
Attorneys for Keystone Driller Co.

EDWARD L. REED,
Attorney for The General Excavator Co.

CORBETT & MAHONEY,
Attorneys for The Osgood Co.

Order.

It is so ordered.

GEO. P. HAHN,
United States District Judge.

Dated October 14, 1931.

ORDER EXTENDING TIME FOR FILING TRANSCRIPT OF RECORD IN THE UNITED STATES CIRCUIT COURT OF APPEALS.

(Entered October 20, 1931, by Paul Jones, Judge.)

[Case No. 964]

Upon application made and for good cause shown, it is hereby ordered that the time for filing the transcript of record in the above cause in the United States Circuit Court of Appeals for the Sixth Circuit be extended from October 28, 1931 to November 21, 1931.

PAUL JONES,
Judge, U. S. District Court.

October 20, 1931.

PRINTER'S NOTE:

An exactly similar order was entered on October 20, 1931, by Paul Jones, Judge, in case No. 965.

CERTIFICATE OF CLERK.

NORTHERN DISTRICT OF OHIO, ss.

I, F. J. Denzler, Clerk of the United States District Court within and for said district, do hereby certify that the foregoing printed pages contain a full, true and complete copy of the record and all proceedings in this cause, including the petitions for appeal, assignments of error, orders allowing appeal and the bonds on appeal, in accordance with the praecipes for transcript filed herein, the originals of which, except certain exhibits withdrawn by leave of Court, remain in my custody as clerk of said Court.

There is also attached to and transmitted herewith the citations issued and allowed herein.

In testimony whereof, I have hereunto signed my name and affixed the seal of said court, at Toledo, in said district, this 16th day of November, A. D. 1931, and in the 156th year of the Independence of the United States of America.

F. J. DENZLER,
Clerk,

(Seal)

By K. V. WILSON,
Deputy Clerk.

United States Circuit Court of Appeals

FOR THE SIXTH CIRCUIT.

No. 964.

GENERAL EXCAVATOR COMPANY,
Appellant,

vs.

KEYSTONE DRILLER COMPANY,
Appellee.

KEYSTONE DRILLER COMPANY,
Cross-Appellant,

vs.

GENERAL EXCAVATOR COMPANY,
Cross-Appellee.

No. 965.

THE OSGOOD COMPANY,
Appellant,

vs.

KEYSTONE DRILLER COMPANY,
Appellee.

KEYSTONE DRILLER COMPANY,
Cross-Appellant,

vs.

THE OSGOOD COMPANY,
Cross-Appellee.

APPEALS FROM THE UNITED STATES DISTRICT COURT,
FOR THE NORTHERN DISTRICT OF OHIO,
WESTERN DIVISION.

TRANSCRIPT OF RECORD
VOLUME III
PLAINTIFF'S AND DEFENDANTS' EXHIBITS

NAMES AND ADDRESSES OF COUNSEL
(Inside Front Cover)

INDEX

VOLUME III

PLAINTIFF'S AND DEFENDANTS' EXHIBITS

Cases Nos. 964 and 965

PLAINTIFF'S INTERROGATORY EXHIBITS ATTACHED TO PLEADINGS

CASE 964.

Plaintiff's Interrogatories (filed Feb. 9, 1929)

	Offered Vol. I	Printed Vol. III
Exhibit 1. General Excavator Catalogue—Bulletin No. 2703	18	1
Exhibit 2. General Excavator Catalogue—Bulletin No. 2805	18	13
Affidavit of Robert Rex Downie (Filed Feb. 9, 1929)		
Photographs Illustrating Defendant's Machine in Operation:		
Exhibit 7. Photograph	25	37
Exhibit 8. Photograph	25	37
Exhibit 9. Photograph	25	37
Exhibit 10. Photograph	25	37
Exhibit 11. Photograph	25	39
Exhibit 12. Photograph	25	39
Exhibit 13. Photograph	25	39
Exhibit 14. Photograph	25	39
Exhibit 15. Photograph	25	41
Exhibit 16. Photograph	25	41
Exhibit 17. Photograph	25	41
Exhibit 18. Photograph	25	41
Exhibit 19. Photograph	25	43
Exhibit 20. Photograph	25	43
Exhibit 21. Photograph	25	43
Exhibit 22. Photograph	25	43

CASE 965.

Plaintiff's Interrogatories (filed Feb. 9, 1929)

	Offered Vol. I	Printed Vol. III
Exhibit 1. Osgood Catalogue—Bulletin No. 2620	105	45
Exhibit 2. Osgood Catalogue—Bulletin No. 2624	105	73
Exhibit 3. Illustrations from Illustrated Newspaper entitled "The Osgood Pictorial News"—		
(a) Photograph of "An Osgood Gasoline Back Hoe, engaged in excavating a section of the New York subway. Moranti & Raymond of New York City are the owners"	105	77
(b) Photograph of a Back Hoe, inscribed: "Here's the way an Osgood Back Hoe looks from position in trench in front of the machine. Owned by Gjellefats & Chapman, of Chicago, Ill., and engaged on a sewer job"	105	79
Exhibit 8. Large photograph of Excavator	105	81

Plaintiff's Interrogatories (filed Oct. 21, 1929)

Photographs of Excavator

	Offered Vol. I	Printed Vol. III
Exhibit 1. Photograph	157	83
Exhibit 2. Photograph	157	83
Exhibit 3. Photograph	157	83
Exhibit 4. Photograph	157	83
Exhibit 5. Photograph	157	85
Exhibit 6. Photograph	157	85
Exhibit 7. Photograph	157	85
Exhibit 8. Photograph	157	85
Exhibit 9. Photograph	157	87
Exhibit 10. Photograph	157	87
Exhibit 11. Photograph	157	87
Exhibit 12. Photograph	157	87
Exhibit 13. Photograph	157	89

PLAINTIFF'S EXHIBITS

Cases 964 and 965

(W in last column signifies *Withdrawn*)

		Offered Vol. I	Printed Vol. III
P- 1.	U. S. Patent No. 1,317,431, Sep. 30, 1919, to LeRoy P. Clutter	220	91
P- 2.	U. S. Patent No. 1,511,114, Oct. 7, 1924, to R. R. Downie	220	97
P- 3.	U. S. Patent No. 1,543,250, Jun. 23, 1925, to R. R. Downie	220	109
P- 4.	U. S. Patent No. 1,709,466, Apr. 16, 1929, to R. R. Downie	220	119
P- 5.	U. S. Patent No. 1,716,432, Jun. 11, 1929, to R. R. Downie	220	129
P- 6.	Stipulation dated Feb. 25, 1931, and filed in Case No. 965	220	135
	Plaintiff's Exhibit 1. Photostatic reproductions of pages 20, 21 and 23 of Osgood Bulletin 2620. [See Pages 66, 67 and 69 of Exhibits, Vol. III]	220	137
	Plaintiff's Exhibit 3. Photostatic reproduction of one of the Photographs in the Illustrated Paper entitled "The Osgood Pictorial News." [See Page 77 of Exhibits, Vol. III]	220	137
	Plaintiff's Exhibit 8. Photostatic reproduction of a photograph of an Excavator working in rock and numbered No. 3364. [See Page 81 of Exhibits, Vol. III]	220	137
	Plaintiff's Exhibit 9. Photostatic reproduction of an Excavator	220	139
P- 7.	Certified Copy of the Decree on Motion for Preliminary Injunction in Keystone Driller Co. vs. Day & Maddock Co., Equity 3617, Jan. 23, 1931, Cleveland Docket	220	141
P- 8.	Certified Copy of Final Decree by Consent in Keystone Driller Co. vs. Thew Shovel, No. 3616, Cleveland Docket	220	143

		Offered Vol. I	Printed Vol. III
P- 9.	Certified Copy of Final Decree in Keystone Driller Co. vs. Byers Machine Co., Equity No. 2084, Cleveland Docket	220	147
P-10.	Certified Copy of Interlocutory Decree in Keystone Driller Co. vs. Bay City Shovel, Inc., Equity No. 205, Eastern District of Michigan, Northern Division	220	151
P-11.	Assignments of Patent in Suit to Keystone Driller Co.	220	156
P-12.	Vol. 1 of Record, Byers vs. Keystone	220	W
P-12-1.	Vol. 2 of Record, Byers vs. Keystone	221	W
P-12-2.	Envelope Containing Exhibits in Byers Case, No. 2084	221	W
P-13.	Keystone Bulletin 901, October, 1919	227	W
P-14.	Series of Photographs Showing First Clutter Ditcher, operating at Conway, Pa., April or May, 1914	234	W
P-15.	Clutter Model	235	W
P-16.	Four Photographs	245	W
P-17.	Second Model	245	W
P-18.	Catalogue, Bulletin 903, issued January, 1921	246	W
P-19.	Photographs illustrating Second Downie Patent 1,543,250	249	W
P-20.	Catalogue illustrating Improvements of Second Downie Patent, 1,543,250	249	W
P-21.	Catalogue showing Improvements of Third Downie Patent, 1,709,466	250	W
P-22.	Letters of Notice to the Osgood Company:		
	Siggers to Corbett, Aug. 26, 1929	253	163
	Corbett to Siggers & Adams, June 26, 1929	253	164
	Osgood to Siggers & Adams, June 7, 1929	253	165
	Siggers & Adams to Osgood, June 4, 1929	253	166
	Osgood to Siggers & Adams, Nov. 21, 1927	253	167

		Offered Vol. I	Printed Vol. III
P-23.	Letters of Notice to General Excavator Co:		
	Siggers & Adams to General Excavator, June 10, 1929	253	169
	General Excavator to Siggers & Adams, June 7, 1929	253	169
	Siggers & Adams to General Excavator, June 4, 1929	253	171
	F. O. Richey to General Excavator, Jan. 31, 1929	253	171
	Siggers & Adams to General Excavator, Jan. 24, 1929	253	172
	Siggers & Adams to Corbett, Oct. 3, 1928	253	172
	Corbett to Siggers & Adams, Oct. 1, 1928	253	173
	General Excavator to Siggers & Adams, Oct. 1, 1928	253	174
	Siggers to General Excavator, Sept. 19, 1928	253	175
	General Excavator to Siggers & Adams, April 17, 1928	253	176
	Siggers to General Excavator, April 11, 1928	253	177
P-24.	General Excavator Catalogue	254	W
P-25.	General Excavator Catalogue	258	W
P-26.	General Excavator Catalogue	258	W
P-27.	Group of Photographs of General Commercial Machine	258	W
P-28.	Group of Photographs of General Commercial Machine	258	W
P-29.	Osgood Catalogue of Photostats	264	W
P-30.	Group of Photographs of Osgood Machine	264	W
P-31.	Second Photograph of Same	264	W
P-32.	Set of Photostats of First Byers Machine	265	W
P-33.	Set of Photostats of Second Byers Machine	265	W
P-34.	Set of Photostats of Third Byers Machine	265	W
P-35.	Moving Picture Film	267	W
P-36.	Photograph of General Machine	301	W

		Offered Vol. I	Printed Vol. III
P-37.	Photograph of General Machine	301	W
P-38.	Sketch of Osgood Machine—In connection with Second Downie Patent	301	179
P-39.	Photographs of Machine Showing Additional Abutments	302	W
P-40.	Photograph corresponding to Sheet H of Exhibit P-27	341	W
P-41.	Photograph corresponding to Sheet I of Exhibit P-27	341	W

		Offered Vol. II	Printed Vol. III
P-42.	Photograph	778	W
P-43.	Photograph	778	W
P-44.	Photograph of Keystone Machine over a truck unloading	778	W
P-45.	Letter, April 12, 1929, Keystone Driller Co. to G. E. Wagner	777	181
P-46.	Letter, April 12, 1929, Keystone Driller Co. to B. C. Clutter	777	182
P-47.	Four Photographs with attached Certificate of Harry P. Cullen, dated June 2, 1927	785	W
P-48.	Four Photographs illustrating trench dug in Conway, Pa.	788	W
P-49.	Moving Picture Film of Keystone No. 4 Machine at Work in Akron, Ohio	794	W
P-50.	Moving Picture Film illustrating Undercutting Strokes	794	W
P-51.	Stone moved by Excavator	794	W
P-52.	Stone moved by Excavator	794	W
P-53.	Photograph illustrating type of material handled	796	W
P-54.	Photograph illustrating type of material handled	796	W
P-55.	Photograph illustrating type of material handled	796	W

		Offered Vol. II	Printed Vol. III
P-56.	Photograph illustrating type of material handled	796	W
P-57.	Photograph illustrating type of material handled	796	W
P-58.	Leaflet, dated May 1, 1923	818	W
P-59.	Leaflet issued between 1921 and 1926	818	W
P-60.	Leaflet issued in 1926 or 1927	818	W
P-61.	Model of Machine	858	W
P-62.	Silhouette Model referred to in discussing Joplin Machine	864	W
P-63.	Wooden bottom side rake tooth	865	W
P-64.	Voucher for $1625.62, April 13, 1914	871	W
P-65.	Voucher for $1816.11, May 12, 1914	871	W
P-66.	Voucher for $484.50, June 10, 1914	871	W
P-67.	Voucher for $692.97, July 13, 1914	871	W
P-68.	Profile of work in Conway, Pa.	872	W
P-69.	Photograph of Skimmer showing side tooth	941	W
P-70.	Motion Picture Film of Keystone Machine in Operation	943	W
P-71.	Blue print of Scoop	948	W
P-72.	Model of Scoop and Stick	977	W
P-73.	Affidavit of Herbert Wallower, dated May 8, 1925	992	183
P-74.	Bills Receivable Account of B. R. Clutter	1007	W
P-75.	Journal Sheet of August, 1927	1007	W
P-76.	Copy of Brief	1065	W

DEFENDANTS' EXHIBITS

Cases 964 and 965

(W in last column signifies *Withdrawn*)

		Offered Vol. I	Printed Vol. III
No. 1.	Mahoney Railroad Ditching Machine	394	W
No. 2.	Photograph of The Mahoney Railroad Ditching Machine Company Circular, Side Ditching Machine	395	W
No. 3.	U. S. Patent No. 1,194,204, Aug. 8, 1916, to D. H. Mahoney	396	185
No. 4.	Photograph of Mahoney Ditching Machine used on farm South of Vincennes, Indiana	396	W
No. 5.	Photograph of Mahoney In-Stroke Ditcher used at Gorham, Illinois and Vincennes, Indiana	399	W
No. 6.	Photograph of Daniel Mahoney Ditching Machine, excavating large ditch	400	W
No. 7.	Letter from Oliver Bros., New York, Oct. 31, 1914, to The Mahoney Railroad Ditching Machine Co., Vincennes, Ind.	402	189
No. 8.	Answer of Mahoney Railroad Ditching Machine Co. to letter from Oliver Bros., dated Oct. 31, 1914	402	190
No. 9.	Photograph of Machine built for The Mahoney Railroad Ditching Machine Co. by Lidgerwood Co.	404	W
No. 10.	Photograph of Building on Buntin Street between Third and Fourth, Vincennes, Indiana	436	W
No. 11.	Photograph of House on Fourth and Buntin Streets	437	W
No. 12.	Certified Copies of Proceedings before the Commissioners Court of Knox County, Indiana, with reference to the Construction of the Perry D. Green Road near Vincennes, Indiana	441	W
No. 13.	Certified Copy of Proceedings with relation to the Construction of Storm Sewer No. One in the City of Vincennes, Indiana, during year 1914	442	W

		Offered Vol. I	Printed Vol. III
No. 14.	Map of the Linneweber Ditch, Knox County, Indiana	444	W
No. 15.	Certified Copy of Proceedings with Relation to Construction of the Linneweber Ditch at Westphalia, Indiana	447	W
No. 16.	St. Louis & Southwestern Railway Co., Time Table	452	W
No. 17.	Receipt for Hospital Expenses of L. Barekman, dated July 24, 1913, at Vincennes, Indiana, signed J. P. Ramsey	452	191
No. 18.	Certified Copy of Minutes of the Commissioners of the Big Lake Special Drainage District, Jackson County, Illinois	466	W
No. 19.	Attorney Eugene W. Johnson's Original File Wrapper and Office Letter of Mahoney Application 7348 which issued as United States Letters Patent 1,194,204, Aug. 8, 1916	472	W
No. 20.	U. S. Patent No. 557,350, March 31, 1896, to J. B. Webber for Steam Shovel or Excavator	480	193
No. 21.	Drawing of Vulcan Iron Works Company's "Back-Action" Excavator, dated May 13, 1895	481	W
No. 22.	Photograph of Vulcan "Back-Action" Shovel made in accordance with the Webber Patent, No. 557,350	483	W
No. 23.	Page 497 of the Railway Review, Sept. 7, 1895, bearing illustration and description of Vulcan "Back-Action" Shovel, manufactured in accordance with Webber Patent No. 557,350	483	W
No. 24.	U. S. Patent No. 1,317,431, Sept. 30, 1919, to LeRoy P. Clutter for Ditching or Excavating Machine	572	201
No. 25.	U. S. Patent No. 1,107,899, Aug. 18, 1914, to L. P. Clutter for Excavator	575	203

		Offered Vol. I	Printed Vol. III
No. 26.	Sketch of Drop Bottom Skimmer Scoop, attached to Keystone Instroke Ditching Machine and used on Joplin Supply Co. basement excavation at Joplin, Missouri, winter of 1919-20	581	W
No. 27.	Original Letter on Keystone Driller Company's stationery, dated Feb. 20, 1926, addressed to B. R. Clutter, Lakewood, N. J., and signed Rex Downie	582	221
No. 28.	Financial Statement between Wallower Bros. and C. A. Dieter, dated March 18, 1920, for excavation work on Joplin Supply Co. Bldg., Joplin, Missouri	598	222
No. 29.	U. S. Patent No. 1,056,268, March 18, 1913, to J. G. Fairbanks for Excavating Apparatus	497	225
No. 30.	Fairbanks Steam Shovel Catalog, Copyrighted 1912	499	W
No. 31.	Blue-Print No. 315, of Fairbanks Steam Company's Back Action Shovel	499	W
No. 32.	Fairbanks Steam Shovel Company's Shop Order No. 185, dated Jan. 27, 1910	502	235
No. 33.	Fairbanks Steam Shovel Company's Shop Order No. 188, March 9, 1910, for Back Action Shovel Shipped to George A. Castle, Polk County, Minnesota	503	236
No. 34.	Tracing showing interference between connecting bar 19 and boom of machine made and sold by the Keystone Driller Co.	517	237
No. 35.	Keystone Driller Company Drawing P48	517	W
No. 36.	Keystone Driller Company catalog consisting of outside cover page, inside title page (1) bearing the title Bulletin 901, 4th Edition January 1917, and pages 7 and 9 thereof	518	W

		Offered Vol. II	Printed Vol. III
No. 37.	Keystone Driller Letter March 16, 1925, to Clutter Contracting Company, enclosing Invoice and Bill of Lading	741	239

		Offered Vol. II	Printed Vol. III
No. 38.	Keystone Driller Co. Letter to Mr. Burn Clutter, dated November 23, 1928	748	243
No. 39.	Keystone Driller Co. Letter to Mr. Burn R. Clutter, dated December 4, 1928	750	244
No. 40.	Keystone Driller Co. Letter, to Burn R. Clutter, dated December 17, 1928	753	246
No. 41.	Keystone Bill of Lading, dated July 14, 1925 to Clutter Contracting Co. of Tuckerton, N. J.	763	247
No. 42.	Front Cover, inside page of front cover and page 4 of Brown Hoisting Machinery Company booklet No. 10, copyrighted 1924	681	W
No. 43.	The Brown Hoisting Machinery Company blue print 144,566, dated 4-13-22, general drawing of one yard shovel bucket	682	W
No. 44.	Industrial Brown Hoist Corporation blueprint 144,515, dated April 4, 1922, teeth for one yard shovel bucket	682	W
No. 45.	Brown Hoisting Machinery Corporation pattern No. 29332-1 for right-hand side rake tooth shown on Defendants' Exhibit 44	683	W
No. 45-A.	Photograph of Pattern of Exhibit 45	696	W
No. 46.	Brown Hoist Machinery Company blueprint 150,495, dated May 19, 1924, entitled general drawing of one-half yard shovel bucket	684	W
No. 47.	Brown Hoisting Machinery Company blueprint 150,499, dated June 12, 1924, entitled side teeth for one-half yard shovel bucket	684	W
No. 48.	Brown Hoisting Machinery Company blueprint 150,497, dated May 17, 1924, entitled door for one-half yard shovel bucket	684	W
No. 49.	Brown Hoisting Machinery Company pattern No. 30835/1	685	W
No. 49-A.	Photograph of Pattern of Exhibit 49	696	W
No. 50.	Brown Hoisting Machinery Company Invoice No. 14012, dated April 26, 1922, to the American Manganese Steel Company for side rake teeth 29332/1 29333/1	689	249

		Offered Vol. II	Printed Vol. III
No. 51.	Brown Hoisting Machinery Company Invoices 37,886 and B-2170, dated June 27, 1924, for side rake tooth 30835/1 on Brown Hoisting Machinery Company Order 200,370	691	255
No. 52.	Invoice Sheet 2788 and Account Book page No. 2 of The Brown Hoisting Machinery Company, referring to Order D-4804 to S. G. Cool	693	255
		Offered Vol. I	Printed Vol. III
No. 53.	U. S. Patent No. 579,589, March 30, 1897, to G. W. King for Steam Shovel or Excavator	508	265
No. 54.	Front Cover, page opposite the title page bearing the date 1900, the title page, page 55, and the page opposite page 55, bearing the illustration of Marion Steam Shovel Catalogue dated 1900	511	W
No. 55.	Illustration of Marion Steam Shovel Company back action shovel in Charleston, South Carolina, phosphate fields	512	W
		Offered Vol. II	Printed Vol. III
No. 56.	Photograph of dipper bucket of a Thew Shovel located at Star Road and Flanagan Pike, Columbus, Ohio	653	W
No. 57.	Photograph of Thew Steam Shovel located at Star Road and Flanagan Pike, Columbus, Ohio	653	W
No. 58.	Contract, dated Oct. 11, 1916, between Thew Automatic Shovel Company, Lorain, Ohio, and the North West Boulevard Company, Columbus, Ohio, and memorandum bill of lading covering the shovel referred to in said contract	655	W
No. 59.	Tracing of dipper bucket and ditcher stick, shown in Defendants' Exhibits 56 and 57	658	W
No. 60.	Thew Automatic Shovel Company's Circular No. 26	659	W
		Offered Vol. I	Printed Vol. III
No. 61.	Drawing of Hoisting Mechanism	558	W

No. 62. Prior Art Patents and Patents in Suit:
(Offered on Page 558 of Vol. I)

				Printed Vol. III
(1)	7,340	Davis	May 7, 1850	281
(2)	77,949	Barnes	May 19, 1868	285
(3)	251,394	White	Dec. 27, 1881	289
(4)	254,563	Osgood	Mar. 7, 1882	293
(5)	323,538	Simmerly	Aug. 4, 1885	303
(6)	367,567	White	Aug. 2, 1887	317
(7)	386,438	Rood	July 17, 1888	323
(8)	418,311	Cross	Dec. 31, 1889	341
(9)	427,260	Forter	May 6, 1890	347
(10)	453,087	Milliken	May 26, 1891	357
(11)	477,933	Hennebery	June 28, 1892	361
(12)	493,421	Butler	Mar. 14, 1893	369
(13)	495,040	Hulett	Apr. 11, 1893	375
(14)	496,428	Morgan	May 2, 1893	383
(15)	508,685	Davy	Nov. 14, 1893	397
(16)	514,645	Davy	Feb. 13, 1894	401
(17)	519,835	Butler	May 15, 1894	407
(18)	528,312	Webber	Oct. 30, 1894	413
(19)	Re 11,516	Davy	Dec. 3, 1895	421
(20)	557,350	Webber	Mar. 31, 1896	429
(21)	579,589	King	Mar. 30, 1897	429
(22)	580,494	King	Apr. 13, 1897	431
(23)	589,565	King	Sept. 7, 1897	443
(24)	629,695	Knight	July 25, 1899	459
(25)	645,175	Libbe	Mar. 13, 1900	471
(26)	650,991	Robinson	June 5, 1900	485
(27)	659,632	Hetlesaeter	Oct. 9, 1900	493
(28)	665,682	Hetlesaeter	Jan. 8, 1901	503

				Printed Vol. III
(29)	670,210	Shannon	Mar. 19, 1901	511
(30)	674,417	Howard	May 21, 1901	521
(31)	708,658	Osgood	Sept. 9, 1902	525
(32)	709,733	Barton et al.	Sept. 23, 1902	539
(33)	711,449	Williams	Oct. 14, 1902	553
(34)	711,992	Mason	Oct. 28, 1902	557
(35)	716,538	Harrison	Dec. 23, 1902	561
(36)	741,099	Bisbee	Oct. 13, 1903	565
(37)	745,329	Coffey	Dec. 1, 1903	593
(38)	776,125	Dutton	Nov. 29, 1904	597
(39)	806,288	Pugh	Dec. 5, 1905	603
(40)	808,345	Cross	Dec. 26, 1905	635
(41)	809,436	Ferris	Jan. 9, 1906	643
(42)	820,055	Libbe	May 8, 1906	647
(43)	822,529	Libbe	June 5, 1906	661

(Defendants' Exhibit No. 62 Continued in Vol. IV).

PLAINTIFF'S INTERROGATORY EXHIBITS.

Cases 964 and 965.

The Exhibits referred to on this and the ensuing page, and which are bound into this volume as pages 1 to 90 inclusive are described herewith, owing to the difficulty of printing the proper designation on the Exhibits themselves.

CASE 964.

Plaintiff's Interrogatories (filed Feb. 9, 1929)

	Offered Vol. I	Printed Vol. III
Exhibit 1. General Excavator Catalogue—Bulletin No. 2703	18	1
Exhibit 2. General Excavator Catalogue—Bulletin No. 2805	18	13
Affidavit of Robert Rex Downie (Filed Feb. 9, 1929) Photographs Illustrating Defendant's Machine in Operation:		
Exhibit 7. Photograph	25	37
Exhibit 8. Photograph	25	37
Exhibit 9. Photograph	25	37
Exhibit 10. Photograph	25	37
Exhibit 11. Photograph	25	39
Exhibit 12. Photograph	25	39
Exhibit 13. Photograph	25	39
Exhibit 14. Photograph	25	39
Exhibit 15. Photograph	25	41
Exhibit 16. Photograph	25	41
Exhibit 17. Photograph	25	41
Exhibit 18. Photograph	25	41
Exhibit 19. Photograph	25	43
Exhibit 20. Photograph	25	43
Exhibit 21. Photograph	25	43
Exhibit 22. Photograph	25	43

CASE 965.

Plaintiff's Interrogatories (filed Feb. 9, 1929)

	Offered Vol. I	Printed Vol. III
Exhibit 1. Osgood Catalogue—Bulletin No. 2620	105	45
Exhibit 2. Osgood Catalogue—Bulletin No. 2624	105	73
Exhibit 3. Illustrations from Illustrated Newspaper entitled "The Osgood Pictorial News" —		
(a) Photograph of "An Osgood Gasoline Back Hoe, engaged in excavating a section of the New York subway. Moranti & Raymond of New York City are the owners"	105	77
(b) Photograph of a Back Hoe, inscribed: "Here's the way an Osgood Back Hoe looks from position in trench in front of the machine. Owned by Gjellefats & Chapman, of Chicago, Ill., and engaged on a sewer job"	105	79
Exhibit 8. Large photograph of Excavator	105	81

Plaintiff's Interrogatories (filed Oct. 21, 1929)

Photographs of Excavator

Exhibit 1. Photograph	157	83
Exhibit 2. Photograph	157	83
Exhibit 3. Photograph	157	83
Exhibit 4. Photograph	157	83
Exhibit 5. Photograph	157	85
Exhibit 6. Photograph	157	85
Exhibit 7. Photograph	157	85
Exhibit 8. Photograph	157	85
Exhibit 9. Photograph	157	87
Exhibit 10. Photograph	157	87
Exhibit 11. Photograph	157	87
Exhibit 12. Photograph	157	87
Exhibit 13. Photograph	157	89

PLAINTIFF'S EXHIBIT NO. P-6.

Stipulation dated Feb. 25, 1931, and filed in Case No. 965.

(Filed May 16, 1931.)

[Cases Nos. 964 and 965]

STIPULATION.

It is hereby stipulated and agreed by and between counsel in the above-entitled cause, this Honorable Court consenting,

1. That the Keystone Driller Company, Plaintiff herein, is now and was at the time of filing the Bill of Complaint in the above-entitled suit, the owner of the full right, title and interest in and to the following patents:

No. 1,317,431, Sept. 30, 1919, Le Roy P. Clutter
No. 1,511,114, Oct. 7, 1924, R. R. Downie
No. 1,543,250, June 23, 1925, R. R. Downie;

2. That the Keystone Driller Company, Plaintiff herein, is now and was at the time of filing the Supplemental Bill of Complaint in the above-entitled suit, the owner of the full right, title and interest in and to the following patents:

No. 1,709,466, April 16, 1929, R. R. Downie
No. 1,716,432, June 11, 1929, R. R. Downie;

3. That the catalogs, bulletin Nos. 2620 and 2624 were issued and distributed by the Defendant, The Osgood Company.

4. That the Defendant, The Osgood Company, made and/or used, and/or sold Back-Hoe Machines like those illustrated and described on pages 20 and 21 and illustrated on page 23 of catalog, bulletin No. 2620 of The Osgood Company marked Exhibit 1 and attached to Plaintiff's interrogatories, filed February 9, 1929, and the Back-Hoe Machines illustrated in Exhibit 3 attached to Plaintiff's interrogatories filed February 9, 1929, and the Back-Hoe Machine illustrated in Exhibit 8 attached to Plaintiff's Interrogatories filed February 9, 1929, and the Back-Hoe Machine illustrated and described in Plaintiff's Exhibit 9 attached to the Reply Affidavit of R. R. Downie, dated April 15, 1929, between June 23, 1925, and February 9, 1929. Copies of the aforesaid exhibits are attached hereto.

5. That the Defendant, The Osgood Company, made and/or used, and/or sold Back-Hoe Excavator Scoops and Back-Hoe Excavator Scoop Assemblies like those illustrated and described on pages 20 and 21 and illustrated on page 23 of catalog, bulletin No. 2620 of The Osgood Company marked Exhibit 1 and attached to Plaintiff's interrogatories, filed February 9, 1929, and the Back-Hoe Machine illustrated in Exhibit 3 attached to Plaintiff's interrogatories, filed February 9, 1929, and the Back-Hoe Machines illustrated in Exhibit 8 attached to Plaintiff's interrogatories filed February 9, 1929, and the Back-Hoe Machine illustrated and described in Plaintiff's Exhibit 9 attached to the Reply Affidavit of R. R. Downie, dated April 15, 1929, between June 11, 1929, and August 23, 1929. Copies of the aforesaid exhibits are attached hereto.

6. That uncertified printed copies of the patents in suit in the above-entitled case may be used with the same force and effect in this case as original or certified copies.

CORBETT & MAHONEY,
Counsel for Defendant.

February 25, 1931.

RICHEY & WATTS,
Counsel for Plaintiff.

February 26, 1931.

PRINTER'S NOTE:

Plaintiff's Exhibit No. 1, attached to the foregoing Stipulation, consisted of photostat reproductions of pages 20, 21 and 23 of Osgood Bulletin 2620, which has been included hereinabove, being one of the catalogs (Exhibit 1) attached to Plaintiff's Interrogatories, filed February 9, 1929, in Case No. 965, said pages have accordingly been omitted. (See pages 66, 67 and 69 of Exhibits, Vol. III.)

Plaintiff's Exhibit No. 3 attached to the foregoing Stipulation consisted of a photostatic reproduction of one of the photographs in the Illustrated Paper entitled: "The Osgood Pictorial News", which has been included hereinbefore, being one of the catalogs (Exhibit 3) attached to Plaintiff's Interrogatories filed Feb. 9, 1929, in case No. 965. Said reproduction has accordingly been omitted. The picture in "The Osgood Pictorial News", was described as "An Osgood Gasoline Back Hoe, engaged in excavating a section of the New York Subway. Moranti & Raymond of New York City are the owners." (See page 77 of Exhibits, Vol. III.)

Plaintiff's Exhibit No. 8, attached to the foregoing Stipulation, consisted of a photostat reproduction of a photograph of an Excavator working in rock and numbered No. 3364, which has been included hereinabove, being one of the Exhibits (Exhibit 8) attached to Plaintiff's Interrogatories filed Feb. 9, 1929, in Case No. 965. Said reproduction has accordingly been omitted. (See page 81 of Exhibits, Vol. III.)

Plaintiff's Exhibit No. 9, attached to the foregoing Stipulation, consisted of a photostat reproduction of an Excavator. A reproduction of it appears following.

PLAINTIFF'S EXHIBIT NO. P-7.

Certified Copy of the Decree on Motion for Preliminary Injunction in Keystone Driller Co. vs. Day & Maddock Co., Equity 3617, Jan. 23, 1931, Cleveland Docket.

(Filed May 16, 1931.)

[Cases Nos. 964 and 965]

THE UNITED STATES OF AMERICA,
NORTHERN DISTRICT OF OHIO,
EASTERN DIVISION, SS.

At a stated term of the District Court of the United States, within and for the Eastern Division of the Northern District of Ohio, begun and held at the City of Cleveland, in said District, on first Tuesday in October, being the 7th day of said month, in the year of our Lord one thousand nine hundred and Thirty, and of the Independence of the United States of America, one hundred and Fifty-fifth, to wit: on Friday, the 23 day of January A. D. 1931. Present: Honorable Paul Jones, United States District Judge. Among the proceedings then and there had were the following, to-wit:

[Caption Omitted]

DECREE.

This cause coming on to be heard at this term of the Court, upon the motion for a preliminary injunction presented by the Plaintiff, and thereupon, upon consideration thereof, it is

Ordered, Adjudged and Decreed, as follows:

1. That Letters Patent of the United States, No. 1,317,431 on the invention of Le Roy P. Clutter for Ditching or Excavating Machines are good and valid in law as to claim 4 thereof, and Letters Patent of the United States, No. 1,476,121 on the invention of G. E. Wagner *et al.* for Excavating Scoop are good and valid in law as to claims 6 and 7 thereof, and Letters Patent of the United States, No. 1,511,114 on the invention of Robert Rex Downie for Excavating Machine are good and valid in law as to all the claims thereof.

2. That the title to said Letters Patent No. 1,317,431, No. 1,476,121 and No. 1,511,114, and each of them, is vested in the Plaintiff, Keystone Driller Company.

3. That the Defendant, The Day & Maddock Company, have infringed upon said Letters Patent Nos. 1,317,431, 1,476,121, and 1,511,114, and have violated the exclusive rights of the Plaintiff thereunder by making, and/or using, and/or vending Excavating Machines embodying a Back Hoe of the type illustrated in the catalog of The Day & Maddock Company identified as "Contractors' Equipment" on pages 127 and 132 and the Back Hoe illustrated in the advertisement of Northwest Engineering Co. which appeared in the July, 1929 issue of "Construction Methods."

4. That a Writ of Injunction issue out of and under the seal of this Court directed to the Defendant, The Day & Maddock Company, pending this suit, enjoining and restraining the Defendant, its officers, agents, servants, employees, associates and confederates, and all those in active concert or participation with them from directly or indirectly making, and/or using, and/or vending excavating devices embodying a Back Hoe of the type illustrated in the catalog of The Day & Maddock Company identified as "Contractors' Equipment" on pages 127 and 132 and the Back Hoe illustrated in the advertisement of Northwest Engineering Co. which appeared in the July, 1929 issue of "Construction Methods", and the further advertisement of Northwest Engineering Co. which appeared in the July, 1928 issue of "Construction Methods," and any device embodying said patented inventions, and from offering or advertising so to do, and from aiding and abetting, or in any way contributing to the infringement of said Letters Patent, and each of them, and particularly as to claim 4 of Patent No. 1,317,431, claims 6 and 7 of Patent No. 1,476,121, and as to all of the claims of Patent No. 1,511,114. Issue of Writ of Injunction conditioned upon the Plaintiff giving bond in the sum of $3,000.00.

JONES,
United States District Judge.

Cleveland, Ohio
January 23, 1931.

We approve the above Decree as to form.

....,
Counsel for Defendant.

THE UNITED STATES OF AMERICA
NORTHERN DISTRICT OF OHIO
EASTERN DIVISION

I, F. J. DENZLER, Clerk of the District Court of the United States within and for said District, do hereby certify that I have compared the within and foregoing transcript with the original Decree on Motion for Preliminary Injunction entered upon the Journal of the proceedings of said Court in the therein-entitled cause, at the term and on the day therein named, and do further certify that the same is a true, full, and complete transcript and copy thereof.

WITNESS my official signature, and the seal of said Court at Cleveland, in said District, this 25th day of February, A. D. 1931, and the 155th year of the Independence of the United States of America.

F. J. DENZLER,
Clerk,

(Seal)

By W. L. STEVENS,
Deputy Clerk.

PLAINTIFF'S EXHIBIT NO. P-8.

Certified Copy of Final Decree by Consent in Keystone Driller Co. vs. Thew Shovel, No. 3616, Cleveland Docket.

(Filed May 16, 1931.)

[Cases Nos. 964 and 965]

THE UNITED STATES OF AMERICA,
NORTHERN DISTRICT OF OHIO,
EASTERN DIVISION, SS:

At a stated term of the District Court of the United States, within and for the Eastern Division of the Northern District of Ohio, begun and held at the City of Cleveland, in said District, on first Tuesday in October, being the 7th day of said month, in the year of our Lord one thousand nine hundred and thirty, and of the Inde-

pendence of the United States of America the one hundred and fifty-fifth, to-wit: on Tuesday, the 13th day of January, A. D. 1931. Present: Honorable ...., United States District Judge. Among the proceedings then and there had were the following, to-wit:

[Caption Omitted]

FINAL DECREE BY CONSENT.

It appearing to the Court that the bill in equity in the above entitled cause was filed in this Court on the 11th day of December, 1930, and a subpoena issued and duly served on the Defendant as required by law, and the Defendant not desiring to defend this cause, and an agreement having been entered into between the parties herein, in which Defendant has agreed to the entry of this consent decree, it is hereby ordered, adjudged and decreed as follows, viz:

1—That Letters Patent of the United States to Le Roy P. Clutter No. 1,317,431, dated September 30, 1919 for Ditching or Excavating Machine is good and valid in law as to claim 4 thereof; that the inventor, Le Roy P. Clutter named in the said patent was the first, true and original inventor of the invention, improvement and combination described in claim 4; and that the Plaintiff, Keystone Driller Company, is the lawful owner of the entire right, title and interest in and to said invention and in and to the Letters Patent therefor as aforesaid;

2—That Letters Patent of the United States to G. E. Wagner, et al., No. 1,476,121, dated December 4, 1929, for Excavating Scoop is good and valid in law as to claims 6 and 7 thereof; that the inventors, G. E. Wagner, et al., named in the said patent, were the first, true, original and joint inventors of the inventions, improvements and combinations described in claims 6 and 7 thereof; and that the Plaintiff, the Keystone Driller Company, is the lawful owner of the entire right, title and interest in and to the Letters Patent therefor as aforesaid;

3—That the Defendant, The Thew Shovel Company, has infringed upon said Letters Patent within the Northern District of Ohio, Eastern Division, and elsewhere in the United States, by the manufacture, sale and/or use of Ditching or Excavating Machines, Excavating Scoops and Excavating Machines employing and/or embodying the inventions set forth in the claims of

certain of said patents, and particularly upon claim 4 of patent No. 1,317,431 by the manufacture, sale and/or use of machines illustrated on pages 22, 23, 24, 34 and the upper figure only of 35 of the catalog marked Plaintiff's Exhibit 1 and in the advertisement of The Thew Shovel Company in the February, 1930 issue of the magazine "Construction Methods", marked Plaintiff's Exhibit 2, and the advertisement of The Thew Shovel Company in the November 27, 1930 issue of "Engineering News-Record" page 26 and the lower right-hand view only of page 27, marked Plaintiff's Exhibit 3; and the Defendant, The Thew Shovel Company, has infringed upon said Letters Patent within the Northern District of Ohio, Eastern Division, and elsewhere in the United States, by the manufacture, sale, and/or use of Ditching or Excavating Machines, Excavating Scoops and Excavating Machines employing and/or embodying the inventions set forth in the claims of certain of said patents and particularly upon claims 6 and 7 of Patent No. 1,476,121 by the manufacture, sale and/or use of the machines illustrated on pages 22, 23, 24, 34 and the upper figure only of 35 of the catalog marked Plaintiff's Exhibit 1 and in the advertisement of The Thew Shovel Company in the February, 1930 issue of the magazine "Construction Methods", marked Plaintiff's Exhibit 2, and the advertisement of The Thew Shovel Company in the November 27, 1930 issue of "Engineering News-Record," page 26 and the lower right-hand view only of page 27, marked Plaintiff's Exhibit 3;

4—That it having been represented to the Court that the parties have agreed in a contract executed contemporaneously herewith that the Plaintiff recover from the Defendant, The Thew Shovel Company, a certain definite sum for all profits, gains and advantages which the Defendant has derived, received or made by reason of the said infringement, or damages which the Plaintiff has sustained, no accounting is ordered;

5—That an injunction be issued out of and under the seal of this Court directed to the Defendant, The Thew Shovel Company, and its officers, servants, agents, employees and workmen, and all their privies and each and every one of them, enjoining and restraining them during the remainder of the respective terms of said Letters Patent No. 1,317,431 and 1,476,121, from directly or indirectly constructing, or causing to be constructed, and/or using, and/or selling, or causing to be used or sold,

or advertising for sale, ditching or excavating machines and excavating scoops like apparatus illustrated in Plaintiff's Exhibits 1, 2 and 3, and any other apparatus, articles, devices or parts, and/or combinations, containing, employing or embodying the inventions and improvements described in said Letters Patent No. 1,317,431 and particularly referred to in claim 4 thereof and No. 1,476,121 and particularly referred to in the claims 6 and 7 thereof, or any of them, or apparatus article, devices, ditching or excavating machines or excavating scoop to be used, or capable only of use, in a combination infringing any of said patents, and from infringing and contributing to infringement upon or violating any of said Letters Patent in any way whatsoever without the license of Plaintiff.

6—That in view of the permanent injunction hereinbefore provided, the Plaintiff's Motion for a Preliminary Injunction is hereby overruled without prejudice.

Cleveland, Ohio, January 13, 1931.

JONES,
United States District Judge.

We consent to the entry of the above Decree.

RICHEY & WATTS,
Counsel for Plaintiff.

BROCKETT, HYDE, HIGLEY & MYERS,
Counsel for Defendant.

THE UNITED STATES OF AMERICA
NORTHERN DISTRICT OF OHIO
EASTERN DIVISION

I, F. J. DENZLER, Clerk of the District Court within and for said District, do hereby certify that I have compared the within and foregoing transcript with the original Final Decree by Consent entered upon the Journal of the proceedings of said Court in the therein-entitled cause, at the term and on the day therein named, and do further certify that the same is a true, full, and complete transcript and copy thereof.

WITNESS my official signature, and the seal of said Court at Cleveland, in said District, this 25th day of February, A. D. 1931, and the 155th year of the Independence of the United States of America.

F. J. DENZLER, *Clerk,*
(Seal) By W. L. STEVENS, *Deputy Clerk.*

PLAINTIFF'S EXHIBIT P-9.

Certified Copy of Final Decree in Keystone Driller Co. vs. Byers Machine Co., Equity No. 2084, Cleveland Docket.

(Filed May 16, 1931.)

[Cases Nos. 964 and 965]

THE UNITED STATES OF AMERICA,
NORTHERN DISTRICT OF OHIO,
EASTERN DIVISION, ss:

At a stated term of the District Court of the United States, within and for the Eastern Division of the Northern District of Ohio, begun and held at the City of Cleveland, in said District, on first Tuesday in October, being the 2nd day of said month, in the year of our Lord one thousand nine hundred twenty-eight, and of the Independence of the United States of America, to-wit: on Thursday, the 31st day of January, A. D., 1929. Present: Honorable Paul Jones, United States District Judge. Among the proceedings then and there had were the following, to-wit:

[Caption Omitted]

FINAL DECREE.

This cause came on to be further heard at this term, and was argued by counsel; and thereupon, upon consideration thereof, it was ordered, adjudged and decreed as follows, viz:

(1) That Letters Patent of the United States to LeRoy P. Clutter, No. 1,317,431, dated September 30, 1919, for Ditching or Excavating Machine, is good and valid in law as to claim 4 thereof; that the inventor, LeRoy P. Clutter, named in the said patent was the first, true and original inventor of the invention, improvement and combination described in said claim 4; and that the Plaintiff, Keystone Driller Company, is the lawful owner of the entire right, title and interest in and to said invention and in and to the Letters Patent therefor as aforesaid;

That Letters Patent of the United States to G. E. Wagner, et al., No. 1,476,121, dated December 4, 1923, for Excavating Scoop, is good and valid in law as to claims 6 and 7 thereof; that the inventors, G. E. Wagner, et al., named in the said patent, were the first, true, orig-

inal and joint inventors of the inventions, improvements and combinations described in claims 6 and 7 of said patent; and that the Plaintiff, the Keystone Driller Company, is the lawful owner of the entire right, title and interest in and to said inventions and in and to the Letters Patent therefor as aforesaid;

That Letters Patents of the United States to Robert Rex Downie, No. 1,511,114, dated October 7, 1924, and No. 1,543,250, dated June 23, 1925, for Excavating Machines, are good and valid in law as to all the claims of each patent thereof; that the inventor, Robert Rex Downie, named in the said patents was the first, true and original inventor of the inventions, improvements and combinations described in the said patents and in said claims; and that the Plaintiff, the Keystone Driller Company, is the lawful owner of the entire right, title and interest in and to said inventions and in and to the said Letters Patents therefor as aforesaid;

That the Defendant, The Byers Machine Company, has infringed upon said Letters Patent within the Northern District of Ohio, Eastern Division, and elsewhere in the United States, by the manufacture, sale and/or use of Ditching or Excavating Machines, Excavating Scoops and Excavating Machines employing and/or embodying the inventions set forth in the claims of certain of said patents, and particularly upon claim 4 of Patent No. 1,317,431 by the manufacture, sale and/or use of machines illustrated on pages 2, 10 and 11 and elsewhere in Exhibit 16 and upon pages 2, 6, 14, 16, 17, 18, 19, 50 and 58 and elsewhere in Exhibit 17; all of the claims of Patent No. 1,511,114 by the manufacture, sale and/or use of the machines illustrated on pages 2, 10 and 11 and elsewhere in Exhibit 16 and upon pages 2, 6, 14, 16, 17, 18, 19, 50 and 58 and elsewhere in Exhibit 17; and all of the claims of Patent No. 1,543,250 by the manufacture, sale and/or use of the machines illustrated on pages 2, 10 and 11 and elsewhere in Exhibit 16 and upon pages 2, 6, 14, 16, 17, 18, 19, 50 and 58 and elsewhere in Exhibit 17; and the Defendant, Byers Machine Company, has infringed upon said Letters Patents within the Northern District of Ohio, Eastern Division, and elsewhere in the United States, by the manufacture, sale and/or use of Ditching or Excavating Machines, Excavating Scoops and Excavating Machines employing and/or embodying the inventions set forth in the claims of certain of said patents, and particularly upon claims 6 and 7 of Patent

No. 1,476,121 by the manufacture, sale and/or use of the machines illustrated on pages 8, 9, 21, 22, 23, 24, 26 and 50 and elsewhere in Exhibit 18; and claims 6 to 14, both inclusive of patent 1,511,114, by the manufacture, sale and/or use of the machines illustrated on pages 8, 9, 21, 22, 23, 24, 26 and 50 and elsewhere in Exhibit 18; and Byers Machine Company is threatening to infringe claim 4 of said Clutter patent, No. 1,317,431 and claims 1 to 5, inclusive, of said Downie patent, No. 1,511,114 by offering to sell and/or use machines like those illustrated in the said pages of Exhibits 16 and 17; and The Byers Machine Company is threatening to infringe claims 6 and 7 of the patent to Wagner, et al., No. 1,476,121 by offering to sell and/or use machines like those illustrated in the said pages of Exhibit No. 18;

(2) That the Plaintiff do recover from each of the Defendants, The Byers Machine Company and Byers Machine Company, all profits, gains and advantages which the said Defendants, have or shall have derived, received or made by reason of said infringements, and that the Plaintiff do recover from each of said Defendants any and all damages which the Plaintiff has sustained, or shall sustain by reason of said infringement by said Defendants.

(3) That this cause be, and the same is hereby referred to ..... Esq., a Master, to ascertain the amount of such gains and profits and the amount of damages sustained by said Plaintiff by reason of such infringement; that the Defendants file their respective accounts with said Master in accordance with the Rules of Equity of the Supreme Court of the United States relevant thereto; that on such accounting the Plaintiff shall have the right to cause an examination of the officers, servants, agents, and employees of the Defendants and of each of them orally or otherwise, and also to cause the production of Defendants' books, vouchers, accounts, bills of lading, shop orders, and all documents relating to the manufacture of ditchers and parts thereof by Defendants and each of them, and that said Defendants, through their representatives, attend for such purpose before the Master from time to time as said Master shall direct; and that all testimony and exhibits offered and used in this cause on behalf of either party may be referred to and used in such accounting;

(4) That an injunction be issued out of and under the seal of this Court direct to the Defendants, The Byers

Machine Company and Byers Machine Company, and each of them, and each of their officers, servants, agents, employees and workmen, and all their privies, and each and everyone of them, enjoining and restraining them during the remainder of the respective terms of said Letters Patents, No. 1,317,431, No. 1,476,121, No. 1,511,114 and No. 1,543,250, from directly or indirectly constructing, or causing to be constructed, and/or using, and/or selling, or causing to be used or sold, or advertising for sale, ditching or excavating machines and excavating scoops like apparatus illustrated in Plaintiff's Exhibit 16, page 2, the lower figure thereon, page 10, the left figure thereon and page 11 and elsewhere in the exhibit, Plaintiff's Exhibit 17, page 2, the lower left figure thereon, page 6, the uppermost figure thereon, page 14, pages 16, 17, 18, 19, 50 and 58 and elsewhere in the exhibit, Plaintiff's Exhibit 18, pages 8, 9, 21, 22, 23, 24, 26 and 50 and elsewhere in the exhibit, and any other apparatus, articles, devices or parts, and/or combinations, containing, employing or embodying the inventions and improvements described in said Letters Patents, No. 1,317,431 and particularly referred to in claim 4 thereof, and No. 1,476,121, and particularly referred to in claims 6 and 7 thereof, and No. 1,511,114 and No. 1,543,250 and particularly referred to in the claims thereof or any of them, or apparatus article, devices, ditching or excavating machines or excavating scoop to be used, or capable only of use, in a combination infringing any of said patents, and from infringing and contributing to infringement upon or violating any of said Letters Patent in any way whatsoever.

(5) That the Plaintiff recover from the Defendants, the Plaintiff's full costs in this suit to be taxed and to have execution therefor.

Entered this 31st day of January, 1929.

PAUL JONES,
United States District Judge.

Approved as to form this 30th day of January, 1929.

FAY, OBERLIN & FAY,
Attorneys for Defendants.

THE UNITED STATES OF AMERICA
NORTHERN DISTRICT OF OHIO
EASTERN DIVISION

I, F. J. DENZLER, Clerk of the District Court of the United States within and for said District, do hereby certify that I have compared the within and foregoing transcript with the original Final Decree entered upon the Journal of the proceedings of said Court in the therein-entitled cause, at the term and on the day therein named, and do further certify that the same is a true, full, and complete transcript and copy thereof.

WITNESS my official signature, and the seal of said Court at Cleveland, in said District, this 25th day of February, A. D. 1931, and the 155th year of the Independence of the United States of America.

F. J. DENZLER,
Clerk,

By W. L. STEVENS,
Deputy Clerk.

PLAINTIFF'S EXHIBIT NO. P-10.

Certified Copy of Interlocutory Decree in Keystone vs. Bay City Shovel, Inc., Equity No. 205, Eastern District of Michigan, Northern Division.

(Filed May 16, 1931.)

[Cases Nos. 964 and 965]

[Caption Omitted]

INTERLOCUTORY DECREE.

It appearing to the Court that the Bill in Equity in the above entitled cause was filed in this Court on the

24th day of December, 1926, and a subpoena issued and duly served on the defendant as required by law, and the patents in suit having been sustained by the District and Circuit Courts of Appeal, and the defendant not desiring to contest the issue of infringement or the validity of the patent in suit, and this decree being assented to by the parties, this Court does hereby order, adjudge and decree as follows:

1. That Letters Patent of the United States to Le Roy P. Clutter, No. 1,317,431, dated September 30, 1919, for Ditching or Excavating Machine, is good and valid in law as to claim 4 thereof; that the inventor, Le Roy P. Clutter, named in the said patent was the first, true and original inventor of the invention, improvement and combination described in said claim 4; and that the plaintiff, Keystone Driller Company, is the lawful owner of the entire right, title and interest in and to said invention and in and to the Letters Patent therefore as aforesaid;

That Letters Patent of the United States to Robert Rex Downie, No. 1,511,114, dated October 7, 1924, and No. 1,543,250 dated June 23, 1925, for Excavating Machines are good and valid in law as to all the claims of each patent thereof; that the inventor, Robert Rex Downie, named in the said patents was the first, true and original inventor of the inventions, improvements and combinations described in the said patents and in said claims; and that the Plaintiff, the Keystone Driller Company, is the lawful owner of the entire right, title and interest in and to said inventions and in and to the said Letters Patents therefor as aforesaid;

That the Defendant, Bay City Shovels, Inc., has infringed upon said Letters Patent within the Eastern District of Michigan, Northern Division, and elsewhere in the United States, by the manufacture, sale and/or use of Ditching or Excavating Machines and Excavating Scoops employed and/or embodying the inventions set forth in the claims of certain of said patents, and particularly upon claim 4 of Patent No. 1,317,431 by the manufacture, sale, and/or use of Back Digging Excavating Machines illustrated in Exhibits 1 to 6 inclusive, and particularly on pages 8, 9, 10, 11, 12 and elsewhere in Bay City Dredge Works catalog No. 25 (Exhibit 1); pages 6 and 7 and elsewhere in Bay City Dredge Works catalog R-2 (Exhibit 2); pages 11, 12, 17 and elsewhere in Bay City

Shovels, Inc. catalog T-5 (Exhibit 3); pages 14, 17, 18, 19 and elsewhere in Bay City Shovels, Inc. catalog K-3 (Exhibit 4); advertisement of Bay City Shovels, Inc. which appeared in the March, 1930 issue of "Construction Methods" (Exhibit 5), and the advertisement of Bay City Shovels, Inc. which appeared in the August, 1930 issue of "Construction Methods" (Exhibit 6); all of the claims of Patent No. 1,511,114 by the manufacture, sale and/or use of the Back Digging Excavating Machine illustrated on page 8 and elsewhere of Exhibit 1; page 7 and elsewhere of Exhibit 2; page 12 and elsewhere of Exhibit 3; pages 14, 17, 18 and 19 of Exhibit 4; and Exhibit 5; and all of the claims of Patent No. 1,543,250 by the manufacture, sale and/or use of Back Digging Excavating Machines illustrated on pages 6, 7 and elsewhere in Exhibit 2; pages 12, 17 and elsewhere of Exhibit 3; pages 17, 18 and 19 and elsewhere of Exhibit 4; and Exhibit 5 and Bay City Shovels, Inc. is threatening to infringe claim 4 of said Clutter Patent No. 1,317,431 and all the claims of Patents Nos. 1,511,114 and 1,543,250 and offering to sell and/or use machines like those illustrated in the aforesaid Exhibits 1 to 6 respectively.

2. That the plaintiff do recover from the defendant, Bay City Shovels, Inc. and/or its predecessor, Bay City Dredge Works, all profits, gains and advantages which said defendant has or shall have derived, received or made by reason of said infringements, and/or that the plaintiff do recover from said defendant any and/or all damages which the plaintiff has sustained or shall sustain by reason of said infringements by said defendant and/or reasonable royalties in lieu of same.

3. That this cause be, and the same is hereby referred to William S. Sayre, Esq., a Master, or brought on to be heard before the Honorable Arthur J. Tuttle to ascertain the amount of such gains and profits and/or the amount of damages sustained by said plaintiff by reason of such infringements; and/or reasonable royalties in lieu of same; that the defendant file its account in accordance with the Rule of Equity of the Supreme Court of the United States relative thereto; that on such accounting the Plaintiff shall have the right to cause an examination of the officers, servants, agents and employees of the Defendant, orally or otherwise, and also to cause the production of the Defendant's books, vouchers, accounts, bills of lading, shop orders, and all

documents relating to the manufacture of Ditching or Excavating Machines and parts thereof by the Defendant, and that said Defendant, through its representatives, attend for such purpose before the Court or Master from time to time as said Court or Master shall direct; and that all testimony and exhibits offered and used in this cause on behalf of either party may be referred to and used in such accounting;

4. That an injunction issue out of and under the seal of this Court directed to the Defendant, Bay City Shovels, Inc., their officers, servants, agents, employees and workmen, and all other privies, and each and everyone of them, enjoining and restraining them during the remainder of the respective terms of said Letters Patent Nos. 1,317,431, 1,511,114 and 1,543,250 from directly or indirectly constructing or causing to be constructed, and/or using, and/or selling or causing to be used or sold, or advertising for sale, Ditching or Excavating Machines and Excavating Scoops and apparatus like Back Digging Excavating Machines illustrated in Plaintiff's Exhibits 1 to 6 inclusive and particularly on pages 8, 9, 10, 11, 12 and elsewhere in Bay City Dredge Works catalog No. 25 (Exhibit 1); pages 6 and 7 and elsewhere in Bay City Dredge Works catalog No. R-2 (Exhibit 2); pages 11, 12, 17 and elsewhere of Bay City Shovels, Inc. catalog T-5 (Exhibit 3); pages 14, 17, 18, 19 and elsewhere of Bay City Shovels, Inc. catalog K-3 (Exhibit 4); the advertisement of Bay City Shovels, Inc. which appeared in the March, 1930 issue of "Construction Methods" (Exhibit 5); and the advertisement of Bay City Shovels, Inc. which appeared in the August, 1930 issue of "Construction Methods" (Exhibit 6), and any other apparatus, article, device or parts, and/or combinations containing, employing, or embodying the inventions and improvements described in said Letters Patent No. 1,317,431, and particularly referred to in claim 4 thereof, and No. 1,511,114 and No. 1,543,250, and particularly referred to in all the claims thereof or any of them, or apparatus, article, device, Ditching or Excavating Machines or Excavating Scoop to be used or capable only of use in a combination infringing any of said patents and from infringing or contributing to infringements upon or violating any of said Letters Patent in any way whatsoever.

5. That the Plaintiff recover from the Defendant the Plaintiff's full cost of this suit to be taxed and for execution therefor.

Entered this 9th day of February, 1931.

ARTHUR J. TUTTLE,
United States District Judge.

Approved as to form this 9th day of February, 1931.

GILBERT W. HAND, and
CLARK & HENRY,
Attorneys for Defendants.

We assent to the entry of the above decree.

RICHEY & WATTS,
Counsel for Plaintiff.

GILBERT W. HAND, and
CLARK & HENRY,
Attorneys for Defendant.

UNITED STATES OF AMERICA,
EASTERN DISTRICT OF MICHIGAN, ss:

I, ELMER W. VOORHEIS, Clerk of the United States District Court in and for the Eastern District of Michigan, do hereby certify that the annexed and foregoing is a true and full copy of the original Interlocutory Decree now remaining among the records of the said Court in my office.

IN TESTIMONY WHEREOF, I have hereunto subscribed my name and affixed the seal of the aforesaid Court at Bay City this 20th day of February, A. D. 1931.

ELMER W. VOORHEIS,
Clerk.

(Seal)

By CLARENCE S. PETTIT,
Deputy Clerk.

PLAINTIFF'S EXHIBIT NO. P-11.

Assignments of Patents in Suit to Keystone Driller Co.

(Filed May 16, 1931.)

[Cases Nos. 964 and 965]

ASSIGNMENT.

Liber Y 128 Page 255
1524

WHEREAS, I, Robert Rex Downie, a citizen of the United States and a resident of Beaver Falls, in the County of Beaver and State of Pennsylvania, have invented an Improvement in Ditcher Scoop Assemblies and have executed an application for Letters Patent of the United States of America based thereon this 31st day of Dec. 1926.

AND WHEREAS, Keystone Driller Company, a corporation of Pennsylvania, is desirous of acquiring the entire right, title and interest in and to the said invention in and throughout the United States of America, its Territories, and all countries foreign thereto, and in and to the said application for Letters Patent, and in and to any and all Letters Patent of the United States of America and countries foreign thereto, which have been or may be granted on said invention or any part thereof;

NOW THEREFORE, for one dollar and other good and valuable consideration, receipt of which is hereby acknowledged, I the said Robert Rex Downie have agreed to and do hereby sell, assign and transfer unto the said Keystone Driller Company, the entire right, title and interest in and throughout the United States of America, its Territories and all countries foreign thereto in and to said invention, said application for Letters Patent, and any and all Letters Patent and extensions thereof, of the United States of America and countries foreign thereto, which have been or may be granted on said invention or any part thereof or on said application or any divisional, continuing, renewal, re-issue or other application based in whole or in part thereon, or based upon said invention;

TO BE HELD AND ENJOYED by the said Keystone Driller Company, its ~~heirs, executors, administrators,~~ successors, and assigns to the full ends of the terms for which said Letters Patent or any of them have been or may be granted, as fully and entirely as the same would

have been held and enjoyed by me had no sale and assignment of said interest been made; and I do hereby authorize and request the Commissioner of Patents of the United States of America to issue any and all Letters Patent of the United States of America which may be granted upon the said applications above referred to, or any of them, or upon said invention or any part thereof, to Keystone Driller Company, aforesaid and I hereby agree for myself and for my heirs, executors and administrators, to execute without further consideration any further lawful documents and any further assurances, and any re-issue, renewal, or other application for Letters Patent that may be deemed necessary by the assignee herein named, fully to secure to the said assignee my interest as aforesaid in and to said invention or any part thereof, and in and to said several Letters Patent or any of them.

And I do hereby covenant for myself and my legal representatives and agree with Keystone Driller Company, successors and assigns that I have granted no license to make, use or sell the said invention, that prior to the execution of this deed my right, title and interest in the said invention had not been encumbered, that I then had good right and title to sell and assign the same and that I have not executed and will not execute any instrument in conflict herewith.

In Witness Whereof, I have hereunto set my hand and affixed my seal this 31st day of Dec. A. D. 1926.

(Seal) Robert Rex Downie.

County of Beaver,
State of Pennsylvania.

On this 31st day of Dec., A. D. 1926 appeared the above-named Robert Rex Downie personally known to me, and known by me to be the one who executed the foregoing instrument, and acknowledged the same to be his free act and deed, before me,

Chas. Theo. Smith,
(Seal) *Notary Public.*

Commission Expires March 13, 1927.

Recorded Transfers of Patents U. S. Patent Office. Jan. 3, 1927. Liber Y128, page 255.

Thomas E. Robertson,
Commissioner of Patents.

ASSIGNMENT.

Liber Y128 Page 256 1525

WHEREAS, I, Robert Rex Downie, a citizen of the United States and a resident of Beaver Falls, in the County of Beaver and State of Pennsylvania, have invented an Improvement in Excavating Scoops and Processes and have executed an application for Letters Patent of the United States of America based thereon this first day of Jany., 1927.

AND WHEREAS, Keystone Driller Company, a corporation of Pennsylvania, is desirous of acquiring the entire right, title and interest in and to the said invention in and throughout the United States of America, its Territories, and all countries foreign thereto, and in and to the said application for Letters Patent, and in and to any and all Letters Patent of the United States of America and countries foreign thereto, which have been or may be granted on said invention or any part thereof;

NOW THEREFORE, for one dollar and other good and valuable consideration, receipt of which is hereby acknowledged, I the said Robert Rex Downie have agreed to and do hereby sell, assign and transfer unto the said Keystone Driller Company, the entire right, title and interest in and throughout the United States of America, its Territories and all countries foreign thereto in and to said invention, said application for Letters Patent, and any and all Letters Patent and extensions thereof, of the United States of America and countries foreign thereto, which have been or may be granted on said invention or any part thereof or on said application or any divisional, continuing, renewal, re-issue or other application based in whole or in part thereon, or based upon said invention;

TO BE HELD AND ENJOYED by the said Keystone Driller Company, its ~~heirs, executors, administrators,~~ successors, and assigns to the full ends of the terms for which said Letters Patent or any of them have been or may be granted, as fully and entirely as the same would have been held and enjoyed by me had no sale and assignment of said interest been made; and I do hereby authorize and request the Commissioner of Patents of the United States of America to issue any and all Letters Patent of the United States of America which may be granted upon the said applications above referred to, or

any of them, or upon said invention or any part thereof, to Keystone Driller Company, aforesaid and I hereby agree for myself and for my heirs, executors and administrators, to execute without further consideration any further lawful documents and any further assurances, and any re-issue, renewal, or other application for Letters Patent that may be deemed necessary by the assignee herein named, fully to secure to the said assignee my interest as aforesaid in and to said invention or any part thereof, and in and to said several Letters Patent or any of them.

And I do hereby covenant for myself and my legal representatives and agree with Keystone Driller Company, its successors and assigns that I have granted no license to make, use or sell the said invention, that prior to the execution of this deed my right, title and interest in the said invention had not been encumbered, that I then had good right and title to sell and assign the same and that I have not executed and will not execute any instrument in conflict herewith.

IN WITNESS WHEREOF, I have hereunto set my hand and affixed my seal this first day of Jan'y A. D. 1927.

(Seal) ROBERT REX DOWNIE.

COUNTY OF BEAVER,
STATE OF PENNSYLVANIA.

On this first day of Jan'y A. D. 1927 appeared the above-named Robert Rex Downie personally known to me, and known by me to be the one who executed the foregoing instrument, and acknowledged the same to be his free act and deed, before me,

CHAS. THEO. SMITH,
Notary Public.

Commission Expires March 13, 1927.

Recorded Transfers of Patents U. S. Patent Office Jan. 3, 1927. Liber Y128 page 256.

THOMAS E. ROBERTSON,
Commissioner of Patents.

DEPARTMENT OF THE INTERIOR,

UNITED STATES PATENT OFFICE.

Received and Recorded on the 27th day of June, 1921 in Liber X113, page 297 of Transfers of Patents.

IN TESTIMONY WHEREOF, I have caused the seal of the Patent Office to be hereunto affixed.

Exd. G. S. THOMAS E. ROBERTSON,
(Seal) *Commissioner of Patents.*

ASSIGNMENT BEFORE PATENT.

WHEREAS, I, Robert Rex Downie, of Beaver Falls, County of Beaver and State of Pennsylvania have invented certain Improvements in Excavating Machines for which I am about to make application for Letters-Patent of the United States.

AND WHEREAS, Keystone Driller Company a corporation of Pennsylvania, located and doing business at Beaver Falls, Penna., is desirous of acquiring an interest therein, and in the Letters-Patent to be obtained therefor:

NOW, THEREFORE, TO ALL WHOM IT MAY CONCERN, BE IT KNOWN That for and in consideration of One Dollar to me in hand paid, the receipt whereof is acknowledged, I have assigned, sold and transferred, and by these presents do hereby assign, sell, and transfer unto the said Keystone Driller Company, all of the right, title, and interest in and to the said invention, as set forth in the specification executed by me, this day preparatory to obtaining Letters-Patent therefor; and I hereby request the Commissioner of Patents to issue the Letters-Patent to the said Keystone Driller Company in accordance with this assignment.

IN TESTIMONY WHEREOF, I hereunto set my hand and affix my seal, this 22nd day of June, 1921.

ROBERT REX DOWNIE. [Seal]

In presence of

CHAS. THEO. SMITH,
JAMES D. BOWSER.

STATE OF PENNSYLVANIA,
COUNTY OF BEAVER, ss.

On this 22nd day of June, 1921, before me, personally appeared the above-named Robert Rex Downie who acknowledged that he executed the foregoing assignment for the uses and purposes therein mentioned.

CHAS. THEO. SMITH,
(Seal) *Notary Public.*

Commission Expires March 9, 1923.

ASSIGNMENT BEFORE PATENT.

WHEREAS, I, Robert Rex Downie, of Beaver Falls, County of Beaver and State of Pennsylvania have invented certain Improvements in Excavating Machines for which I am about to make application for Letters-Patent of the United States.

AND WHEREAS, Keystone Driller Company a corporation of the State of Pennsylvania, doing business at Beaver Falls, Pennsylvania, is desirous of acquiring an interest therein, and in the Letters-Patent to be obtained therefor:

NOW, THEREFORE, TO ALL WHOM IT MAY CONCERN, BE IT KNOWN That for and in consideration of One Dollar to me in hand paid, the receipt whereof is acknowledged, I have assigned, sold and transferred, and by these presents do hereby assign, sell, and transfer unto the said Keystone Driller Company, all of the right, title, and interest in and to the said invention, as set forth in the specification executed by me, this day preparatory to obtaining Letters-Patent therefor; and I hereby request the Commissioner of Patents to issue the Letters-Patent to the said Keystone Driller Company in accordance with this assignment.

IN TESTIMONY WHEREOF, I hereunto set my hand and affix my seal, this 26th day of January, 1925.

ROBERT REX DOWNIE. [Seal]

In presence of

R. F. PATTERSON,
JAMES D. BOWSER.

STATE OF PENNSYLVANIA,
COUNTY OF BEAVER, SS.

On this 26th day of January, 1925, before me, personally appeared the above-named Robert Rex Downie who acknowledged that he executed the foregoing assignment for the uses and purposes therein mentioned.

CHAS. THEO. SMITH,
(Seal) *Notary Public.*

Commission Expires March 13, 1927.

Received and Recorded in U. S. Patent Office Jan. 28, 1925. In Liber J-123, Page 514 of Transfers of Patents.

THOMAS E. ROBERTSON,
Exd. E. H. G. *Commissioner of Patents.*

Liber C129 page 200

To All Whom It May Concern:

WHEREAS, Leroy P. Clutter, formerly of Beaver Falls, Pennsylvania, now of R. D. No. 4 Uniontown, Pennsylvania, did obtain letters patent of the United States for an alleged new and useful improvement in Ditching or Excavating Machines, which letters patent bear date the 30th day of September, 1919, and are numbered one million three hundred and seventeen thousand four hundred and thirty-one (1,317,431), and

WHEREAS, the Keystone Driller Company, a corporation, whose place of business and principal office is located at Beaver Falls, Pennsylvania, is desirous of acquiring said patent,

NOW THIS INDENTURE WITNESSETH, that in consideration of the sum of one dollar in hand paid, the receipt of which is hereby acknowledged, I, the said Leroy P. Clutter, have assigned, sold and set over, and do by these presents assign, sell and set over unto the said Keystone Driller Company all the right, title and interest I have in and to the said letters patent and the invention thereby secured.

The same to be held and enjoyed by the said Keystone Driller Company for its own use and behoof and for the use and behoof of its successors and assigns, to the full end of the term for which said letters were granted, as fully and entirely as the same would have

been held and enjoyed by me had this assignment and sale not been made.

IN TESTIMONY WHEREOF, I have hereunto set my hand and affixed my seal, this 17th day of May, 1921.

LEROY P. CLUTTER. (Seal)

Signed, sealed and delivered in presence of

CHAS. THEO. SMITH.

STATE OF PENNSYLVANIA,
COUNTY OF BEAVER, SS.

On this 17th day of May, 1921, before me personally appeared the above named Leroy P. Clutter, who acknowledged that he executed the foregoing assignment for the uses and purposes therein mentioned.

CHAS. THEO. SMITH,
(Seal) *Notary Public.*

Commission Expires March 9, 1923.

Recorded Transfers of Patents U. S. Patent Office Sep. 23, 1926. Liber C129 page 200.

THOMAS E. ROBERTSON,
Commissioner of Patents.

PLAINTIFF'S EXHIBIT NO. P-22.

Letters of Notice to the Osgood Company.

(Filed May 16, 1931.)

[Cases Nos. 964 and 965]

August 26, 1929.

Edwin P. Corbett, Esq.,
820 Huntington Bank Bldg.,
Columbus, Ohio.

Re: File 2747

Dear Sir:—

I have never heard from you further, following your letter of June 26, 1929, stating that you will let me hear

from you promptly relative to the Osgood Company's infringement of patents 1,709,466 and 1,716,432.

Very truly yours,

PES:B PHILIP E. SIGGERS.

EDWIN P. CORBETT
ATTORNEY AT LAW
820 Huntington Bank Building
Columbus, Ohio

Adams 6041

June 26, 1929.

Messrs. Siggers & Adams,
918 F Street, N. W.,
Washington, D. C

Gentlemen:

Your letter of the 4th inst. charging the Osgood Company with infringement of patent No. 1,709,466 of April 16, 1929 and also charging infringement of the patent to issue on June 11, 1929 has been turned over to me for consideration. I have obtained a copy of patent No. 1,709,466. I have also obtained a copy of patent No. 1,716,432 which seems to be the only one issued on June 11 to your client and which, I assume, is the patent you refer to. The first of these patents has twenty-one claims and the second of these patents has eighteen claims. Possibly you can tell me which claims you consider infringed by the Osgood structure. I imagine it would save me considerable labor and might hasten my reply.

In any event, I shall let you hear from me promptly but I will appreciate it if you can designate the claims.

Very truly yours,

EPC:B E. P. CORBETT.

(Siggers & Adams, June 27, '29, Washington, D. C.)

THE OSGOOD COMPANY
Manufacturers of
EXCAVATING MACHINERY
High Grade Steel Castings
Marion Ohio, U. S. A., June 7, 1929.

Siggers & Adams,
918 F. Street, N. W.,
Washington, D. C.

Gentlemen:—

Acknowledging receipt of yours of June 4th, we have referred this letter to our Attorney for attention.

Yours very truly,

THE OSGOOD COMPANY,
M. C. McNEIL.

MCM:FL

(Siggers & Adams, June 10, '29, Washington, D. C.)

REGISTRY CARD

Post Office Department
Official Business

Penalty for Private Use to Avoid Payment of Postage, $300.

Registered Article
No. 299753
Insured Parcel
No. .....

Postmark of Delivering Office and Date of Delivery

(Marion, Ohio, June 7, 11:30 A. M., 1929)

Return to Siggers & Adams.

(Name of Sender)

Street and Number,
or Post Office Box, 918 F St., N. W.,

Washington, D. C.

RETURN RECEIPT

Received from the Postmaster the Registered or Insured Article, the original number of which appears on the face of this Card.

The Osgood Co.
(Signature or name of addressee.)
C. L. Monson.
(Signature of addressee's agent.)
Date of delivery, ..., 192

RECEIPT FOR REGISTERED ARTICLE NO. 299753

....., 192
(Date.)

15 fee paid. 1 class postage paid.
From Siggers & Adams, 918 F St., N. W.
Addressed to The Osgood Co., Marion Ohio.
Accepting employee will place initials in space below, indicating restricted delivery.
Return receipt fee ✓ Special delivery fee .....

Delivery restricted to addressee { in person ..... / in order .....

152 Postmaster, per Weighton.

(Postmark—Washington, D. C. (G Street Sta.) Registered.)

THE OSGOOD CO.,
Marion, Ohio.
June 4, 1929.
File 1159

Gentlemen:—

Your infringement of patent No. 1,709,466 which issued April 16, 1929, to our client, Keystone Driller Company, has been brought to our attention. You are requested to desist immediately, and to render an accounting. Failing this, we shall bring a supplemental bill of complaint to include the above patent in the pending suit.

Constructive notice of this patent has been given by the patent plates which are attached to all Keystone Driller machines.

There is also a patent on a side rake tooth, to issue June 11, which, in our opinion, will be infringed if you continue your present activities. We shall send you a

separate notice later, unless convinced that you will thereafter respect our client's patents.

Very truly yours,

PES:B

SIGGERS & ADAMS.

THE OSGOOD COMPANY
Manufacturers of
Excavating Machinery

Marion, Ohio, U. S. A.
November 21, 1927.

Siggers & Adams,
National Union Bldg.,
918 F Street, N. W.,
Washington, D. C.

Gentlemen:—

Your letter of November 10th was evidently written without a full understanding of the facts before you.

We are not infringing any patent but are building according to drawings, records and patterns developed long before the Keystone Driller Company even thought of such a piece of apparatus. Accordingly we do not see where we are interested in the subject matter of your letter.

Mr. Sauer did not appear as a representative of this Company but as an entirely disinterested party.

Very truly yours,

THE OSGOOD COMPANY
M. C. MCNEIL, *Treas.*

MCM:FL

(Envelope)

Return After Five Days To
OSGOOD
Marion, Ohio, U. S. A.

(Marion, Ohio. Nov. 21, 1927. 6—P.M.)
(Cancelled United States Postage 2 Cent Stamp)

SIGGERS & ADAMS
National Union Bldg.
918 F. Street N. W.
Washington D. C.

REGISTRY CARD

Post Office Department
Official Business

Registered Article
No. 870649
Insured Parcel
No. .....

Penalty for Private Use
To Avoid Payment of
Postage, $300.

Postmark of Delivering
Office
and Date of Delivery

(Marion, Ohio. Nov. 12, 1927. 6—P.M.)

Return to Sigger-Adams
(Name of Sender)
Street and Number, or Post Office Box, 918 F St. N. W.
Washington, D. C.

Not at 918 F. N. W. 115

RETURN RECEIPT

Received from the Postmaster the Registered or Insured Article, the original number of which appears on the face of this Card.

THE OSGOOD CO.
(Signature or name of addressee.)

CYRIL MONSON
(Signature of addressee's agent.)

Date of delivery, 11/12, 1927

RECEIPT FOR REGISTERED ARTICLE NO. 870649

Registered at the Post Office indicated in Postmark
Fee paid 15 cents Class postage 1
Return Receipt fee 3 Spl. Del'y fee ....
Delivery restricted to addressee:
in person ...., or order ....

Accepting employee will place his initials in space indicating restricted delivery.

Postmaster, per M

(Postmark—Washington, D. C. (.... Street Sta.)
Registered.)

PLAINTIFF'S EXHIBIT NO. P-23.

Letters of Notice to General Excavator Co.

(Filed May 16, 1931.)

[Cases Nos. 964 and 965]

June 10, 1929.

The General Excavator Company,
Marion, Ohio.

Atten: Mr. Edgar Barnhart.

Gentlemen:—

We have your letter of June 7, 1929.

The number of the patent to issue June 11th to the Keystone Driller Company is 1,716,432.

Very truly yours,

SIGGERS & ADAMS.

THE GENERAL EXCAVATOR COMPANY
Marion, Ohio, U. S. A.
GENERAL

June Seventh 1929

Siggers & Adams,
National Union Bldg.,
918 F. Street, N. W.,
Washington, D. C.

Gentlemen:—

This will acknowledge your letter of June 4th, File Reference 1159, on the subject of patent No. 1,709,466 issued April 16, 1929 to the Keystone Driller Company.

The matter has been referred to our attorney, Mr. Edward L. Reed, 1165 Reibold Building, Dayton, Ohio and will have his careful consideration.

Will you please advise us at your early convenience the number of the patent which you say is to issue June 11th.

Yours very truly,

THE GENERAL EXCAVATOR COMPANY,
EDGAR BARNHART,
Plant Manager.

EWB:RA

(Siggers & Adams, June 10, 1929, Washington, D. C.)

REGISTRY CARD

Post Office Department
Official Business

Penalty for Private Use to Avoid Payment of Postage, $300.

Registered Article No. 299754
Insured Parcel No. .....

Postmark of Delivering Office and Date of Delivery

(Marion, Ohio. Jun. 7, 1929. 4:30 P.M.)

Return to Siggers & Adams
(Name of Sender)
Street and Number, or Post Office Box, 918 F St. N. W.
Washington, D. C.

RETURN RECEIPT

Received from the Postmaster the Registered or Insured Article, the original number of which appears on the face of this Card.

GENERAL EXCAVATOR.
(Signature or name of addressee.)

J. P. BAKER.
(Signature of addressee's agent.)

Date of Delivery, 6/7, 1929.

RECEIPT FOR REGISTERED ARTICLE NO. 229754

15 fee paid. 1 class postage paid. ....., 192
(Date)

From Same
Addressed to The General Excavator, Marion, Ohio.

Accepting employee will place initials in space below, indicating restricted delivery.

Return receipt fee ✓ Special Delivery fee .....
Delivery restricted to addressee { in person ..... or order .....

Postmaster, per WEIGHTON.

(Washington, D. C. (..... Street Sta.) Registered Jun. 5, 1929)

June 4, 1929

The General Excavator Co.,
Marion,
Ohio.

Re: File 1159

Gentlemen:—

Your infringement of patent No. 1,709,466 which issued April 16, 1929 to our client, Keystone Driller Company, has been brought to our attention. You are requested to desist immediately, and to render an accounting. Failing this, we shall bring a supplemental bill of complaint to include the above patent in the pending suit.

Constructive notice of this patent has been given by the patent plates which are attached to all Keystone Driller machines.

There is also a patent on a side rake tooth, to issue June 11, which, in our opinion, will be infringed if you continue your present activities. We shall send you a separate notice later, unless convinced that you will thereafter respect our client's patents.

Very truly yours,

PES:B

SIGGERS & ADAMS.

(Copy)

January 31, 1929.

General Excavator Company,
Marion, Ohio.

Gentlemen:

This will follow the letter of January 24, 1929 written to you by Siggers & Adams from Washington, D. C., and is written in connection with that letter and also the letter of Philip E. Siggers of April 11, 1928 to you. This letter is, as those letters were, written at the direction of the Keystone Driller Company and is for the purpose of advising you that you are infringing the following patents owned by the Keystone Driller Company:

Clutter No. 1,317,431
Downie No. 1,511,114
Downie No. 1,543,250

and further to advise you that we will shortly file a Bill of Complaint against you asking for preliminary injunction, enjoining you from infringing the above named patents which, as Siggers & Adams wrote you, have been

sustained by His Honor Judge Jones in the United States District Court for the Northern District of Ohio, unless in the meantime you agree to discontinue your infringement and make suitable settlement for past infringement.

Very truly yours,

#:K (Signed) F. O. Richey.

January 24, 1929

The General Excavator Co.,
Marion,
Ohio.

Re: File 1159

Gentlemen:—

We are writing merely to inform you of the decision of the District Court of the United States for the Northern District of Ohio, Eastern Division, at Cleveland, upholding the validity of the following claims of patents owned by the Keystone Driller Company:

Claim 4 of Clutter patent	1,317,431
Claims 6 and 7 of Wagner et al	1,476,121
Claims 1-14 incl. of Downie	1,511,114
Claims 1-10 incl. of Downie	1,543,250

All of these claims were held to be infringed by Byers Machine Company. None of the claims sued on was held invalid.

A copy of the court's decision may be obtained from the clerk of the court at Cleveland, from this office or from the Keystone Driller Company, Beaver Falls, Pa.

Very truly yours,

PES:B Siggers & Adams.

October 3, 1928

Edwin P. Corbett, Esq.,
820 Huntington Bank Bldg.,
Columbus,
Ohio.

Re: File 1159 General

Dear Sir:—

We have your letter of October 1 stating that you have taken up the matter of infringement, and also requesting information about the allowed claims in pending applications owned by the Keystone Driller Company.

We shall be glad to give you a copy of these allowed claims, as soon as we have been furnished with a blueprint or photograph showing clearly your present construction of scoop. Naturally we are in doubt about infringement of some of the claims which we have in mind, although we are certain that infringement exists; and we cannot give you a complete list of all claims infringed, without having exact information about what your client is manufacturing. The photographs now in our possession are from one of the General Excavator Company's catalogs and do not show certain details of construction which we should know about.

Very truly yours,

PES:B SIGGERS & ADAMS.

EDWIN P. CORBETT
Attorney at Law
820 Huntington Bank Building
Columbus, Ohio
Adams 6041

October 1, 1928.

Messrs. Siggers & Adams,
National Union Building,
918 F Street, N. W.,
Washington, D. C.

Gentlemen:

Your letter of the 19th instant and your previous letters to the General Exeavator Company of Marion, Ohio, have been turned over to me for consideration. I shall take up the question of your charge of infringement of the two patents named in your letter of April 11, 1928, and shall let you hear from me in the course of a couple of weeks.

Regarding the matter of the alleged infringement by my clients of "numerous allowed claims in pending applications owned by the Keystone Driller Company," I would suggest that you let me know what these allowed claims are so that I may advise my clients intelligently about this phase of the situation.

Very truly yours,

EPC:L E. P. CORBETT.

(Siggers & Adams. Oct. 3, '28. Washington, D. C.)

THE GENERAL EXCAVATOR COMPANY
Marion, Ohio, U. S. A.
GENERAL

October First 1928

Siggers & Adams,
National Union Building,
918 F Street, N.W.,
Washington, D. C.

Attention: Mr. Philip E. Siggers

Subject: Your letter September 19th, 1928,
your file 1159—GENERAL

Gentlemen:—

This is to acknowledge your letter of September 19th, 1928, relative to alleged infringement of Keystone Driller Company's patent.

We have retained Mr. Edwin T. Corbett, 17 South High Street, Columbus, Ohio, as our attorney, and he will write you further on this subject within the next week or so.

Yours very truly,

THE GENERAL EXCAVATOR COMPANY,
EDGAR W. BARNHART,
Plant Manager.

EWB:NL
No. 3

(Siggers & Adams. Oct. 3, '28. Washington, D. C.)

RECEIPT FOR REGISTERED ARTICLE NO. 877828

Registered at the Post Office indicated in Postmark
Fee paid 15 cents Class postage 1
Return Receipt fee 3 Spl. Del'y fee ....
Delivery restricted to addressee:
in person ...., or order ....

Accepting employee will place his initials in space indicating restricted delivery.
Postmaster, per W

(Washington, (F Street Sta.) D. C. Registered.
Sep. 19, 1928.)

REGISTRY CARD

Post Office Department
Official Business

Registered Article
No. 877828
Insured Parcel
No. .....

Penalty for Private Use
To Avoid Payment of
Postage, $300.
Postmark of Delivering
Office
And Date of Delivery

(Marion, Ohio, Sep. 21, 1928. 4:30 P. M.)

Return to Siggers & Adams,
(Name of Sender)
Street and Number, or Post Office Box, 918 F
Washington, D. C.

RETURN RECEIPT

Received from the Postmaster the Registered or Insured Article, the original number of which appears on the face of this Card.

GENERAL EXCAVATOR CO.
(Signature or name of addressee.)
J. B. BAKER
(Signature of addressee's agent.)

Date of delivery, 9/21, 1928.

September 19, 1928

General Excavator Company,
Marion,
Ohio.

Re: File 1159—General

Gentlemen:—

We have had no word from you since April 17 about the infringement of the Keystone Driller Company's patents. Within the past few days, our attention has been called to the fact that you infringe not only the two patents named in our letter of April 11, 1928 but also numerous allowed claims in pending applications owned by the Keystone Driller Company, and covering the manner of connecting the ditcher stick to the scoop, the improved side rake teeth and the manner of connecting them to the scoop, and various other features originated by the Keystone Driller Company. Because of your refusal to respect our client's rights, the situation has become in-

tolerable. You may rely upon us to take aggressive steps if your infringement persists.

Very truly yours,

PES:B PHILIP E. SIGGERS.

THE GENERAL EXCAVATOR COMPANY
Marion, Ohio, U. S. A.
GENERAL

April Seventeenth 1928

Siggers & Adams,
918 F Street, N. W.,
Washington, D. C.

Gentlemen:—

Your letter of April 11th. We went over your patents very carefully prior to the time we started building machines and were advised that they did not infringe. However, I am again taking the matter up with our patent attorney that he make a search and upon receipt of advice from him we will confer with you further.

Yours truly,

THE GENERAL EXCAVATOR COMPANY,
C. A. OWENS.

(Siggers & Adams. Apr. 19, '28. Washington, D. C.)

RECEIPT FOR REGISTERED ARTICLE NO. 875254

Registered at the Post Office indicated in Postmark
Fee paid 15 cents Class postage 1
Return Receipt fee 3 Spl. Del'y fee ....
Delivery restricted to addressee:
in person ...., or order ....

Accepting employee will place his initials in space indicating restricted delivery.
Postmaster, per M.

(Washington, (F Street Sta.) D. C. Registered.
Apr. 11, 1928.)

REGISTRY CARD

Post Office Department
Official Business

Penalty for Private Use
To Avoid Payment of
Postage, $300.

Registered Article
No. 875254
Insured Parcel
No. .....

Postmark of Delivering
Office
And Date of Delivery

(Marion, Ohio. April 12, 1928. 3:30 P.M.)

Return to Siggers-Adams
(Name of Sender)

Street and number, or Post Office Box, 918 F St. N. W.
Washington, D. C.

(Siggers & Adams. Apr. 13, '28. Washington, D. C.)

RETURN RECEIPT

Received from the Postmaster the Registered or Insured Article, the original number of which appears on the face of this Card.

GENERAL Ex. Co.
(Signature or name of addressee.)

D. F. FOREMAN
(Signature of addressee's agent.)

Date of delivery, 4/12, 1928.

April 11, 1928

The General Excavator Company,
Marion,
Ohio.

Re: File 1159—General Excavator

Gentlemen:—

This is to notify you formally of your infringement of the following patents owned by the Keystone Driller Company:

1,317,431,	Clutter,	September 30, 1919
1,511,114,	Downie,	October 7, 1924

For sometime the Keystone Driller Company has notified the public of its rights under the above patents

by attaching to each of its machines metal plates bearing the dates (and recently the numbers also) of said patents, as well as of other patents owned by it. As a member of the public, you have thus received constructive notice of the rights of the Keystone Driller Company arising from the issue of the above identified patents. Furthermore, Keystone Driller machines bearing patent notices have been exhibited at the Chicago road shows for a number of years past.

As you have been informed, the Keystone Driller Company is now prosecuting a suit for infringement of the above-named patents against the Byers Machine Company in the United States District Court in Cleveland. It has also filed suits against the Bay City Dredge Works in the District Court in Bay City. Unless you are prepared to make an accounting for past infringement, or unless you enter into some amicable agreement with the Keystone Driller Company, a suit for infringement may be brought against you to recover profits or damages and to obtain injunctive relief.

A written response to this letter is requested.

Very truly yours,

PES:B PHILIP E. SIGGERS.

964.965
Plaintiff's Exhibit
No. P38

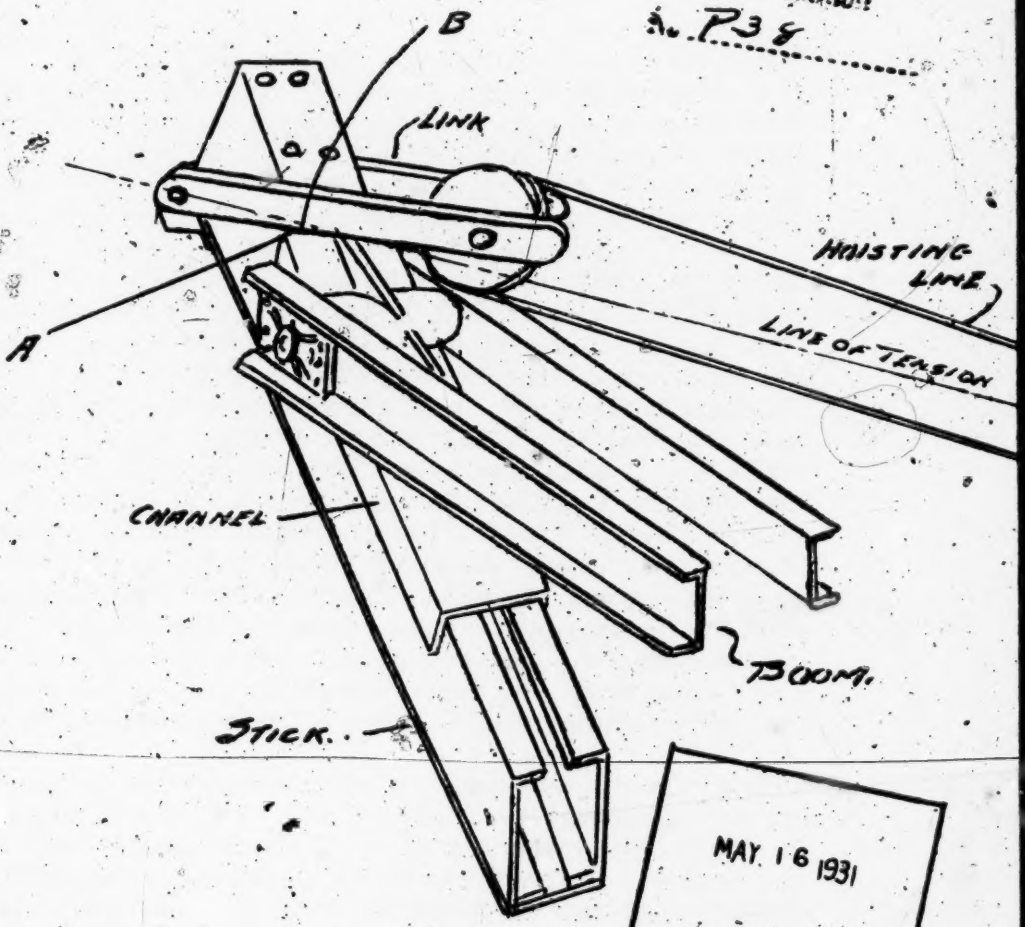

MAY 16 1931

OSGOOD IN CONNECTION WITH
2ND DOWNIE PATENT.

PLAINTIFF'S EXHIBIT NO. P-45.

Letter, April 12, 1929, Keystone Driller Co. to G. E. Wagner.

(Filed May 16, 1931.)

[Cases Nos. 964 and 965]

April 12, 1920.

Mr. G. E. Wagner,
870 Bloomfield Avenue, Akron, Ohio.

Dear Sir:

With respect to your proposition that we offer and give you something of value to conceal or suppress any report of any evidence which you claim to exist with respect to our ditching machine patent litigation, we advise you that we will neither offer nor give you anything, nor be a party to your proposition to suppress or conceal any evidence in this or any other law suit.

We understand you refer to the reports of the alleged evidence of the use of a ditcher at Joplin, Missouri, and will say that we have been all over this matter and are advised and convinced such reports are immaterial to any issue in the case. We knew of these reports before the suit against the Byers Company was started. The whole matter was submitted to our attorneys before this suit was started and has since been submitted to other attorneys, and all have advised us that the alleged evidence, if the most exaggerated reports thereof were true, is immaterial to any issue in the case. We were so advised before the suit was started and have since been advised to the same effect. We have no objections to your disclosing what you know about this matter to the Byers Company or its attorneys, or to anyone else.

As you know Burn Clutter some time ago approached us and we refused him for the same reasons as we are giving to you. Nor will we be any party to your proposition to induce Burn Clutter to conceal or suppress any knowledge he may have or thinks he may have regarding this matter.

We have written B. C. Clutter similarly to the above but since we do not know his street address we enclose letter for him herewith. Will you please fill in the address and mail it or else deliver same to him.

Yours truly,

KEYSTONE DRILLER COMPANY,
J. VALE DOWNIE,
President.

JVD.FB

PLAINTIFF'S EXHIBIT NO. P-46.

Letter, April 12, 1929, Keystone Driller Co. to B. C. Clutter.

(Filed May 16, 1931.)

[Cases Nos. 964 and 965]

April 12, 1929.

Mr. B. C. Clutter,
Akron, Ohio.

Dear Sir:

With respect to your proposition that we offer and give you something of value to conceal or suppress any report of any evidence which you claim to exist with respect to our ditching machine patent litigation, we advise you that we will neither offer nor give you anything, nor be a party to your proposition to suppress or conceal any evidence in this or any other law suit.

We understand you refer to the reports of the alleged evidence of the use of a ditcher at Joplin, Missouri, and will say that we have been all over this matter and are advised and convinced such reports are immaterial to any issue in the case. We knew of these reports before the suit against the Byers Company was started. The whole matter was submitted to our attorneys before this suit was started and has since been submitted to other attorneys, and all have advised us that the alleged evidence, if the most exaggerated reports thereof were true, is immaterial to any issue in the case. We were so advised before the suit was started and have since been advised to the same effect. We have no objections to your disclosing what you know about this matter to the Byers Company or its attorneys or to anyone else.

As you know Burn Clutter some time ago approached us and we refused him for the same reasons as we are giving to you. Nor will we be any party to your proposition to induce Burn Clutter to conceal or suppress any knowledge he may have or thinks he may have regarding this matter.

Yours truly,

KEYSTONE DRILLER COMPANY,
J. VALE DOWNIE,
President.

JVD.FB

PLAINTIFF'S EXHIBIT NO. P-73.

Affidavit of Herbert Wallower, date May 8, 1925.

(Filed May 16, 1931.)

[Cases Nos. 964 and 965]

Date May 8, 1925.

TO WHOM IT MAY CONCERN:—

I, Herbert Wallower, now residing in Baxter Springs, Kansas, was the active superintendent of the Orange Contracting Company of Joplin, Missouri, which firm did the basement excavating for the Joplin Supply Company building on Third Street, Joplin, Missouri. The job was done in the winter of 1919-1920.

We used a Keystone excavator for digging and loading the spoil. We first used a skimmer scoop, but were compelled to change to the ditcher in order to get sufficient elevation and reach to bring the spoil from the bottom of the hole yet without running the conveyances down onto the floor of the excavation. In using the then standard Keystone Ditcher we encountered difficulty in discharging the sticky material from the scoop.

It occurred to me that the dumping of material would be facilitated by use of a scoop with a pivoted bottom, and that such scoop could be attached to the lower end of the stick. Accordingly, under the supervision of B. R. Clutter, and after securing from the Keystone Driller Co. a print of the body plate of the Keystone skimmer scoop we had two scoops made for use in the manner described above.

The two scoops were built concurrently, and the principal reason for building two instead of one for trial was that we desired to have one scoop as a substitute for the job immediately before us, as a fall-back in case of breakage. Also, as contributing to the decision to make two scoops instead of one there was the fact that we owned two Keystone machines and therefore expected to have use for two scoops in case the idea should prove satisfactory; and the expected saving in trouble and expense due to making the scoops at the same time appeared to more than offset the risk of finding the design impracticable.

Both of these scoops were installed on the machines at the Joplin Supply Co. excavation. They were operated on this job by B. R. Clutter for about six weeks. Both scoops were tried on trench work for about six weeks.

The falling bottom was found to be of advantage in discharging sticky clay but not of sufficient advantage to warrant our continuing the use of the scoops in view of the care and repairing required for operation. The latch mechanism was never reduced to a positively-acting and properly protected form.

In March or April 1920 use as ditchers was abandoned and both scoops were converted into skimmers; and at that time as many of the regular Keystone ditcher attachment parts as were undamaged by the experimentation were returned to the Keystone Driller Company for credit.

Signed H. H. WALLOWER.

Affidavit:—Sworn to and subscribed before me this 8th day of May, 1925.

F. E. ELLISON,
Notary Public.

(Seal)

My commission expires Sept. 13, 1928.

From the desk of
F. B. Ransom

F. E. ELLISON,
Quapaw, Okla.

DEFENDANT'S EXHIBIT NO. 7.

Letter from Oliver Brothers, New York, Oct. 31, 1914, to the Mahoney Railroad Ditching Machine Co., Vincennes, Indiana.

(Filed May 16, 1931.)

[Cases Nos. 964 and 965].

OLIVER BROTHERS PURCHASING COMPANY,
71-73 Murray Street,
New York,

Oct. 31st, 1914.
A. C.

Mahoney Railroad Ditching Machinery Co.,
Vincends, Ind.

Gentlemen:

We have an inquiry for a thousand or more Ditching Machines and if you are in a position to furnish such Machines, would suggest that you send us illustrations or catalogue together with prices of same.

In quoting, please state cash discount and make your price delivered at ship's side, New York.

We believe it would be necessary to have a rugged type of Machine, one that would do heavy work in different kinds of earth, and as we judge these machines would be used for digging Trenches for the Armies in Europe, we would want a Machine which would dig a ditch or trench and throw the earth up on one side which could of course be used as earth works.

It would be necessary to have Machines which could be pulled along by a tractor or engine. The parties desiring these Machines already have the engines and would merely require the machines to make the ditch or trench.

You can understand that it would be necessary to make your quotation as clear as possible and also as brief as possible so as to avoid unnecessary complications.

In quoting state how many Machines you could furnish per week, how soon you could make the first shipment, weight of Machines, whether necessary to have an expert to put them together or not, what provision would be necessary for repair parts. In fact, cover the situation as clearly and briefly as possible so that the placing

of orders will not be held up on account of any technical points to be settled.

Yours very truly,

OLIVER BROTHERS PURCHASING CO.
MD ALBERT CATTERALL.

P. S. If you are not in a position to furnish Machines indicated above, possibly you will favor us by suggesting the right people to address.

DEFENDANT'S EXHIBIT NO. 8.

Answer of Mahoney Railroad Ditching Machine Co. to letter from Oliver Brothers, dated Oct. 31, 1914.

(Filed May 16, 1931.)

[Cases Nos. 964 and 965]

November 1,

Oliver Brothers Purchasing Company,
71-73 Murray Street,
New York City.

Gentlemen:

With reference to your valued inquiry of October 31st, and to our reply to same of even date in which we give you all the particulars of the Mahoney Ditching Machine, we beg to advise you that the prices contained therein carry a commission of ten percent. (10%) for your goodselves.

We expect to have one of these machines in operation in the vicinity of New York within the next month, so that you will be able to call and inspect same and see the work which this outfit is capable of performing. This fact we believe should be of valuable assistance to you in securing an order, since there will be absolutely no ques-

tion as to the machine's being able to do the work intended.

Regarding the question of shipment, in case of an order for a considerable number being placed at one time, we beg to advise you that we have arranged with one of the largest manufacturers in the country to produce these machines for us, and we would therefore have their guarantee behind ours to cover our promise of shipment.

The photograph attached to our proposition shows one of these machines operating under conditions similar to those which you specify. You can therefore, assure your clients in England that they would be buying a machine which has been tried out and which is proving satisfactory in every respect.

Thanking you for the inquiry, and wishing you success in securing the order, we remain,

Very truly yours,

THE MAHONEY RAILROAD DITCHING MACHINE CO.

CAB/M

DEFENDANT'S EXHIBIT NO. 17.

Receipt for hospital expenses of L. Barekman, dated July 24, 1913, at Vincennes, Indiana, signed J. P. Ramsey.

(Filed May 16, 1931.)

[Cases Nos. 964 and 965]

Vincennes, Ind. July 24, 1913.

Received from Mr. Presnell, for L. Barekman one hundred and forty dollars for Hospital. 20—Dr. Held & Benham 20 Dr. Ramy 100—.

$140.00 J. P. RAMSEY.

DEFENDANT'S EXHIBIT NO. 24

U. S. Patent No. 1,317,431, Sept. 30, 1919, to Leroy P. Clutter, for Ditching or Excavating Machine.

(Filed May 16, 1931)

[Cases Nos. 964 and 965]

PRINTER'S NOTE:

This patent having been reproduced hereinbefore as Plaintiff's Exhibit No. P-1, the same is omitted at this point to avoid duplication. (See Page 91 of Exhibits, Vol. III.)

DEFENDANT'S EXHIBIT NO. 27.

Original letter on Keystone Driller Company's stationery, dated Feb. 20, 1926, addressed to B. R. Clutter, Lakewood, N. J., and signed Rex Downie.

(Filed May 16, 1931.)

[Cases Nos. 964 and 965]

KEYSTONE DRILLER COMPANY

Beaver Falls, Pennsylvania

February 20, 1926.

Mr. B. R. Clutter,
Lakewood, New Jersey.

Dear Burn:—

I still want to know whether you used any side rake teeth fastened to the side walls of the scoop in your drop bottom experiments at Joplin in the early part of 1920. Now do not let your difficulty in corresponding amicably with Mr. Smith interfere with your correspondence with me on this subject. I would like very much to have this information within the next three or four days.

Surely the above question is plain: all I want now is the mere question of fact as to whether *any* side rake teeth were used, bolted or riveted to the sides or body of the scoop. I of course do not refer to side teeth attached to the bottom. Now just take the time to sit down and write me about this or I will not smoke any of your "Luckies" the next time I am in New Jersey.

Yours truly,

RRD.FB — REX DOWNIE.

Now doggone it Burn come across.

DEFENDANT'S EXHIBIT NO. 28.

Financial Statement between Wallower Brothers and C. A. Dieter, dated March 18, 1920, for excavation work on Joplin Supply Co. Bldg., Joplin, Missouri.

(Filed May 16, 1931.)

[Cases Nos. 964 and 965]

March 18th, 1920.

WALLOWER BROS.
Financial Statement of Account
with
Mr. C. A. Dieter.

	Amt. our Pay roll	Work by C. A. Dieter for W. Bros.	Work by W. Bros. for C.A.D.	Over Paid
Dec. 19th, 1919	$395.61			
Dec. 24th, 1919	453.75			
Jan. 2nd, 1920	509.00			
Jan. 9th,	409.50			
Jan. 16th,	497.75			
Jan. 23rd,	557.00			
Jan. 30th,	664.35			
Feb. 6th,	737.25			
Feb. 13th,	760.50			
Feb. 20th,	564.75	604.75	40.00	
Feb. 27th,	636.50	638.00	15.00	27.00 13.50
Mar. 6th,	519.50	545.00	12.00	Deducted
Mar. 13th,	489.99	470.99	8.00	27.00
	$7,295.45			

Original contract,	5,636 yds @	$1.50	$8,454.00
Deductions for Cols.	84.22 "	1.50	126.33
			$8,327.67
Additional yardage	575.98 "	2.00	1,151.96
			$9,479.63

Labor:—March 17th, '19

Work for C. A. Dieter	$25.20	
Work for W. Bros. by C. A. Dieter.	20.00	$5.20

Supplies:		
Lanterns	6.00	11.20
		$9,490.83
Cash received from C. A. Dieter		7,295.45
~~Balance Due~~		$2,195.38
Coal purchased from C. A. Dieter		
4200# @ 5.50 per ton		11.55
Balance due		$2,183.83
Deduction for error in charging labor		15.80
		$2,168.03

Received payment in full as per above statement.

WALLOWER BROS.

H. H. WALLOWER.

DEFENDANT'S EXHIBIT NO. 32.

Fairbanks Steam Shovel Company's Shop Order No. 185, dated January 27, 1910.

(Filed May 16, 1931.)

[Cases Nos. 964 and 965]

SPECIAL PRODUCTION.

THE FAIRBANKS STEAM SHOVEL COMPANY.

Machine No. 185. Order No. 185.
Size of machine 1.½ Yd. Dry Land. Date Jan. 27, 1910.
To be shipped to
Rio Grande Construction Co., Station San Benito,
County ..... State of Texas. On or before May 1, 1910.
Machine must be in operation .....190..

Please make the following:

One special 1.½ yard dryland excavator. Oil engine power 50 H.P. single cylinder type. Boom 40-ft.

Machinery to be mounted on endless webb tracks and self-propelling.

Oil engine electric plant, F. M. & Co., type, with generator, field rheostat, voltmeter, 6 large and 12 small lamps.

Wrenches, oil cans and tools necessary in operation of machine.

To be erected, tested and ready to ship.
Received in factory 1-27-10
Work completed

J. G. FAIRBANKS,
General Manager.

DEFENDANT'S EXHIBIT NO. 33.

Fairbanks Steam Shovel Company's Shop Order No. 188, March 9, 1910, for Back Action Shovel Shipped to George A. Castle, Polk County, Minnesota.

(Filed May 16, 1931.)

[Cases Nos. 964 and 965]

SPECIAL PRODUCTION.

THE FAIRBANKS STEAM SHOVEL COMPANY.

Machine No. 188. Order No. 188.
Size of machine 1 yard Date March 9, 1910.
To be shipped to Geo. A. Castle, Station Melvin, County Polk, State of Minnesota, on or before May 5, 1910.

Machine must be in operation May 15, 1910.

Please make the following:

One dry land machine with one yard dipper. 35-ft boom.

Single cylinder (Fairbanks, Morse), gasoline engine of ample power.

Gasoline storage tank, 200 gallon capacity.

Electric light plant for 25 lights.

To be constructed so that it will travel ahead of the ditch and excavate toward itself. And to move forward under its own power and travel on endless web track.

To be erected, tested and ready to ship May 5, 1910,
Received in factory
Work completed

J. G. FAIRBANKS,
General Manager.

Mac

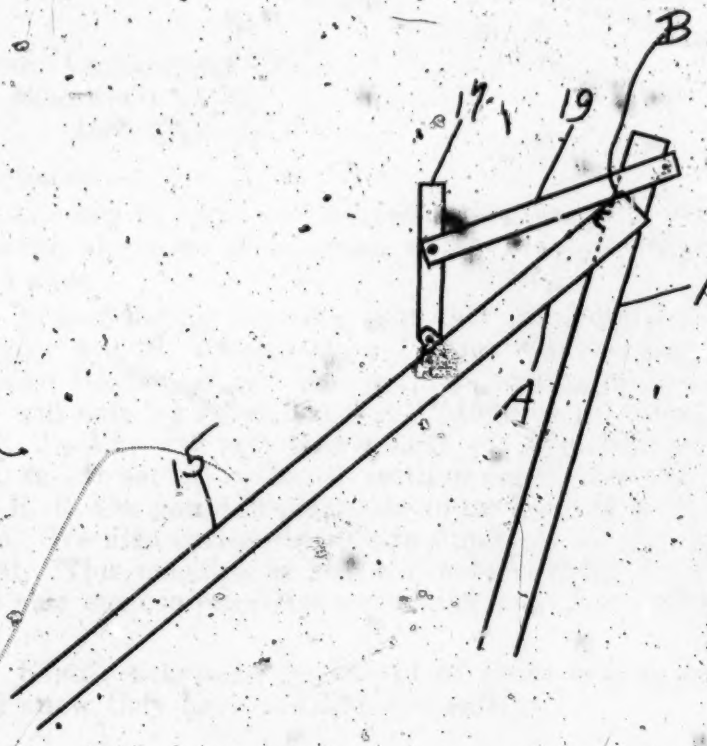

964-965
34

MAY 16 1931

Twice Size
Taken from Clutter Patent 1,317,431 - Sept. 30-1919

002
238

Twice Size

Taken from Clutter Patent 3,174,431 - Sept 30-1965

DEFENDANT'S EXHIBIT NO. 37.

(Sheet 1)

Letter, March 16, 1925, Keystone Driller Co. to Clutter Contracting Co., enclosing Bill of Lading and Invoice.

(Filed May 16, 1931.)

[Cases Nos. 964 and 965]

KEYSTONE DRILLER COMPANY
170 Broadway
New York

March 16, 1925.

Clutter Contracting Co.,
Edgewood Court,
Lakewood, N. J.

Gentlemen:—

We beg to hand you herewith the following papers showing shipment of machine which you ordered some days ago:

Bill of lading showing that this shipment left our factory 3/9/25, consigned to Clutter Contracting Co., Lanoko Harbor, N. J. The outfit is coming forward as you will note on Penn. Car No. 925186, routed Penna. C. of N. J. You will note that a 36 ft. car was ordered and a 40 ft. car set in, so that in settling for the freight with the R. R. Co. you will please do so on basis of 36 ft. car rate. We also enclose invoice in duplicate as per agreement. This machine as you will note is Shop No. 4918. We also enclose envelope containing keys for switch on engine.

Kindly acknowledge receipt of these papers so we will know they have reached you safely.

Yours very truly,

KEYSTONE DRILLER COMPANY,
R. J. BOLE.

B/S
encls.

DEFENDANT'S EXHIBIT NO. 37.

(Sheet 2)

Invoice for Excavator from Keystone Driller Co. to Clutter Contracting Co., dated March 9, 1925.

(Filed May 16, 1931.)

[Cases Nos. 964 and 965]

Our responsibility ceases upon delivery of goods to R. R. or Express Co., and claims for loss or damage in transit must be made on such carrying company. Tools or Machinery proving defective will be replaced, but claims for labor or damages will not be allowed. Claims must be made on receipt of goods. To secure replacement of defective goods they must be returned to us, all charges prepaid.

KEYSTONE DRILLER COMPANY

Beaver Falls, Pa., March 9, 1925.

Sold to Clutter Contracting Co.,
Our Order No. SS-1792
Branch Office No. ..... Lakewood,
Your Order Contract N. J.
Terms: Time

Shipped R.P.R. Co. N. J. to Lanoko Harbor, N. J.

Qty.	Description	
1	Model 4'25 Front Crawler Mounting Gasoline Driven Keystone Traction Excavator	$6825.00
1	5/8 yd. 6-roll Skimmer Scoop	300.00
1	3/4 yd. Dipper Scoop, only	250.00
1	36" Drop Bottom Ditcher Scoop and set of Attachments	315.00
1	1/2 yd. Clamshell with set Attachments	550.00
		$8240.00

Shop No. 4918.
P. R. R. Car 925186

DEFENDANT'S EXHIBIT NO. 37 - SHEET 3

Uniform Domestic Straight Bill of Lading adopted by Carriers in Official, Southern and Western Classification

THIS MEMORANDUM is an acknowledgment that a Bill of Lading has been issued and is ... RECEIVED, subject to the classifications and tariffs in effect on the date of the receipt by the carrier of the property ...

From KEYSTONE DRILLER COMPA

At BEAVER FALLS, PA. 3-9-25 192 Shipper's No.

Penna. Company Agent's No.

(Mail or street address of Consignee only)

Consigned to Clutter Contracting Company

Destination Lanoko Harbor State of N.J. Co

Route Penna.-C of N J

Car Initial Penn

(Delivering Carrier) Cap. 100000

No. Packages	DESCRIPTION OF ARTICLES, SPECIAL MARKS, AND EXCEPTIONS	*WEIGHT (Subject to Correction)	Class or Rate
1	Model 4-25 Keystone Traction Trench		
	Excavator Gas Crawler		
4	Pieces Cutter Bands		
1	Bundle Canopy Rods		
1	Bundle Curtain Poles		
2	Boxes Fittings & Curtains	28700#	
1	Boom & Pin	1470#	
1	6 Roll Skimmer Scoop	1555#	
	36' car ordered 40' car set in		
	Dunnage 472#		

3

31725

353

*If the shipment moves between two ports by a carrier by water, the law requires that the bill of lading shall state whether it is "carrier's or ... NOTE.—Where the rate is dependent on value, shippers are required to state specifically in writing the agreed or declared value of the property. The agreed or declared value of the property is hereby specifically stated by the shipper to be not exceeding ... per

KEYSTONE DRILLER COMPANY, *Shipper*, Per ... Agent

Permanent post-office address of shipper, BEAVER FALLS, PA., U. S. A.

DEFENDANT'S EXHIBIT NO. 38.

Keystone Driller Co. Letter to Mr. Burn Clutter, dated November 23, 1928.

(Filed May 16, 1931.)

[Cases Nos. 964 and 965]

KEYSTONE DRILLER COMPANY
Beaver Falls, Pennsylvania

November 23, 1928.

Mr. Burn Clutter,
17 Edgewood Court,
Lakewood, N. J.

Dear Burn:

We have your letter of November 15th and are glad to see that you are still able to argue fluently. Writer has referred to our letter of February 16th with which we enclosed check for $476.00 and by the receipt of which you indicated your satisfaction with the amount of $952.00 as the contingent cash credit substituted for the original machine credit,—which in turn went astray because of our having to take the machine back.

Now the other half of the contingent cash credit was not to become payable until and unless our case should be satisfactorily decided by the end of 1928. No decision has been made as yet. The case drags for various reasons.

If your parts account had been in good shape writer would have no difficulty in securing general approval of these cash remittances, but the fact is the accounting department is being held out of a substantial parts bill which amounts to more than the contingent credit which you still have and which will become due in case the case is settled in accordance with our original deal by the end of 1928.

This leaves the writer nothing to do except point out that you owe us more than we would owe you even if the case were settled,—and that the case is not in fact settled. Hence we cannot say that we feel that there is anything due you under these circumstances.

Writer is sorry that we cannot do any better, but feels that we have no reason to actually exceed the spirit of the deal as made. (Instead we will sell you another machine some day, or Mr. Elmire and I will come down and bum another shore dinner the next time we are in Jersey, and we will stick Elmire for the smokes.)

Yours truly,

KEYSTONE DRILLER COMPANY,
REX DOWNIE.

RRD:FB

DEFENDANT'S EXHIBIT NO. 39.

Keystone Driller Co. letter to Mr. Burn R. Clutter, dated December 4, 1928.

(Filed May 16, 1931.)

[Cases Nos. 964 and 965]

KEYSTONE DRILLER COMPANY
Beaver Falls, Pennsylvania

December 4, 1928.

Mr. Burn R. Clutter,
17 Edgewood Court,
Lakewood, N. J.

Dear Burn:

We have your remonstrance of November 28th and of course have read same carefully.

In trying to find out how or why we could have gotten so far apart in our ideas, after we thought the matter was so carefully arranged to avoid misunderstandings, etc. writer has carefully gone back over the correspondence and memorandum of agreement, and we think we have the explanation of the misunderstanding.

Here is a verbatim copy of Paragraph 4 of the agreement.

"It is agreed that the payment of one-fourth of the price of the machine and equipment named in second paragraph shall be suspended only until two years from date hereof, in anticipation of the possible occurrence of one of the contingencies named in the third paragraph, and that if at that time none of the contingencies named shall have occurred then the third paragraph hereof shall definitely lapse and the suspended one-fourth part of the price shall at once become due and payable in money."

We never thought that this paragraph could be misunderstood as meaning anything else than that the second quarter of the price of the machine could be held up by you for two years from the date of the deal on the chance that one of the three contingencies named in the third paragraph might occur and that if, by the end of two years not one of the above contingencies had occurred, then that second quarter of the price of the machine should be paid by you in money forthwith. We used the plain language "then the third paragraph hereof shall definitely lapse"; this cannot mean anything except that we would not wait any longer for the favorable settlement of the suit,—which was to be the reason for our issuing you the second quarter of credit.

Now possibly you read this fourth paragraph (after having forgotten our verbal explanation and repetition of it) as meaning that *we* should pay *you* a quarter part of the price of the machine in money, but the third paragraph, it seems to us, is very clear on the point that the Company was only to hold the offer open for two years, —"subject to the time limit contained in fourth paragraph hereof"—

Then of course we extended the time within which the contingencies might occur with effect until the end of 1928,—this by our letter of February 16th, 1928; but in the offer to so extend the time we also required substitution of $952.00 as the amount of the contingent credit instead of the original $1904.00 representing the second or contingent quarter of the price of the machine,—this in view of the fact that the machine had been re-possessed, and that therefore any consideration given by the Company under the provisions of third paragraph of the agreement would have to be a cash consideration instead of a credit against merchandise. The deal was really fulfilled, and the Company not required, under it, to do *anything* more, on April 11th, 1927,—that is two years from the date of the deal. By that time you had been given the primary and certain consideration of a quarter interest in the machine, and you had used up this quarter interest in wear and tear of the machine. We did not take back the machine until after its value had dropped considerably below the amount we had against it after crediting you with the amount you had paid in cash, and the amount of the first credit of $1904.00. So we take it that there is no possibility of your referring to the first quarter. And we have endeavored above to set right any misunderstanding there might have been in regard to the second quarter.

The status of the affair at this point is that if anyone of the three contingencies involved occurs before the end of 1928 there will be a payment of $476.00 due you from the Company; but your failure to have paid your account out causes Mr. Smith to object to the payment of this final amount even if it *should* become due, as it is common practice to offset one debt against another.

We trust that the above will clear the matter up, as we would regret having you dissatisfied in regard to fulfillment of the deal.

We are

Yours truly,

KEYSTONE DRILLER COMPANY,
REX DOWNIE.

RRD.FB

DEFENDANT'S EXHIBIT NO. 40.

Keystone Driller Co. Letter to Burn R. Clutter, dated December 17, 1928.

(Filed May 16, 1931.)

[Cases Nos. 964 and 965]

KEYSTONE DRILLER COMPANY
Beaver Falls, Pennsylvania

December 17, 1928.

Mr. Burn R. Clutter,
17 Edgewood Court,
Lakewood, New Jersey.

Dear Burn:

Of course we do not like to have you call us all these hard names, but we do not see that we can do anything about it. At least the writer knows of nothing more to say beyond what is said in our letter of December 4th. We made a contract with you, and we believe that that contract has been or is being correctly and properly discharged. The consideration from you to us was that you conveyed to us whatever possible undetermined rights you might have or might come to have arising out of your Joplin experiment; also, as a part of the reconsideration, you made affidavit as to the abandonment of that experiment. The only circumstance which has arisen and which was not anticipated or provided for in our written deal was that even with the benefit of the $1904.00 credit you were not able to pay out on the machine, and hence that you have nothing at the present time to evidence the credit rendered as the first and certain portion of the consideration from the Company to you. However, our check for $476.00 dated on or about February 16, 1928, evidences the mutual agreement to substitute the $952.00 cash consideration for the original $1904.00 merchandise-credit consideration. The payment of that check represents a going beyond our obligation.

Yours truly,

KEYSTONE DRILLER COMPANY,
REX DOWNIE.

RRD.FB

247

963 963

Uniform Domestic Straight Bill of Lading adopted by Carriers in Official, Southern and Western Classification Territories, March 16, 1922

THIS MEMORANDUM is an acknowledgment that a Bill of Lading has been issued and is not the Original Bill of Lading. It is issued for the convenience and credit of the carrier and of the consignee of the property described in the Original Bill of Lading.

From KEYSTONE DRILLER COMPANY

The property described below is received in apparent good order except as noted (contents and condition of contents of packages unknown), marked, consigned and destined as indicated below, which said carrier (the word carrier being understood throughout this contract as meaning any person or corporation in possession of the property under the contract) agrees to carry to its usual place of delivery at said destination, if on its own road or its own water line, otherwise to deliver to another carrier on the route to said destination. It is agreed, as to each carrier of all or any of said property over all or any portion of said route to destination, and as to each party at any time interested in all or any of said property, that every service to be performed hereunder shall be subject to all the conditions not prohibited by law, whether printed or written, herein contained, including the conditions on back hereof, which are hereby agreed to by the shipper and accepted for himself and his assigns.

At BEAVER FALLS, PA. 7-14-25 192 Shipper's No. 98-1903

Penna. Company Agent's No.

(Mail or street address of Consignee—For purposes of notification only)

Consigned to Clutter Contracting Co.

Destination Tuckerton State of N.J. County of Ocean

Route Penna. c/o Tuckerton RR

(Delivering Carrier) Car Initial N.P. Car No. 68513

Cap. 70000 Wt. 29500

No. Packages	DESCRIPTION OF ARTICLES, SPECIAL MARKS AND EXCEPTIONS	*WEIGHT (Subject to Correction)	Class or Rate	Check Column
1	Model h-25 Keystone Traction Trench Excavator Gas Crawler			
h	Pieces Cutter Bands			
1	Bundle Canopy Rods			
1	Bundle Curtain Poles			
2	Boxes Fittings & Curtains	2870#		
1	Boom & Pin	1h70#		
1	6 Roll Skimmer Scoop	1555#		
	36' car ordered h1' car set in			
	Dunnage 150 h75#			

MAY 16 1931

Rim

If this shipment is to be delivered to the consignee without recourse on the consignor, the consignor shall sign the following statement:
The carrier shall not make delivery of this shipment without payment of freight and all other lawful charges. (See condition 7 of conditions.)

(Signature of consignor)

If charges are to be prepaid, write or stamp here, "To be Prepaid."

Received $ to apply in prepayment of the charges on the property described hereon.

Agent or Cashier.

Per (The signature here acknowledges only the amount prepaid.)

Charges advanced: $

*If the shipment moves between two ports by a carrier by water, the law requires that the Bill of Lading shall state whether it is "Carrier's or shipper's weight."
NOTE.—Where the rate is dependent on value, shippers are required to state specifically in writing the agreed or declared value of the property.
The agreed or declared value of the property is hereby specifically stated by the shipper to be not exceeding

$ per

1451

KEYSTONE DRILLER COMPANY, Shipper, Per

Permanent post office address of shipper, BEAVER FALLS, PA., U. S. A.

Agent, Per

B 261 Form—The Standard Register Co., Dayton, Ohio

No 14012 American Manganese Steel Co., New Castle Del.

Sf Ex 50

Standardized invoice adopted by National Association of Purchasing Agents.

MAY 9 1922

Shipper's Order No. B-30294
Date Shipped
Shipped from
Shipped to
Destination
Shipping Weight

Invoice date 4-26-22
Invoice No. B 6240
F.O.B. New Castle

Buyer's Order No. B-342
Requisition No.
Contract No. 4804
Car No. and Int.
PRR 41490
Via.

This column reserved for use of buyer
P. A. Record No.
With order F P
F.O.B. point
Price
Calculations
Freight
Frt. Chgd. back
Rec'd by P. A.
Sent by P. A.
To outer off.
From outer off.

CHECKED
INVOICE

APR 29 1922

Terms:

30 Days Net

THE BROWN HOISTING MACHINERY COMPANY
4403 St. Clair Avenue
CLEVELAND, OHIO, U.S.A.

APR 28 1922

Charge Account Approved Approved

Quantity	Description	Weight	Price	Amount	Total
1	Tooth 29332/1	15	.20-10%	2 70	
1	Tooth 29333/1	15	.20-10%	2 70	5 40

964-965

50

MAY 16 1931

Defendants Exhibit "50"

Material described above received in good order
(Signed) (Title) DATE

DEFENDANT'S EXHIBIT NO. 50 - Sheet 1.

249

Nº 14012

American Manganese Steel Co.,
New Castle
Del.

Standardized invoice adopted
National Association of
Purchasing Agents.
F. 581 5m 2-22

Shipper's Order No. B-30[illegible]4
Date Shipped
Shipped from
Shipped to
Destination
Shipping Weight

Invoice date 4-26-22
Invoice No. B 6240
F.O.B. New Castle

Buyer's Order No. B-[illegible]42
Requisition No.
Contract No. 4804
Car No. and Int.
PRR 41480
Via.

This column reserved for use of buyer
P. A. Record No.
CHECKED
With order
F.O.B. point
Price
Calculations
Freight
Frt. Chgd. back
INVOICE
Rec'd by P. A.
Sent by P. A.
To outer off.
From outer off.

Terms:

30 Days Net

THE BROWN HOISTING MACHINERY COMPANY
4403 St. Clair Avenue
CLEVELAND, OHIO, U.S.A.

RECEIVED
APR 28 1922
Answered

Charge Account Approved Approved

Quantity	Description	Weight
1	Tooth 28332/1	15
1	Tooth 28333/1	15

STOCK
MAY 1922

MAY 4 1922

Material described above received in good order
(Signed) [signature] (Title)

DATE

DEFENDANT'S EXHIBIT NO. 50, Sheet 2

251

...rican Manganese Steel Co.,
New Castle
Del.

Standardized invoice adopted by National Association of Purchasing Agents.

F. 561 Im 3-22

B-30294

Invoice date 4-26-22
Invoice No. B 6240
F.O.B. New Castle

Buyer's Order No. B-.42
Requisition No.
Contract No. 4804
Car No. and Int.
PRR 41490
Via

This column reserved for use of buyer
P. A. Record No.
CHECKED: With order / F.O.B. point / Price / Calculations / Freight / Frt. Chgd. back
INVOICE: Rec'd by P. A. / Sent by P. A. / To outer off. / From outer off.

...rom
...pped to
Destination
Shipping Weight

Terms:

30 Days Net

STOCK

RECEIVED
APR 28 1922

THE BROWN HOISTING MACHINERY COMPANY
4403 St. Clair Avenue
CLEVELAND, OHIO, U. S. A.

Approved
Referred to

Charge Account
Approved
Approved

Quantity	Description	Weight	Price	Amount	Total
1	Tooth 29332/1	15	.20-10%	2 70	
1	Tooth 29333/1	15	.20-10%	2 70	5 40

Material described above received in good order
(Signed) _____ (Title)
DATE

DEFENDANT'S EXHIBIT NO. 50 - Sheet 3

No 37886 American Manganese Steel Company,
New Castle,
Delaware.

Def Ex 51

Standardized Invoice adopted by National Association of Purchasing Agents.
F. 501 10m 6-23

Shipper's Order No. B-38336 Invoice date 6/27/24 Buyer's Order No. B-20346
Date Shipped 6/27/24 Invoice No. B-2170 Requisition No. 200370
Shipped from New Castle, Del. F.O.B. New Castle, Del. Contract No.
Shipped to Cleveland, O. Car No. and Int.
Destination same
Shipping Weight 55#

This column reserved for use of buyer
P. A. Record No. 1/2 7/1
With order
F. O. B. point
Price
Calculations
Freight
Frt. Chgd. back
Rec'd by P. A.
Sent by P. A.
To outer off.
From outer off.

American Railway Express

Terms: 30
Days Net

THE BROWN HOISTING MACHINERY COMPANY
4403 St. Clair Avenue
CLEVELAND, OHIO, U.S.A.

RECEIVED
JUN 30 1924
Answered
Referred to

VOUCHERED
JUN 30 1924
NO. 4

Charge Account Approved Approved

Quantity	Description			Weight	Price	Amount	Total
					Less 10%		
1	Tooth	30835/1	79918	55#	.1775 lb.	8 78	8 78
		964.965					
		51					

Defendants Exhibit 51
3 Sheets

Material described above received in good order

SHEET 1.

255

No. 27886 American Manganese Steel Company.

No. 37886 American Manganese Steel Company.
New Castle,
Delaware.

Standardized invoice adopted by National Association of Purchasing Agents.
F. 501 10m 6-23

Shipper's Order No. B-88336
Date Shipped 6/27/24
Shipped from New Castle, Del.
Shipped to Cleveland, O.
Destination same
Shipping Weight 55#

Invoice date 6/27/24
Invoice No. B-2170
F.O. New Castle, Del.

Buyer's Order No. B-20346
Requisition No. 20370
Contract No.
Car No. and Int.

Via American Railway Express Co.

This column reserved for use of buyer
P. A. Record No.
With order
F. O. B. point
Price
Calculations
Freight
Frt. Chgd. back
Rec'd by P. A.
Sent by P. A.
To outer off.
From outer off.

Terms: 30 Days Net

THE BROWN HOISTING MACHINERY COMPANY
4403 St. Clair Avenue
CLEVELAND, OHIO, U.S.A.

RECEIVED
JUN 30 1924

Ft. F. G.
JUL 1 1924

Charge Account Approved Approved

Quantity	Description			Weight
1	Tooth	20833/1	79918	55#

C. A. S.
JUL 2 1924

DRAY SLIP SENT 7-1-24

ACCT. 21

Material described above received in good order 7-1-24
(Signed) B. [illegible] (Title) ——

DEFENDANT'S EXHIBIT No. 51 - Sheet 2

AMERICAN MANGANESE STEEL CO.

B 21.0

(AMSCO) CHICAGO HEIGHTS, ILL.
NEW CASTLE WORKS

DATE June 27, 1924.

TERMS: 30 DAYS NET
F. O. B. NEW CASTLE, DEL.

RECEIVED JUN 30 1924
Answered
Entered in

SOLD TO The Brown Hoisting Machinery Co.,
ADDRESS Cleveland, Ohio.

DATE SHIPPED June 27, 1924.
VIA American Railway Express Co.
CAR NO.
INITIAL

SHIPPED TO The Brown Hoisting Machinery Co.,
ADDRESS Cleveland, Ohio.
TERR. WGB

PLEASE REMIT IN CHICAGO OR NEW YORK EXCHANGE TO AMERICAN MANGANESE STEEL CO., CHICAGO HEIGHTS, ILL.

TAL

YOUR ORDER NO.	YOUR REQ. NO.	NO. PCS.	MANGANESE STEEL			WEIGHT	PRICE	AMOUNT
B-38336	B-20346 200370	1	Teeth	30835/1	79918	55#	.1775 lt. Less 10%	8.78

ORIGINAL

DEFENDANT'S EXHIBIT NO. 51 - Sheet 3

Def Ex 52

D 4804 June 6,1922 Contract signed 2/2/22
June 2, 1922 2788
Cleveland, O. Our Wks.Cleve.

Janesville, Wis. N.YC.

S.G. Cool,
123 N. Wells St.,
Chicago, Ill.

Brownhoist Shoveling attachment with
1 Yd. Shovel Bucket for #2 Brownhoist
Loco. Crane #8732. 980 00

D 6480 June 6,1922 6521
June 2,1922 2788
Cleveland, O. Our Wks. Cleve.
The Huntington Iron Works,
839-847 Adams Ave.,
Huntington, W. Va. B&O

The Yale Towne Mfg. Co.,

Stamford, Conn.

Clamps Style "D" 1/2 ton for 8" at
18.42 I Beam (without straps.) 1 50 33 00

DEFENDANT'S EXHIBIT NO. 52 - Sheet 1

Invoice sheet 2788 of the Brown Hoisting Machinery Company Referring to Order D-4804 to S. G. Cool.

Sheet 2 following is Account Book Page No. 2 of The Brown Hoisting Machinery Company Referring to Order D-4804 to S. G. Cool.

The Brown Hoisting Machinery Co., Cleveland, Ohio, U. S. A.

Df Ex 52
Sheet 2

Name S. G. COOL
Address 128 N. WELLS STREET, CHICAGO, ILLINOIS
Attention of

Account No.
Page No. 2

OLD BALANCE	POSTING REFERENCE	OUR ORDER	DATE 1922	YOUR ORDER	ITEMS	DEBITS	CREDITS	BALANCE	
					Brought Forward				
			MAY					1051 25	--
1051 25	SB-2530	D-5298	4/27	CONT.DAT. 2/28/22	BUCKET RETD.		950 00		
	SB-2526	D-6274	9	LET.5/1/22 S.G.COOL	LINK ETC	18 00		119 25	☆ S G CC
119 25	SB-2684	D-6091	4/29	PH.4/19/22-MATL.RETD.			25 50		
	SB-2684	D-5045	25		TO CANCEL INV.4/11/22		20 75	73 00	☆ S G CC
73 00	SB-2718	D-6546	29	LET.5/17/22-GRATE BAR		9 00		82 00	☆ S G CC
82 00	CB-744		31		CASH		55 00	27 00	☆ S G CC
			JUNE						-
27 00	SB-2788	D-4804	6	CONT.DAT. 2/2/22	SHOVELING ATTACHMENT	980 00		1007 00	☆ S G CC
1007 00	CB-751		8		CASH		27 00	980 00	☆ S G CC
980 00	SB-2891	D-6748	16	LET.5/29/22-GRATE BARS		14 00		994 00	☆ S G CC
			JULY						-
994 00	CB-774		5		CASH		994 00	0 00	☆ S G CC
			OCT						--
0 00	SB-4291	D-9203	12		SEGMENTS	2 48		2 48	☆ S G CC
2 48	CB-865		21		CASH		2 48	0 00	☆ SG COC
			NOV-						-
0 00	SB-4811	D-10112	21		SHEAVE	9 00		9 00	☆ S G CC
			DEC						-
9 00	CB-908		12		CASH		9 00	0 00	☆ S G CC
			1923 SEPT						-
0 00	SB-9587	Z-19493	7		CAP ETC	40 00		40 00	☆ S G CC
40 00	CB-1146		21		CASH		40 00	0 00	☆S G COC
0 00	SB-9742	Z-19633	17	LET.9/13/23-SHAFT		27 50			
	SB-9839	Z-19746	20	PH.9/20/23-GEAR		16 50		44 00	G CC
			OCT						-
44 00	CB- 1155		2		CASH		27 50	16 50	☆ S G CC
16 50	CB-1167		16		CASH		16 50	0 00	☆ S G CC
0 00	SB-241	Z-20085	13	PH.10/9/23-CAP		12 00			
	SB-312	Z-20222	17	PH.10/17/23-SHAFT		60 00		72 00	☆ S G CC

Carried Forward

DEFENDANT'S EXHIBIT NO. 89.

MAY 16 1931

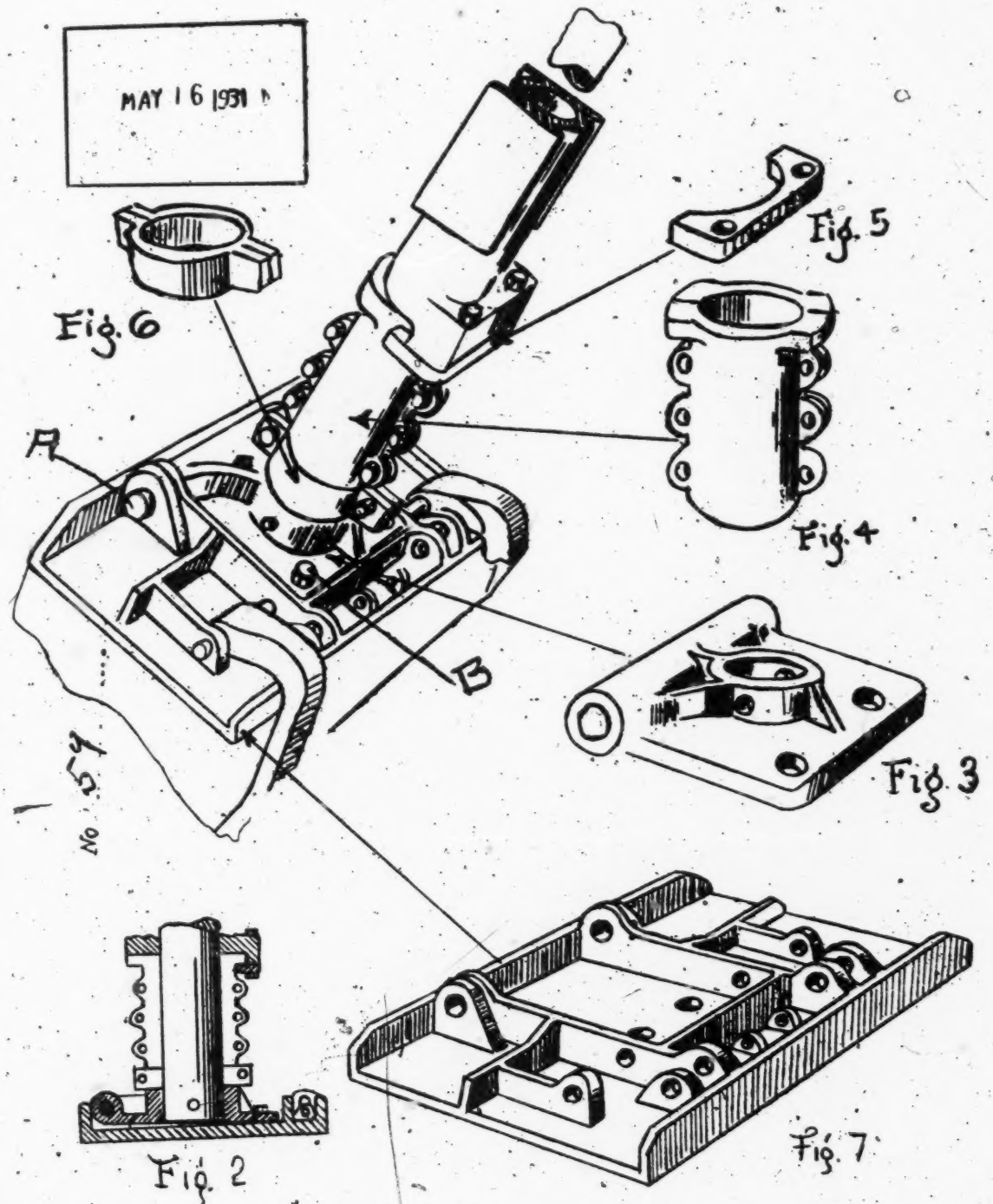

Fig. 6

Fig. 5

Fig. 4

Fig. 3

Fig. 2

Fig. 7

964- 965 Equity

Defendant's Exhibit

No. 61

FILED
MAY 16 1931

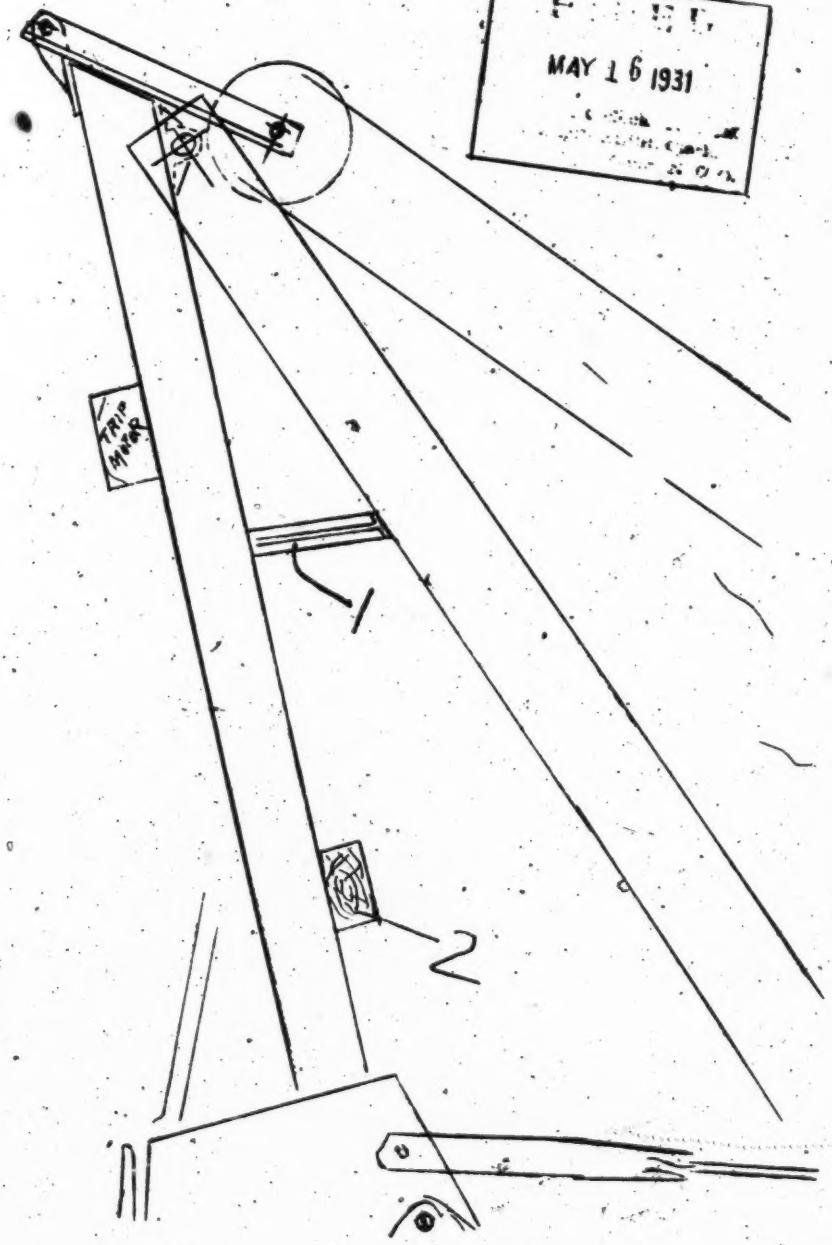

DEFENDANT'S EXHIBIT NO. 62(20)

Book of Patents

U. S. Patent No. 557,350, March 31, 1896

To J. B. Webber

Steam Shovel or Excavator

(Filed May 16, 1931)

[Cases Nos. 964 and 965]

PRINTER'S NOTE:

This patent having been reproduced hereinbefore as Defendant's Exhibit No. 20, the same is omitted at this point to avoid duplication. (See Page 193 of Exhibits, Vol. III.)

DEFENDANT'S EXHIBIT NO. 62(21)

Book of Patents

U. S. Patent No. 579,589, March 30, 1897

To G. W. King

Steam Shovel or Excavator

(Filed May 16, 1931)

[Cases Nos. 964 and 965]

PRINTER'S NOTE:

This patent having been reproduced hereinbefore as Defendant's Exhibit No. 53, the same is omitted at this point to avoid duplication. (See Page 265 of Exhibits, Vol. III.)

United States Circuit Court of Appeals

FOR THE SIXTH CIRCUIT.

No. 964.

GENERAL EXCAVATOR COMPANY,
Appellant,

vs.

KEYSTONE DRILLER COMPANY,
Appellee.

KEYSTONE DRILLER COMPANY,
Cross-Appellant,

vs.

GENERAL EXCAVATOR COMPANY,
Cross-Appellee.

No. 965.

THE OSGOOD COMPANY,
Appellant,

vs.

KEYSTONE DRILLER COMPANY,
Appellee.

KEYSTONE DRILLER COMPANY,
Cross-Appellant,

vs.

THE OSGOOD COMPANY,
Cross-Appellee.

APPEALS FROM THE UNITED STATES DISTRICT COURT,
FOR THE NORTHERN DISTRICT OF OHIO,
WESTERN DIVISION.

TRANSCRIPT OF RECORD
VOLUME IV
DEFENDANTS' EXHIBITS (Concluded)

NAMES AND ADDRESSES OF COUNSEL
(Inside Front Cover)

INDEX

VOLUME IV

DEFENDANTS' EXHIBITS

Cases Nos. 964 and 965

(Continued)

No. 62. Prior Art Patents and Patents in Suit (Continued):
(Offered on Page 558 of Vol. I)

				Printed Vol. IV
(44)	826,051	Olson	July 17, 1906	665
(45)	842,904	Nelson	Feb. 5, 1907	673
(46)	857,577	Becker	June 25, 1907	683
(47)	872,439	Livingood	Dec. 3, 1907	687
(48)	875,432	Hetlesnefer	Dec. 31, 1907	691
(49)	876,517	Benedick	Jan. 14, 1908	695
(50)	881,529	Baker	Mar. 10, 1908	701
(51)	881,695	Kersey	Mar. 10, 1908	711
(52)	892,508	Fairbanks	July 7, 1908	719
(53)	929,468	Robertson	July 27, 1908	727
(54)	970,750	Potter	Sept. 20, 1910	741
(55)	976,088	Martinson	Nov. 15, 1910	757
(56)	997,542	Bunnell	July 11, 1911	765
(57)	998,029	Munn	July 18, 1911	775
(58)	999,953	Boehm	Aug. 8, 1911	783
(59)	1,014,293	Gade	Jan. 9, 1912	795
(60)	1,023,356	Bathrick	Apr. 16, 1912	799
(61)	1,037,429	Bunnell	Sept. 3, 1912	809
(62)	1,047,991	Robinson	Dec. 24, 1912	819
(63)	1,056,268	Fairbanks	Mar. 18, 1913	823
(64)	1,057,457	Rood	Apr. 1, 1913	825
(65)	1,064,120	Bansmer	June 10, 1913	835

				Printed Vol IV
(66)	1,077,467	Gardner	Nov. 4, 1913	843
(67)	1,100,864	Bishop	June 23, 1914	851
(68)	1,103,476	Bishop	July 14, 1914	859
(69)	1,107,252	Black	Aug. 18, 1914	867
(70)	1,107,899	Clutter	Aug. 18, 1914	873
(71)	1,147,432	Potter	July 20, 1915	875
(72)	1,194,204	Mahoney	Aug. 8, 1916	885
(73)	1,208,230	Sweet, et al.	Dec. 12, 1916	887
(74)	1,225,537	Wagner	May 8, 1917	897
(75)	1,228,654	Downie	June 5, 1917	911
(76)	1,233,574	Hemme	July 17, 1917	921
(77)	1,237,878	Downie	Aug. 21, 1917	925
(78)	1,237,879	Downie	Aug. 21, 1917	937
(79)	1,239,554	Armstrong	Sept. 11, 1917	943
(80)	1,245,118	Moore	Oct. 30, 1917	949
(81)	1,249,805	Morison, et al.	Dec. 11, 1917	959
(82)	1,265,730	Billings	May 14, 1918	961
(83)	1,269,149	Anderson	June 11, 1918	979
(84)	1,281,379	Hudson	Oct. 15, 1918	989
(85)	1,283,460	Bentson	Nov. 5, 1918	4003
(86)	1,288,514	Clutter	Dec. 24, 1918	4015
(87)	1,289,395	Clutter	Dec. 31, 1918	1033
(88)	1,315,512	Keith	Sept. 9, 1919	1039
(89)	1,316,058	Pugh	Sept. 16, 1919	1047
(90)	1,317,431	Clutter	Sept. 30, 1919	1057
(91)	1,322,570	Hoar	Nov. 25, 1919	1059
(92)	1,339,606	Pugh	May 11, 1920	1067
(93)	1,340,385	Edmondson	May 18, 1920	1077
(94)	1,378,970	Moore	May 24, 1921	1085

				Printed Vol. IV
(95)	1,385,322	Hoffmeyer	July 19, 1921	1095
(96)	1,430,542	French	Oct. 3, 1922	1099
(97)	1,446,389	McGrew	Feb. 20, 1923	1109
(98)	Re 15,685	Horr	Sept. 18, 1923	1113
(99)	1,474,314	Burke	Nov. 13, 1923	1121
(100)	1,476,124	Wagner, et al.	Dec. 4, 1923	1125
(101)	1,479,849	Williams	Jan. 8, 1924	1137
(102)	1,485,198	Pugh	Feb. 26, 1924	1143
(103)	1,489,042	Pugh	Apr. 1, 1924	1153
(104)	1,503,813	Burke	Aug. 5, 1924	1165
(105)	1,511,114	Downie	Oct. 7, 1924	1173
(106)	1,515,783	Luce	Nov. 18, 1924	1175
(107)	1,518,314	Downie	Dec. 9, 1924	1183
(108)	1,543,250	Downie	June 23, 1925	1191
(109)	1,560,136	Benison	Nov. 3, 1925	1193
(110)	1,561,694	Clutter	Nov. 17, 1925	1199
(111)	1,562,288	Burke	Nov. 17, 1925	1209
(112)	1,580,725	Harrison	Apr. 13, 1926	1219
(113)	1,599,630	Bager, et al.	Sept. 14, 1926	1223
(114)	1,609,372	Lichtenberg	Dec. 7, 1926	1229
(115)	1,611,195	Jelen	Dec. 21, 1926	1237
(116)	1,648,783	Rosselle	Nov. 8, 1927	1247
(117)	1,709,466	Downie	Apr. 16, 1929	1253
(118)	1,716,432	Downie	June 11, 1929	1253

British Patents:

(119)	No. 655 of 1882	D'Alton	Aug. 10, 1882	1255
(120)	No. 6,266 of 1899	Cheffins	Mar. 23, 1899	1269
(121)	No. 9,893 of 1899	Whitaker	May 10, 1899	1277
(122)	No. 11,496 of 1903	Jubb	May 20, 1903	1283

		Offered Vol. I	Printed Vol. IV
No. 63.	Paige Drag Shovel Circular	558	W
No. 64.	Certified Copy of File Wrapper of Clutter Patent 1,317,431	558	W
No. 65.	Certified Copy of the File Wrapper and Contents of the Robert Rex Downie Patent 1,511,114, dated Oct. 7, 1924	558	W
No. 66.	Certified Copy of the File Wrapper and Contents of Robert Rex Downie Patent 1,709,466, dated April 16, 1929	558	W
No. 67.	Certified Copy of the File Wrapper and Contents of Robert Rex Downie Patent 1,543,250, dated June 23, 1925	558	W

		Offered Vol. II	Printed Vol. IV
No. 68.	Drawing No. 258	619	W
No. 69.	Osgood Dredge Company Drawing No. 484	619	W
No. 70.	Blueprint	632	W
No. 71.	Photograph	632	W
No. 72.	Photograph	632	W
No. 73.	Illustrated Charts 64A, 27, 28, 29 and 30	638	W
No. 74.	Osgood Photograph No. 3346	648	W
No. 75.	Title page of the American Railroad Ditcher Company Catalogue, and the copyright on the page following that, showing copyright notice of the American Hoist & Derrick Company, of St. Paul, and also page 37 of that Catalogue	648	W
No. 76.	Photograph	672	W
No. 77.	Photograph	672	W
No. 78.	Photograph	672	W
No. 79.	Photograph	672	W

		Offered Vol. II	Printed Vol. IV
No. 80.	U. S. Patent No. 1,249,805, Dec. 11, 1917, to G. A. Morison, S. R. W. M. Bager & G. F. Knoser for Dipper	672	1291
No. 81.	Chart 102	679	W
No. 82.	Tooth formerly used by General Excavator Company	703	W
No. 83.	Certified Copy of the File Wrapper and Contents of Downie Patent No. 1,716,432	703	W
No. 84.	Defendant's Chart No. 20	705	W
No. 85.	Defendant's Chart No. 60	705	W
No. 86.	Defendant's Charts Nos. 45 and 46	705	W
No. 87.	Defendant's Chart No. 40	705	W
No. 88.	Defendant's Chart No. 17	705	W
No. 89.	Defendant's Chart No. 14	705	W
No. 90.	Defendant's Chart No. 13	705	W
No. 91.	Defendant's Chart No. 101	705	W
No. 92.	Defendant's Chart No. 160	729	W
No. 93.	Ledger Sheet of Keystone Driller Company	772	W
No. 94.	Ledger Sheet of Keystone Driller Company	772	W
No. 95.	Keystone Driller Co. Letter to B. R. Clutter, dated Feb. 14, 1925	773	1297
No. 96.	Duplicate original of Contract between Keystone Driller Company and Clutter for purchase of first Keystone excavator, the one on which there was to be a credit given	773	W
No. 97.	Invoice for Excavator, from Keystone Driller Co. to Clutter Contracting Co., dated March 9, 1925	773	1297
No. 98.	Unsigned Agreement between Burn R. Clutter and the Keystone Driller Co.	773	1298

	Offered Vol. II	Printed Vol. IV
No. 99. Receipt from the Keystone Driller Co. to Clutter for $500.00, dated April 14, 1925 ...	773	1299
No. 100. Receipt from the Keystone Driller Co. to Clutter for $515.00, dated May 23, 1925	773	1300
No. 101. Chattel Mortgage on First Machine from Clutter to Keystone	773	W
No. 102. Keystone Driller Co. Credit Manager Letter, dated March 16, 1926, to B. R. Clutter, and Bank Notice	773	1300
No. 103. Carbon Copy of Letter, dated January 15, 1927, from Keystone Driller Co. Credit Manager to B. R. Clutter	773	1301
No. 104. Original Letter from Clutter to Rex Downie, dated January 9, 1928	773	1303
No. 105. Carbon Copy of Letter, dated January 18, 1928, from Keystone Driller Co. to B. R. Clutter	773	1309
No. 106. Original Letter from B. R. Clutter to Rex Downie, dated February 6, 1928	773	1310
No. 107. Carbon Copy of a Letter from Keystone Driller Co. by Downie, to B. R. Clutter, dated Feb. 16, 1928	773	1311
No. 108. Cancelled Check, dated Feb. 16, 1928, from Keystone Driller Co. to B. R. Clutter for $476.00	774	1312
No. 109. Original Letter from B. R. Clutter to Rex Downie, dated 11/15/28	774	1313
No. 110. Original Letter, dated Nov. 28, 1928, from B. R. Clutter to Rex Downie	774	1313
No. 111. Letter, dated 11[12]/13/28, from B. R. Clutter to Rex Downie	774	1315
No. 112. Original Letter, dated April 20, 1929, from Geo. E. Wagner to J. V. Downie, % Keystone Driller Co., and Envelope	774	1317

	Offered Vol. II	Printed Vol. IV
No. 113. Affidavit of Clutter, dated April 16, 1925 ..	777	W
No. 114. Original of the Memorandum Agreement unsigned between Clutter and Keystone Driller Co., being original of which Exhibit No. 98 is a carbon copy	818	1323
No. 115. U. S. Patent No. 1,249,805; Dec. 11, 1917, to G. A. Morison, S. R. W. M. Bager & O. F. Kaeser, for Dipper (Same as Defendant's Exhibit No. 80)	892	1291
No. 116. Bucyrus Company Drawing L-881, dated Aug. 19, 1915	893	W
No. 117. Group of Photographs—Nos. 2783-A, 2783-B and 2733-A, B, C, D and E	894	W
No. 118. Bucyrus Drawing No. 35,576, dated Jan. 31, 1918, entitled "General Drawing of 6-B front dumping dipper"	899	W
No. 119. Group of Photographs—Nos. 3049-A, B, C and D of dipper manufactured by the Bucyrus-Erie Company in accordance with Bucyrus drawing No. 35,576	899	W
No. 120. Photostatic Copy of Invoice M-56735, dated July 23, 1918	915	W
No. 121. Photostatic Copy of Bucyrus Company Ledger Sheet Index No. 1, sheet 1, of the contract account with the Chile Exploration Company	916	W
No. 122. Bucyrus Company original Invoice No. 70561, dated Oct. 11, 1919, to the Chile Exploration Company, New York, N. Y. ..	916	W
No. 123. Photostatic Copy of both sides of Bucyrus Company Ledger Sheet, Index No. 63, sheet 7	917	W
No. 124. Group of Blueprints—G 1-2145-A, dated Aug. 24, 1917; L-71838, dated Feb. 5 and 6, 1918; and photostatic copy of blueprint 1-B-2145, dated July 23, 1918	920	W

	Offered Vol. II	Printed Vol. IV
No. 125. Photostatic Copy of Repair Order 8053-96139, of the Bucyrus-Erie Company, dated Sept. 13, 1919, for dipper front for 225-B shovel, Serial No. 2145, for the Chile Exploration Company	922	W
No. 126. Chile Exploration Company Order No. 10583, Requisition No. 6X10329, dated June 21, 1917, for one 225-B electric shovel; letter of Sept. 22, 1917, from Chile Exploration Company to Bucyrus Company; letter of April 9, 1919, from the Chile Exploration Company, Chiquicamata, Chile, to the Bucyrus Company, and page 6 of Specification No. 1977; forming a part of this order	927	W
No. 127. Motion Picture Film showing the 225-B Bucyrus electric shovel with the front dumping dipper thereon in operation in the mine of the Chile Exploration Company at Chiquicamata, Chile, South America	930	W
No. 128. Group of Pictures taken from the Film of Exhibit No. 127	944	W
No. 129. Affidavit of Robert Rex Downie, dated Dec. 30, 1930	1039	1324

DEFENDANT'S EXHIBIT NO. 62(63)

Book of Patents

U. S. Patent No. 1,056,268, Mar. 18, 1913,

To J. G. Fairbanks

Excavating Apparatus

(Filed May 16, 1931)

[Cases Nos. 964 and 965]

PRINTER'S NOTE:

This patent having been reproduced hereinbefore as Defendant's Exhibit No. 29, the same is omitted at this point to avoid duplication. (See Page 225 of Exhibits, Vol. III.)

DEFENDANT'S EXHIBIT NO. 62(70)

Book of Patents

U. S. Patent No. 1,107,899, Aug. 18, 1914,

To L. P. Clutter

Excavator

(Filed May 16, 1931)

[Cases Nos. 964 and 965]

PRINTER'S NOTE:

This patent having been reproduced hereinbefore as Defendant's Exhibit No. 25, the same is omitted at this point to avoid duplication. (See Page 203 of Exhibits, Vol. III.)

DEFENDANT'S EXHIBIT NO. 62(72)

Book of Patents

U. S. Patent No. 1,194,204, Aug. 8, 1916,

To D. H. Mahoney

Ditching Machine

(Filed May 16, 1931)

[Cases Nos. 964 and 965]

PRINTER'S NOTE:

This patent having been reproduced hereinbefore as Defendant's Exhibit 3, the same is omitted at this point to avoid duplication. (See Page 185 of Exhibits, Vol. III.)

DEFENDANT'S EXHIBIT NO. 62(81)

Book of Patents

U. S. Patent No. 1,249,805, Dec. 11, 1917,

To G. A. Morison, S. R. W. M. Hager & O. F. Kaeser

Dipper

(Filed May 16, 1931)

[Cases Nos. 964 and 965]

PRINTER'S NOTE:

This patent having been introduced in evidence as Defendant's Exhibit No. 80 and also as Defendant's Exhibit No. 115, and having been reproduced hereinafter as Defendant's Exhibit No. 80, the same is omitted at this point to avoid duplication. (See Page 1291 of Exhibits, Vol. IV.)

DEFENDANT'S EXHIBIT NO. 62(90)

Book of Patents

U. S. Patent No. 1,317,431, Sep. 30, 1919,

To LeRoy P. Clutter

Ditching or Excavating Machine

(Filed May 16, 1931)

[Cases Nos. 964 and 965]

PRINTER'S NOTE:

This patent having been introduced in evidence as Plaintiff's Exhibit No. P-1, and also as Defendant's Exhibit No. 24, and having been reproduced hereinbefore as Plaintiff's Exhibit No. P-1, the same is omitted at this point to avoid duplication. (See Page 91 of Exhibits, Vol. III.)

DEFENDANT'S EXHIBIT NO. 62(105)

Book of Patents

U. S. Patent No. 1,511,114, Oct. 7, 1924,

To R. R. Downie

Excavating Machine

(Filed May 16, 1931)

[Cases Nos. 964 and 965]

PRINTER'S NOTE:

This patent having been reproduced hereinbefore as Plaintiff's Exhibit No. P-2, the same is omitted at this point to avoid duplication. (See Page 97 of Exhibits, Vol. III.)

DEFENDANT'S EXHIBIT NO. 62(108)

Book of Patents

U. S. Patent No. 1,543,250, Jun. 23, 1925,

To R. R. Downie

Excavating Machine

(Filed May 16, 1931)

[Cases Nos. 964 and 965]

PRINTER'S NOTE:

This patent having been reproduced hereinbefore as Plaintiff's Exhibit No. P 3, the same is omitted at this point to avoid duplication. (See Page 109 of Exhibits, Vol. III.)

DEFENDANT'S EXHIBIT NO. 62(117)

Book of Patents

U. S. Patent No. 1,709,466, April 16, 1929,

To R. R. Downie

Ditcher Scoop Assembly

(Filed May 16, 1931)

[Cases Nos. 964 and 965]

PRINTER'S NOTE:

This patent having been reproduced hereinbefore as Plaintiff's Exhibit No. P-4, the same is omitted at this point to avoid duplication. (See page 119 of Exhibits, Vol. III.)

DEFENDANT'S EXHIBIT NO. 62(118)

Book of Patents

U. S. Patent No. 1,716,432, June 11, 1929,

To R. R. Downie.

Excavating Scoop

(Filed May 16, 1931)

[Cases Nos. 964 and 965]

PRINTER'S NOTE:

This patent having been reproduced hereinbefore as Plaintiff's Exhibit No. P-5, the same is omitted at this point to avoid duplication. (See Page 129 of Exhibits, Vol. III.)

Specification. A.D. 1882.—N° 655. 1255

D'Alton's Improvements in Machinery for Excavating, &c.

SPECIFICATION in pursuance of the conditions of the Letters Patent filed by the said Patrick Walter D'Alton in the Great Seal Patent Office on the 10th August 1882.

PATRICK WALTER D'ALTON of Fenchurch Street in the City of London Mechanical Engineer "IMPROVEMENTS IN MACHINERY FOR EXCAVATING AND CUTTING INTO EARTHY AND STONY MATERIALS."

According to this Invention and instead of toothed gearing and chains hitherto usually employed I employ direct acting cylinders and pistons for effecting the various motions required in machines for excavating and I impart motion to such pistons by fluid under pressure such as steam water or compressed air. These pistons are by lever connections and by an upright swinging post or pillar frame made to actuate the scoop or other excavating or cutting tool or tools so that the latter may at the operator's will receive a forward digging or cutting motion and if desired in a more or less upward or downward direction, a receding motion to get clear of the face of the material operated on, a swinging motion round the upright post, and in some cases a partially rotating motion. The aforesaid power cylinder pistons are by preference actuated by water exposed to steam pressure and contained in vessels.

And in order that this my Invention may be fully understood and readily carried into effect I will describe one arrangement with reference to the accompanying Drawings of which Figure 1 is a side elevation, Figure 2 an end elevation and Figure 3 a plan and Figures 4 and 5 are detail views in end elevation and longitudinal vertical section respectively of a part of the rotating pillar D Figure 6 is a horizontal section of same on line A B of Figure 5. Figures 7 and 8 are respectively end elevation and vertical longitudinal section shewing in detail a different arrangement or modification of the arrangement of joint and gland for pipes passing through upright pillar D. Figure 9 is a side view and Fig. 10 a plan of gear for rotating the pillar D.

The machine is arranged on a strong wrought iron bed frame A, which is supported on four wheels A^1 these latter run on rails. The frame A carries at one end an upright steam boiler B with donkey engine B^1 or other boiler feeder. The bed frame A carries near its other end a crane like post C also made of wrought iron and forming the upper bearing C^1 for the wrought iron upright pillar frame D this latter is at top and bottom fitted with pivots D^1 and D^2 respectively, so that it can rotate around its axis. To the frame D near the lower end is connected a second frame E which I call the lever frame and which can swing up and down round a pivot or gudgeon E^2, the lever frame E is doubled or consists of two side pieces which are united by intermediate diagonal bracing connecting pieces.

To the top of the lever frame E is jointed a third frame F which I call the scoop frame or arm which is made double consisting of two sides each having three parts or members forming a triangle and with a strut piece between the base and the apex. To the lower end of the scoop frame F is fixed an excavating scoop F^1 (or it might be some other digging or cutting tool); the scoop is in this case shown as provided with a lower central pick F^2 and two lateral picks F^3; it has also the usual lever gear for detaching and opening the bottom F^4 when the contents of the scoop are to be discharged.

The Drawing shews the manner in which the parts of the scoop frame F are rivetted together. The scoop F^1 is united to the scoop frame F by means of a joint bolt F^5 and in order that the position or inclination of the scoop F^1 or picks F^2, F^3 may be adjusted as the work requires it the scoop is also united to a gudgeon G^2

on the scoop frame F by means of two links G G that connect on to gudgeons G^1 on the scoop and are made adjustable in length by means of the right and left handed running sockets or nuts G^2.

Near the bottom end of the pillar frame D (in fact as here shewn in the line of the axis of the gudgeon E^1 on which the lever frame E swings) are bearings which carry the trunnions of an oscillating cylinder H containing a piston, the outer end of its piston rod H^1 is jointed to the scoop arm F by means of the gudgeon H^2 at some point between the pivot E^2 at the top of it and the scoop F^1 at the bottom of it. H^3 is a helical spring connecting the cylinder H to the lever frame E for the purpose of exerting an upward pull on the cylinder H so as to relieve the piston rod from the weight of the cylinder.

To some point on the pillar frame D I fit a second cylinder I (see Figures 1, 4 and 5) the piston rod I^1 of which by means of crosshead I^2 and two chains I^3 passing over guide pulleys I^4 is connected to the upper end of the lever frame E, this latter is also by a guy chain I^5 secured to the pillar frame D.

Close to the steam boiler B I place two vessels K K^1 which are steam tight, these vessels are by means of the breeches pipe L connected to a common pipe L^1 from the steam space of the boiler, steam is admitted from the boiler B to the pipes L^1 and L and cylinders K K^1 by the stop valve L^2. On the top of each vessel K K^1 there is a slide valve M, which by means of levers M^1 and M^2 respectively admits of letting the steam into the vessels K or K^1 and of letting this steam escape into exhaust pipes M^3 and M^4. The vessels K K^1 are charged with water or other suitable liquid by means of pipes N from a water tank N^1. The

water or other suitable liquid by means of pipes N from a water tank N^1. The vessel K^1 communicates with the cylinder H by means of the pipe O, Figures 1 and 5 which passes down through the vertical axis of the pillar frame D and enters the cylinder I at the top as shewn in Figures 1 and 5. The vessel K communicates with the cylinder H by means of the pipe O^1 Figures 1 and 5 which is continued into the pipe O^2, this latter is large enough to form an annular space around the upper part of the descending vertical inner pipe O, seen best at Figure 5; O^3 Figures 1 and 5 is a stuffing box provided on the lower end of the outer pipe O^2; from the bottom end of the inner pipe O the bent pipe O^3 is carried down to the top of the cylinder I and from the stuffing box part O^4 (which by lateral openings communicates with the annular space O^2) a pipe O^5 leads to the trunnion of the cylinder H; a modification of this arrangement is shown at Figures 7 and 8. P and P^1 are handles for admitting the water by means of cocks or valves P^2 to the pipes O^1 or O as desired.

In order to rotate the pillar frame D round its pivots D^1 D^2 I may employ an arrangement as shewn in detail in Figures 9 and 10 (but not in the general views Figs. 1, 2 and 3) where S is a third cylinder with piston and a rack T and sector wheel U the latter being fixed on the pillar frame D. All the cocks and valves described are accessible from the platform Q for the attendant. The machine when used for excavating earth or comparatively soft or loose materials is worked as follows. Being brought up on rails to the face of the soil to be excavated the machine is steadied or temporarily secured in position by screwing down the four shoes R on to wooden blocks or planks R^1 which rest on the sleepers or on the ground. Steam is then permitted to pass into the vessel K^1 by suitably opening the slide valve M^1. The water is thereby driven from the vessel K^1 the steam pressing on the upper surface of the water therein (with an intervening loosely fitting piston or float if desired); the water is forced through the pipes O^3 and O^4 into the space below the piston in the cylinder H causing this piston to move outwards and upwards and causing the scoop arm F to move radially round the gudgeon F^2 about one fourth of a revolution in a vertical plane, the scoop F^1 filling itself with earth or other soil as it rises. Then the pillar frame D is caused to rotate (by admitting water under pressure into the cylinder S) swinging round the scoop frame F and the filled scoop F^1 to a position at right angles to the rails which carry the machine, and thus bringing the scoop over the waggons which convey the earth away; the scoop is then by means of the lever

gear for detaching and opening the bottom F^4 emptied into the waggon in the usual manner. By means of the lever M^1 steam is now admitted to the top of the water surface in the vessel K whereby water under pressure through the pipes O^1 O^2 is admitted to the upper part of the cylinder I depressing the piston therein and by means of the piston rod I^1, cross head I^2 and chains I^3 I^3 pulling back or raising the lever frame E. This latter which previously leant forward at the top is now drawn back into about a vertical position. The water above the piston in the cylinder I is allowed to escape back to the vessel K from which the steam has been previously allowed to escape into the exhaust pipe M^2 by suitably moving the lever M^1. The piston in the cylinder I will now be raised by the weight of the scoop F^4, scoop lever F and the parts connected thereto the lever frame E descends in a different path from that in which it ascended thus clearing the earth to be removed. The pillar frame D has been previously caused to rotate back to its original position. This process is repeated the machine being shifted up to the earth to be excavated from time to time as the work proceeds.

For cutting into sandstone chalk or similar materials I prefer to give the cutting tool a forward and downward movement.

And having thus described and ascertained the nature of this Invention and the manner in which it is or may be carried into effect I declare that I claim:—

First:—The combination of parts forming the improved excavating machine consisting of the following main parts *viz*, a bed frame mounted on railway wheels and carrying at one end a steam boiler and at the other end an upright pillar frame having its upper or neck bearing in a crane like post and provided with a lever frame which can be raised and lowered by chain connection to the piston rod of a cylinder on the pillar frame the said lever frame carrying an arm or frame to the lower end of which the scoop or other tool is connected, a cylinder being connected by trunnions to the pillar frame and by its piston rod to the scoop frame so that the latter may thereby be swung backwards or forwards round its fulcrum on the lever frame, the pistons of the said two cylinders being actuated as required by suitable valve gear for admitting steam or water under steam pressure from corresponding closed vessels on the bed frame and for exhausting said steam all substantially as described and shewn.

Second: The application of water under direct steam pressure in closed vessels for actuating pistons in cylinders connected to parts of excavating machines as described.

Third:—The combination of the crane post C, upright pillar frame D, lever frame E scoop frame F, and the cylinders I and H as shown in the accompanying Drawings.

In witness whereof I the said Patrick Walter D'Alton have hereunto set my hand and seal this Ninth day of August in the year of our Lord One thousand eight hundred and eighty two.

P. WALTER D'ALTON. (L.S.)

LONDON: Printed by George E. E. Eyre and William Spottiswoode,
Printers to the Queen's most Excellent Majesty.
For Her Majesty's Stationery Office.

1882.

FIG. 1.

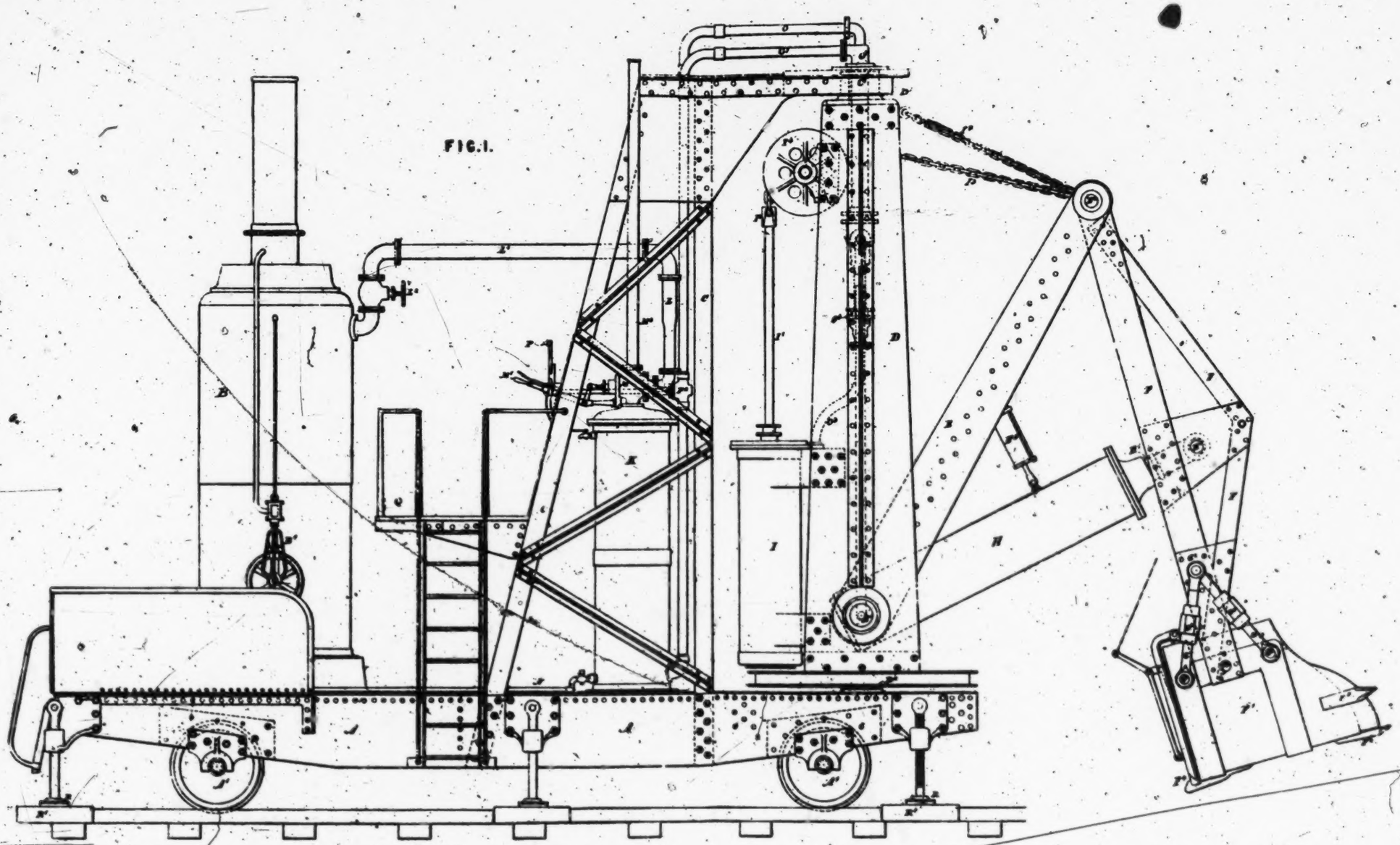

London: Printed for George Edward Eyre and William Spottiswoode,
Printers to the Queen's most Excellent Majesty. 1882.

Malby & Sons, Photo-Litho

A.D. 1882. Feb. 10. N° 655.
D'ALTON'S Specification.

(3 SHEETS)
SHEET 3.

FIG. 2.

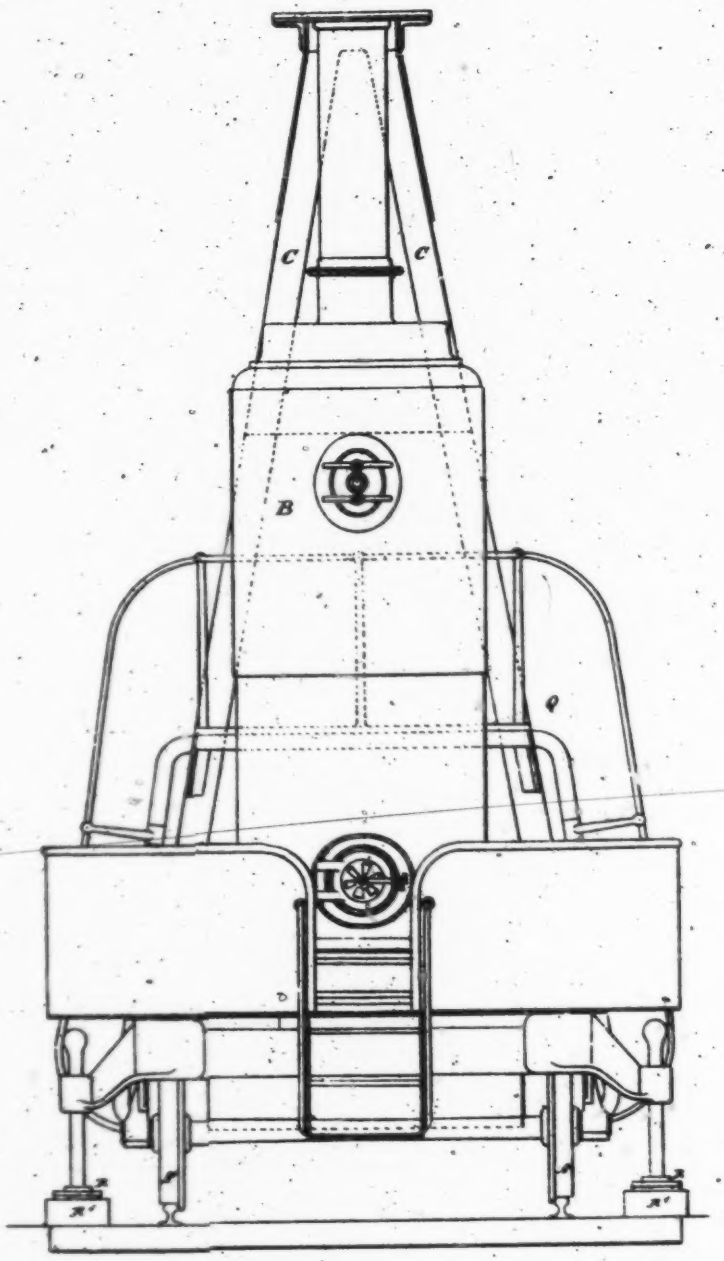

FIG. 3.

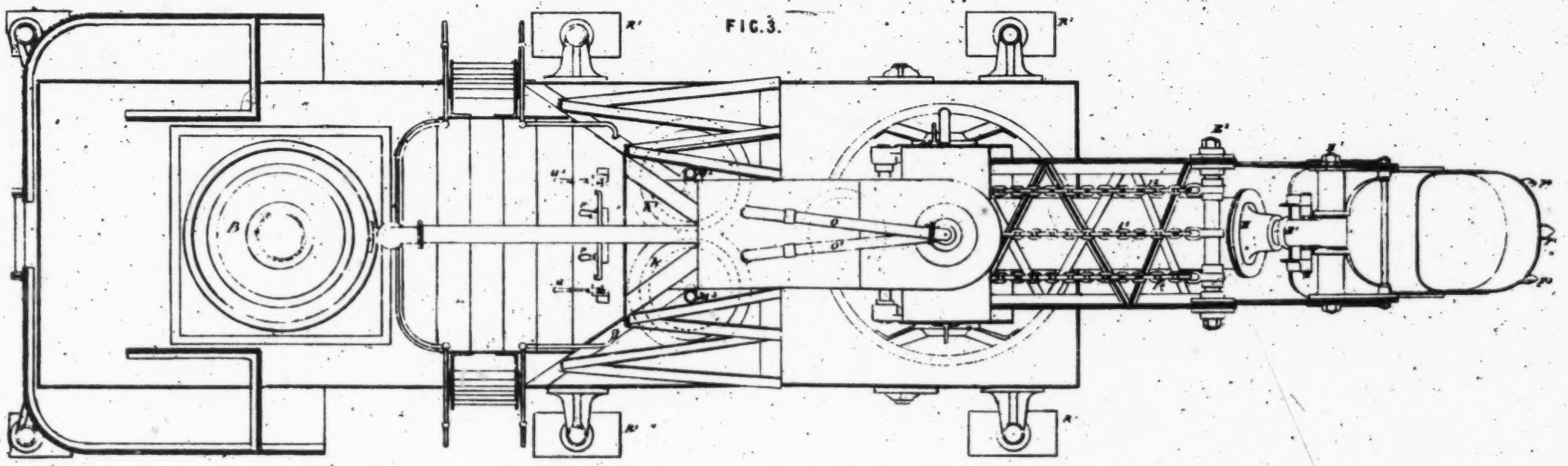

London: Printed by George Edward Eyre and William Spottiswoode
Printers to the Queen's most Excellent Majesty. 1862.

Malby & Sons, Photo-Litho

A.D. 1862. Feb. 10. N° 655.
D'ALTON'S Specification.

(5 SHEETS)
SHEET 4.

FIG. 4.

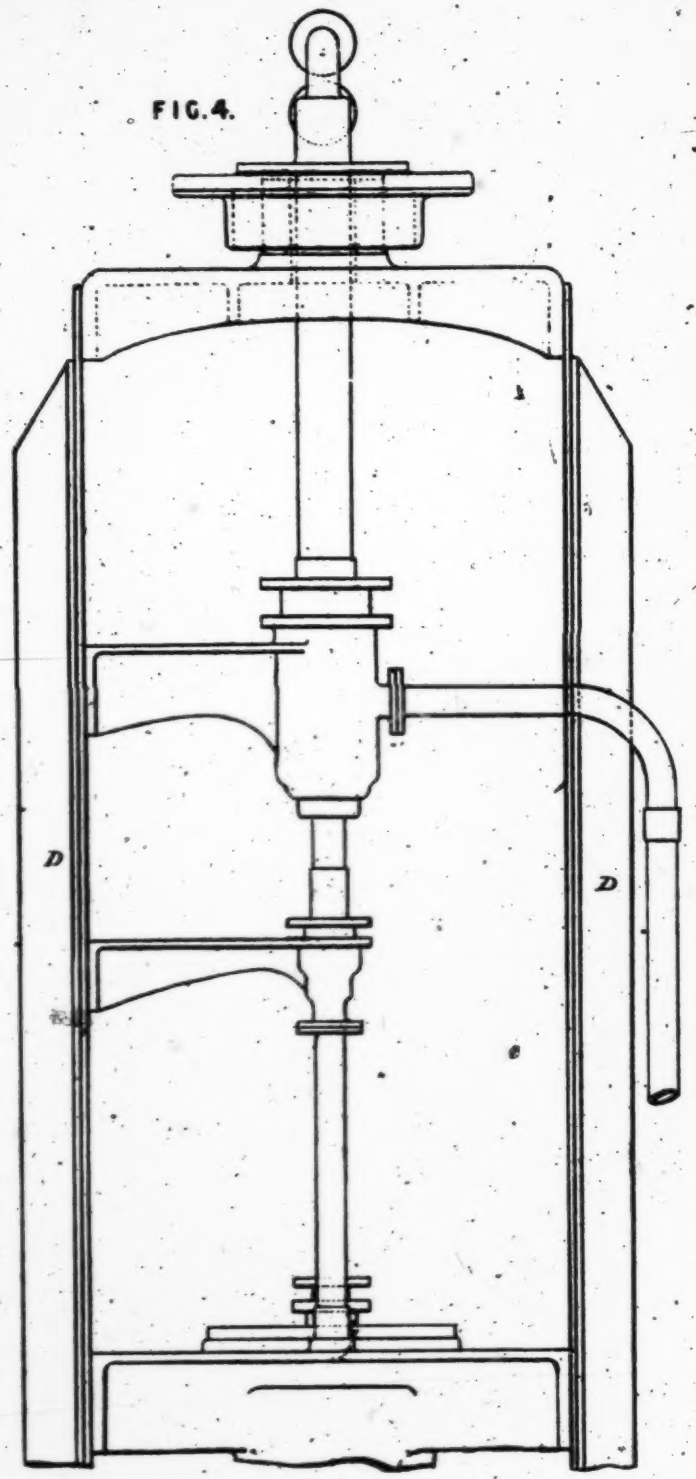

FIG. 7.

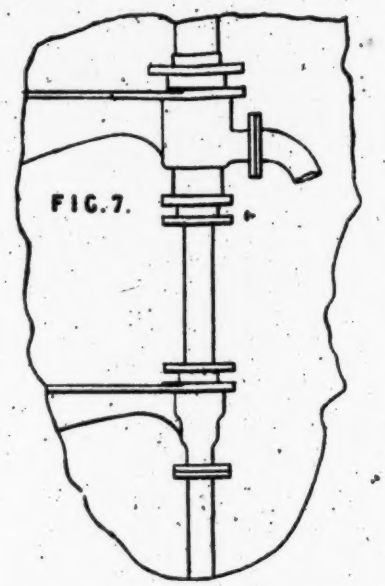

FIG. 8.

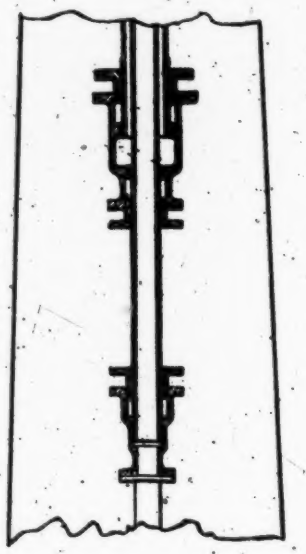

FIG. 5.

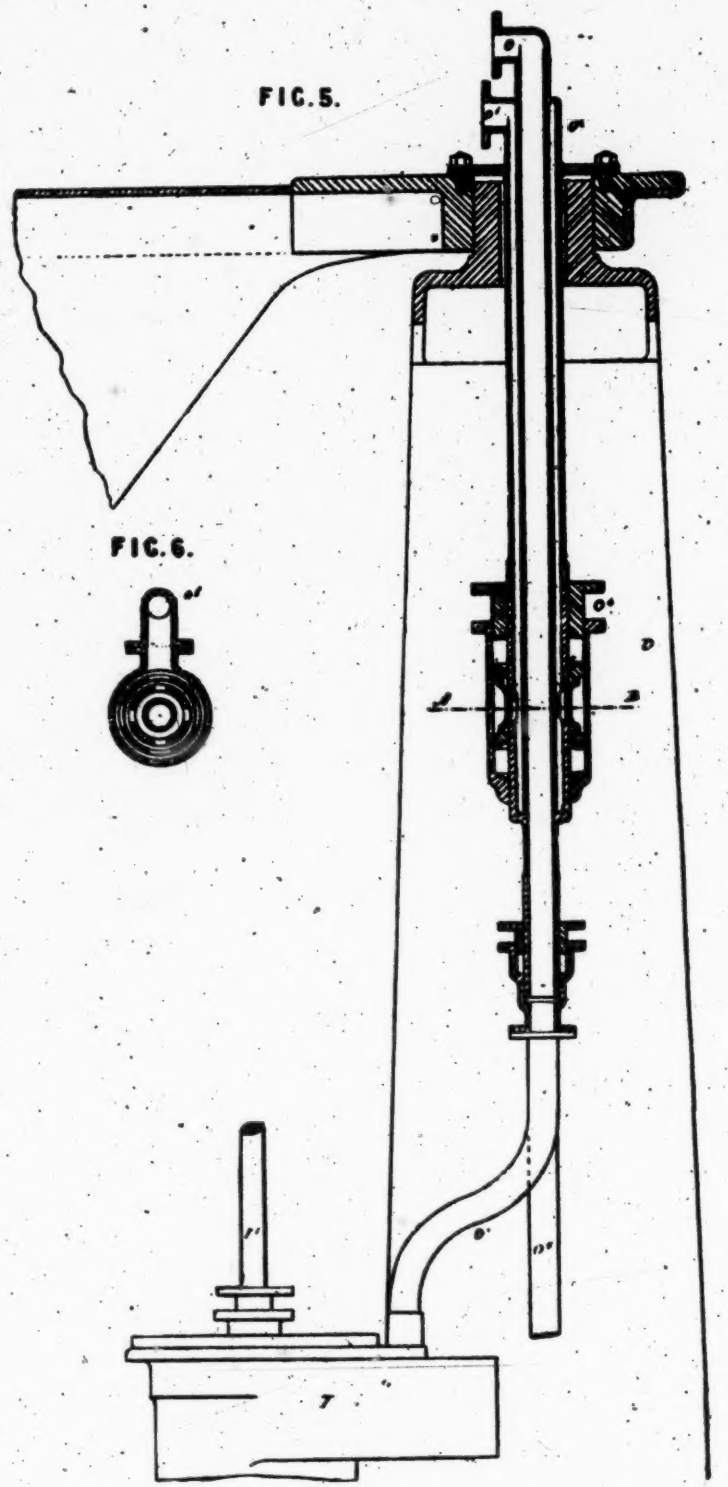

FIG. 6.

FIG. 9.

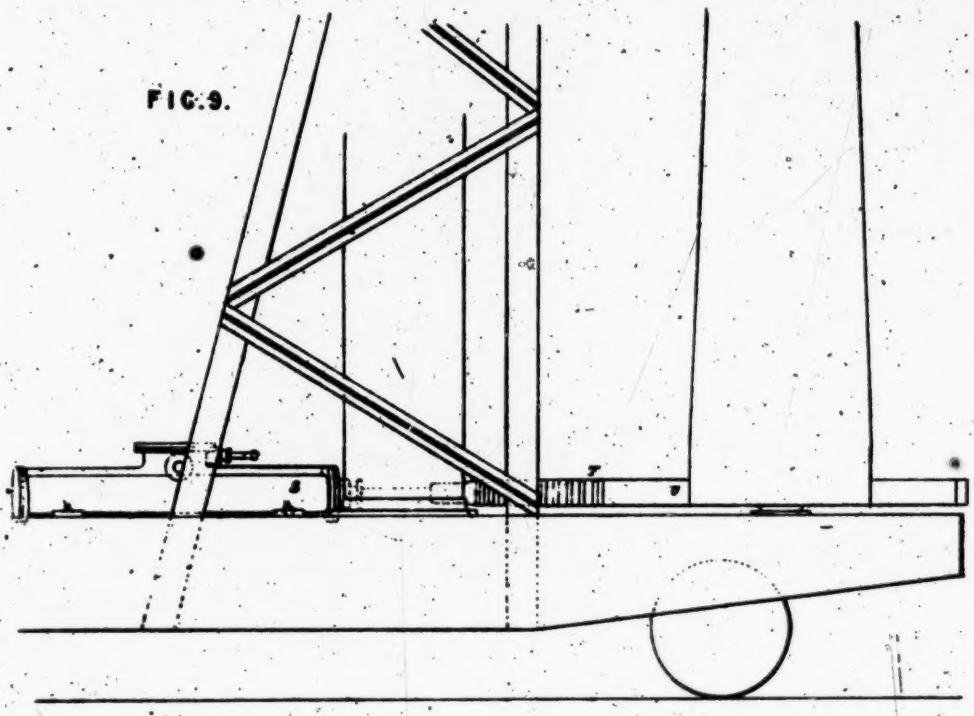

FIG. 10.

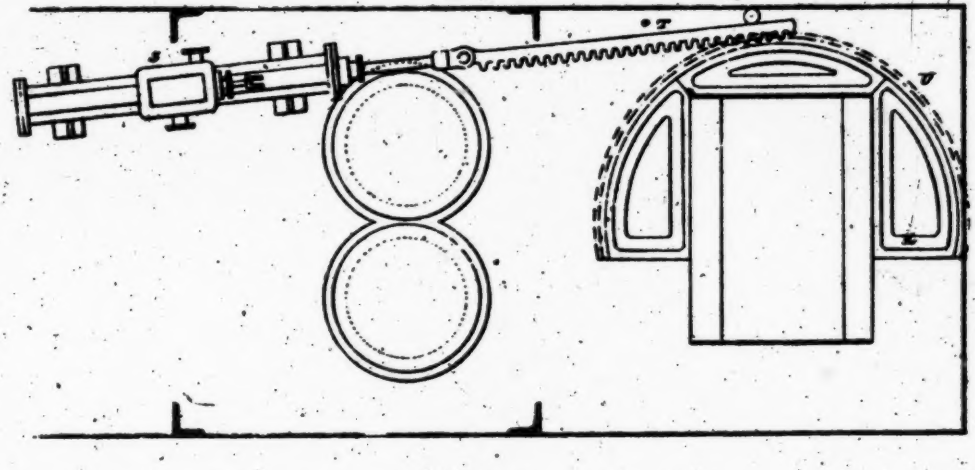

DEFENDANT'S EXHIBIT NO. 62(120)

Book of Patents

(Filed May 16, 1931)

1269

[Cases Nos. 964 and 965]

N° 6266 A.D. 1899

Date of Application, 23rd Mar., 1899—Accepted, 27th May, 1899

JUL 5 1899

COMPLETE SPECIFICATION.

Improvements in Cranes for Dredging or Excavating.

I, HAROLD WILLIAM JOSHUA CHEFFINS, Engineer, of St. Edmonds, The Terrace Greenhithe, in the County of Kent, do hereby declare the nature of this invention and in what manner the same is to be performed, to be particularly described and ascertained in and by the following statement:—

My improvement can be applied to any ordinary jib crane and is as described hereunder.

Attached to the underside of the jib of the crane, and swinging on a pin or hinge, I have a long arm, made in any suitable manner of wood, iron, or other suitable material, and at the outer end of this arm I have attached another long arm, working on a hinge or pin and thus forming an elbow joint. At the end of the second arm is attached the bucket, which is of the ordinary steam navvy type, fitted with teeth for breaking away the chalk, rock, or gravel, or whatever is being dealt with, and having a movable bottom for emptying.

The first arm referred to is pivoted at any suitable distance, say about 10 feet, from the top of the jib of crane. From the elbow formed by the junction of the two arms, I lead a guy rope, or chain, over the head of crane, and to a drum, connected to a crank shaft worked by a cylinder actuated by steam, or water, or in any suitable way. The guy rope is continued down, and round a roller placed at the foot of crane, or in any suitable position on the crane jib, and again to the elbow joint.

The object of this guy rope or chain is to enable the bucket to be pushed into, or drawn away from, the face of the material being worked.

The bucket is hoisted to the top in the ordinary manner, except that the hoisting chain pulley is about half way down, instead of being at the head, of the jib of crane.

I also have a break, either hand or foot, for checking the guy rope or chain and for putting tension on the apparatus when necessary.

Or instead of this method I make my improved crane as follows—At the top end of the jib I have a fixed arm, sloping downwards at a suitable angle, made in any suitable manner of wood, iron, or other material and of a suitable length, and near the bottom end of this arm I have a stay or beam running back horizontally to the jib of crane. At the end of the fixed arm I have a girder or balk of timber, swung vertically, which carries the bucket at its bottom end. This beam or girder runs against rollers at the back, whilst on the front I have a rack, with a corresponding toothed wheel placed at the end of the first arm, a chain wheel and endless chain being also attached, the chain running to the bottom end of the jib and round a chain wheel worked by suitable gearing. By this means the beam or girder which carries the bucket can be raised or lowered as desired. Attached to the bucket there is a pulley block with a chain or rope leading back to the jib, round a roller, and then to a drum worked by steam or water or in any suitable manner, to enable the bucket to be drawn up against the face of the material being worked.

[*Price 8d.*]

Cheffins's Improvements in Cranes for Dredging or Excavating.

The great feature of my improved crane is, that whilst the crane itself can remain on the surface, the material being excavated can be dug out from below the surface, either perpendicularly, or at any desired angle, or to any desired depth, thus doing away with the necessity of pontoons when dredging or excavating in water, or of keeping the crane on a level with its work, as is now necessary, when dealing with dry materials. Another special feature also, is that the bucket or digger is drawn upwards and against the face of its work on the same side as the crane, instead of on the side away from the crane.

The drawings annexed show side elevations of my improved crane, in position for working, of both methods described above for carrying out my invention.

In Fig. 1, A is the crane jib, B the arm pivoted to the jib A, and C the second arm pivoted to arm B, arm C carrying the bucket D. Attached to the bucket is the chain or rope E this rope passing round a roller at B^1 on to a drum F which is worked by a crank shaft connected to a cylinder. A chain or rope G is attached to the knuckle joint C^1 and passes round the roller H on the top of the jib A and then down on to a drum at the foot of crane. The chain or rope G^1 is also attached to the knuckle joint C^1 and passes round a drum I on the crane, the crane standing on the surface of the ground J so that the earth, chalk, or whatever it may be, is drawn up to the surface, the bucket digging towards the crane instead of, as is usually the case, away from it.

Fig. 2 shows the second method as described above of carrying out my invention. At the top end of the jib A, I have a fixed arm B, sloping downwards at a suitable angle, at the bottom end of this arm I have a stay or beam C, running back horizontally and fixed to the jib A, thus holding the first arm B in position. At the end of the arm B, I have a girder or balk of timber D, which works up against the rollers E, E, these rollers being pivoted between two triangular shaped plates R pivoted to the beam B, the girder or timber D passing in between the two triangular plates R. On the front side of the girder or timber D, I have a rack F with a corresponding toothed wheel G, with a chain wheel H, and an endless chain I, running round the chain wheel J. At the end of the girder or timber D there is a bucket or digger K with teeth L. Attached to this bucket K there is a pulley block M a chain or rope N attached to the jib A passing round the pulley M back round the roller O and then to the drum where the power is given out. The crane is on the surface of the ground P and the digger or bucket works up the side Q.

It must be understood that I do not confine myself exactly to the details herein described and shown in the drawings, these can be modified if found desirable, but as already stated the novelty of my invention lies in the arrangement of the bucket pole, which is turned and works towards the crane, and the ability to excavate to any depth below the surface whilst the crane stands on it.

Having now particularly described and ascertained the nature of my said invention, and in what manner the same is to be performed, I declare that what I claim is:—

1. The improved crane for dredging and excavating, substantially as described and shown in drawings.

2. In a crane for dredging or excavating the method substantially as described and shown in drawings, of digging below the surface of the ground or water the crane itself standing on the surface of the ground.

3. An improved crane in which the bucket or digger works below the level of the bottom of the crane and towards the crane substantially as described, and shown in drawings.

4. In a crane for dredging or excavating the method of working the bucket or digger by means of arms connected to the jib of the crane and controlling same by means of ropes or chains substantially as described and shown in drawings.

5. In a crane for dredging or excavating, the use of a girder or timber for carrying the bucket or digger, and the method of working and controlling this girder

12718

or timber so that the bucket or digger is kept up to the face of its work at any angle, and also the method of raising and lowering same substantially as described and shown in drawings.

Dated this 23rd day of March 1899.

H. W. J. CHEFFINS.

Redhill: Printed for Her Majesty's Stationery Office, by Malcomson & Co., Ltd.—1899.

[This Drawing is a reproduction of the Original on a reduced scale.]

2 SHEETS
SHEET 1.

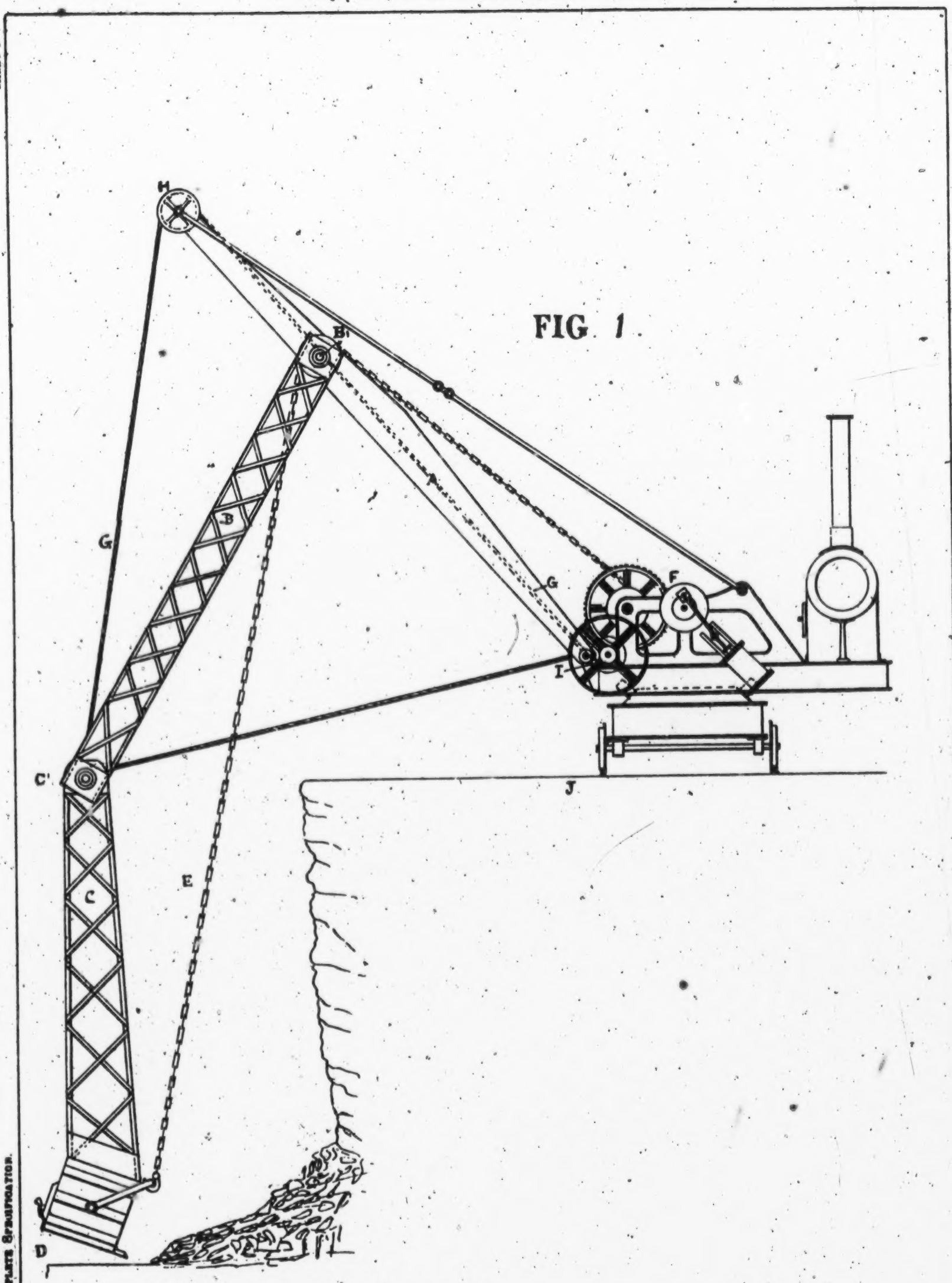

FIG. 1.

A.D. 1898. March 23. N°. 6266.
GRIFFIN'S Complete Specification.

Malby & Sons, Photo-Lith.

[This Drawing is a reproduction of the Original on a reduced scale]

2 SHEETS
SHEET 2

Kelly & Sons Photo-Litho

FIG. 2.

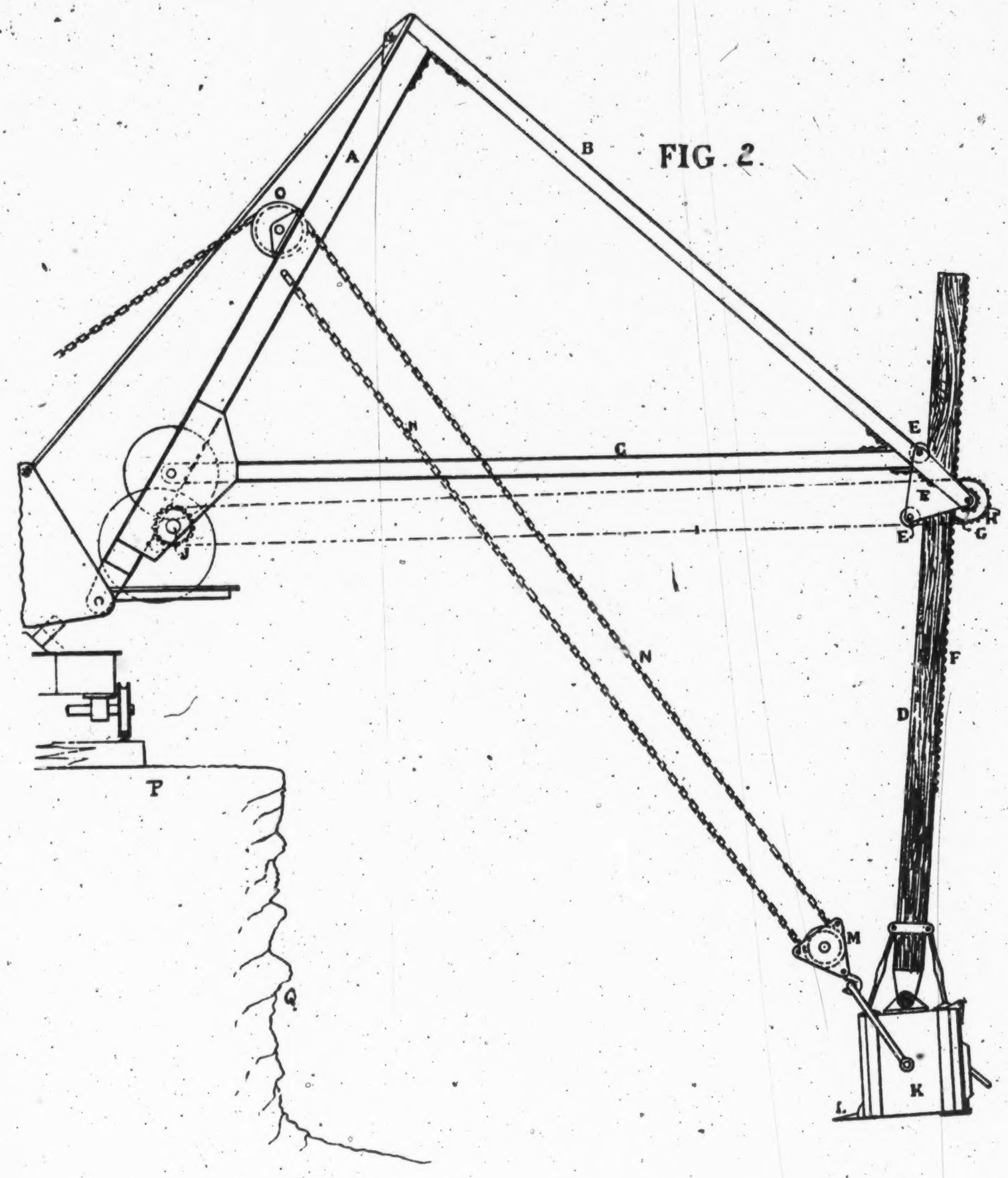

A.D. 1898. March 23. N°. 6366.
GRIFFIN'S Complete Specification.

DEFENDANT'S EXHIBIT NO. 62(121)
Book of Patents.
(Filed May 16, 1931)
[Cases Nos. 964 and 965]

N° 9893 A.D. 1899

Date of Application, 10th May, 1899
Complete Specification Left, 9th Mar., 1900—Accepted, 14th Apr., 1900

LIBRARY
JUN 1 1900 S.
PATENT OFFICE.

PROVISIONAL SPECIFICATION.

Improvements in Apparatus for Excavating.

I, THOMAS WHITAKER, of Horsforth, near Leeds, in the County of York, Contractor, do hereby declare the nature of this invention to be as follows:

This invention relates to improvements in excavating apparatus or what are known as steam crane navvies which are intended to excavate trenches or the like below the ground level upon which the base of the crane rests.

I make the jib of triangular formation or of other suitable shape extending out a considerable distance beyond the pivoted upright member.

At the lower end of the upright member is placed a drum or pulley actuated by suitable gearing either by hand or by power and at the outer end of the jib is pivoted a swinging or oscillating cradle by which the bucket arm is suspended and operated.

The cradle is provided with two drums or pulleys one of which receives a driving rope band or chain from the drum or pulley on the upright member and the other a rope attached at both ends to the bucket arm.

The cradle is also provided with two or more guide rollers between which the bucket arm slides.

The bucket arm and bucket are suspended by a rope attached to the arm at both ends by means of T channel or angle iron stays which are movable or adjustable in position according to the depth of excavation required screws are also provided to take up the slack of the ropes and keep them tight.

The rope that suspends the bucket is passed round the drum and by turning the drum in one direction or the other the bucket is raised or lowered to the desired height. The rope drum is operated by the drum at the other end a rope passing from one to the other.

The excavating is performed by the ordinary crane rope and the arm and bucket may when raised into a horizontal position be drawn backwards and forwards by the suspending rope.

Dated this 6th day of May, 1899.

WM. P. THOMPSON & Co.,
6, Bank Street, Manchester, Patent Agents.

COMPLETE SPECIFICATION.

Improvements in Apparatus for Excavating.

I, THOMAS WHITAKER, of Horsforth, near Leeds, in the County of York, Contractor, do hereby declare the nature of this invention and in what manner the

[*Price 8d.*]

same is to be performed, to be particularly described and ascertained in and by the following statement:—

This invention relates to improvements in excavating apparatus or what are known as steam crane navvies which are intended to excavate trenches or the like below the ground level upon which the base of the crane rests.

The invention will be fully described with reference to the accompanying drawings.

Fig. 1. Side elevation.
Fig. 2. Plan.
Fig. 3. Side elevation showing the bucket in a different position.
Fig. 4. Side elevation of detail enlarged.
Fig. 5. Plan of same.

The jib A is of triangular lattice work formation supported by and extending out a considerable distance from the upright pivoted member B.

To the upright member B is fitted a winch or crab C with drum *c* actuated by suitable gearing either by hand or power and at the outer end of the jib A is pivoted an oscillating cradle D in which the bucket arm E is suspended and in which it is free to move or slide longitudinally. The cradle D is provided with two or more guide rollers *c* between which the bucket arm slides.

At the outer end of the jib A I attach a drum or winch F actuated by the rope or chain pulleys G and H. The pulleys G and H are driven by ropes or chains K from the winch or crab C on the upright member B the ropes being so attached or arranged that the pulleys may be rotated in either direction.

A rope or chain L or two such ropes or chains are attached to the drum F in such a way that when the drum is rotated one end of the rope or chain is wound up and then unwound. The free ends of the rope or chain L are attached to the opposite ends of the bucket arm E to the cross stays M which may be of T angle or other cross section. The cross stays M may be adjustable in position if desired. The rope or chain is attached by means of screws *m* by which the slack can be taken up and the rope or chain kept tight.

In operation the drum F is turned in one direction or the other by means of the winch C the ropes or chains K on the pulleys G and H and the bucket N is by the rope or chain L raised or lowered to the desired height.

The excavating is performed by the crane rope O attached to the bucket N and operated by the winch P.

Having now particularly described and ascertained the nature of the said invention and in what manner the same is to be performed I declare that what I claim is:—

Excavating apparatus particularly applicable for excavating trenches having the several parts constructed and arranged in combination substantially as described.

Dated this 8th day of March 1900.

WM. P. THOMPSON & Co.,
Manchester, Liverpool and London,
Patent Agents.

Redhill: Printed for Her Majesty's Stationery Office, by Malcomson & Co., Ltd.—1900.

A.D. 1899. May 10. N° 9893.
WHITAKER'S Complete Specification.

3 SHEETS]
SHEET 1.

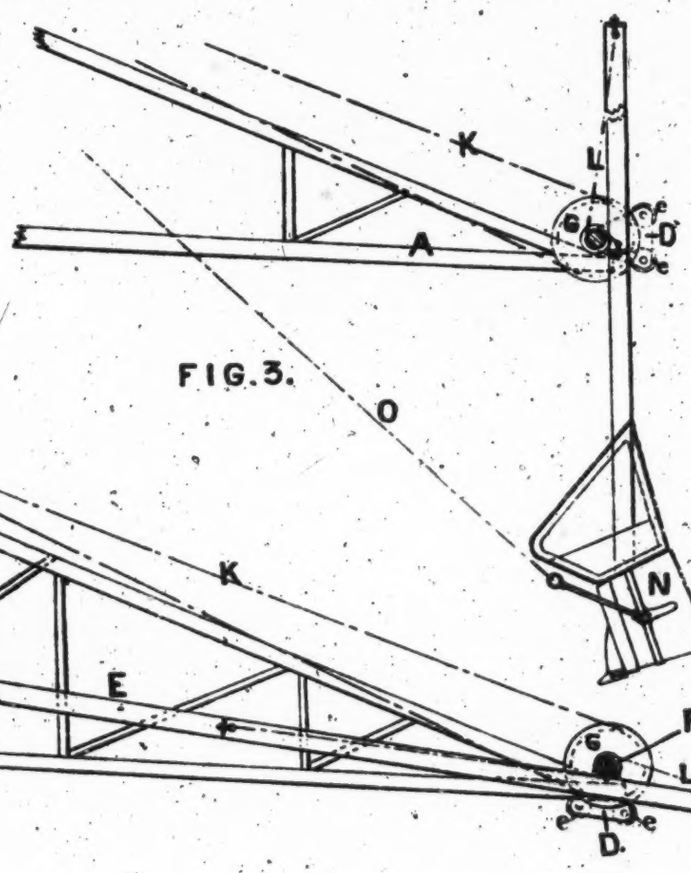

FIG. 3.

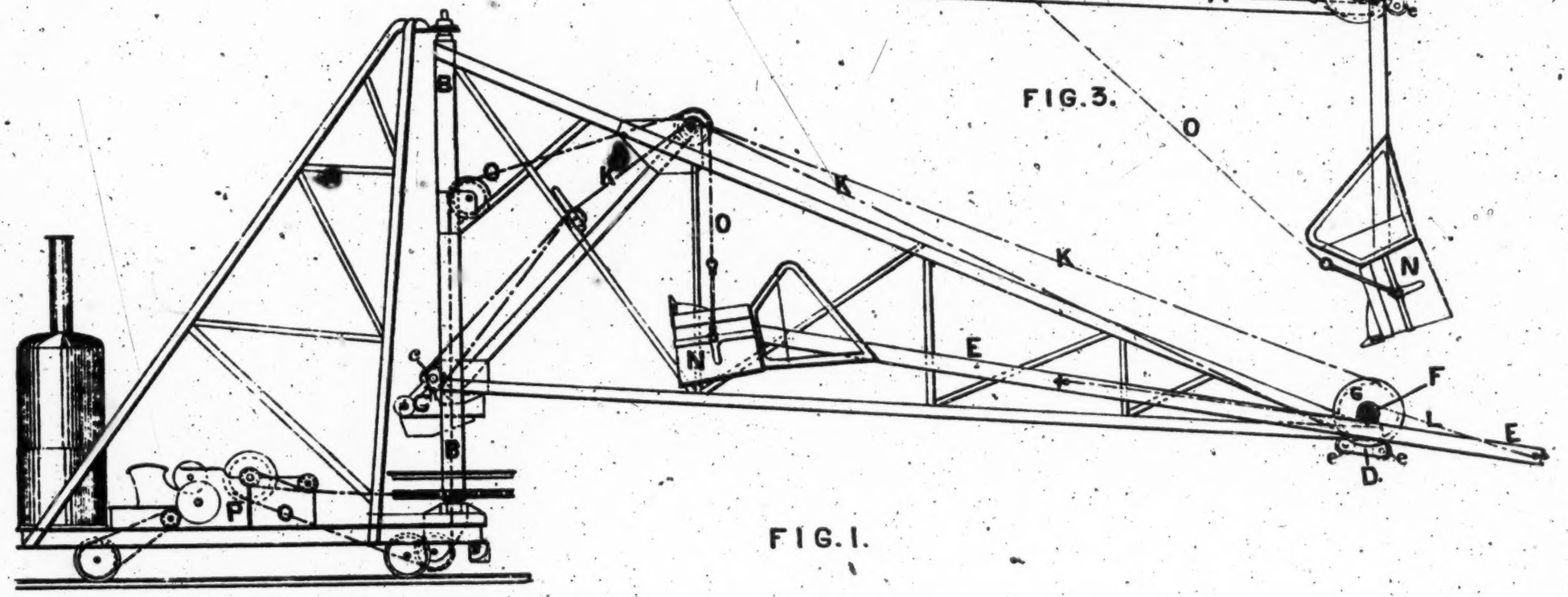

FIG. 1.

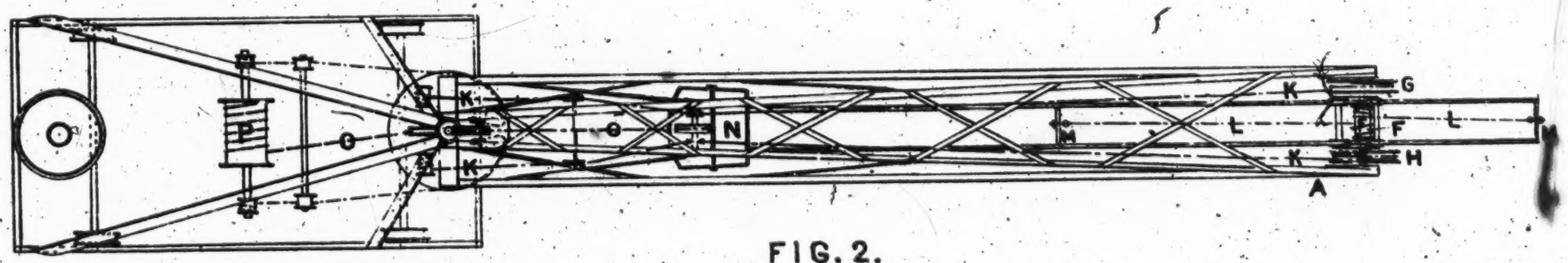

FIG. 2.

[This Drawing is a reproduction of the Original on a reduced scale.]

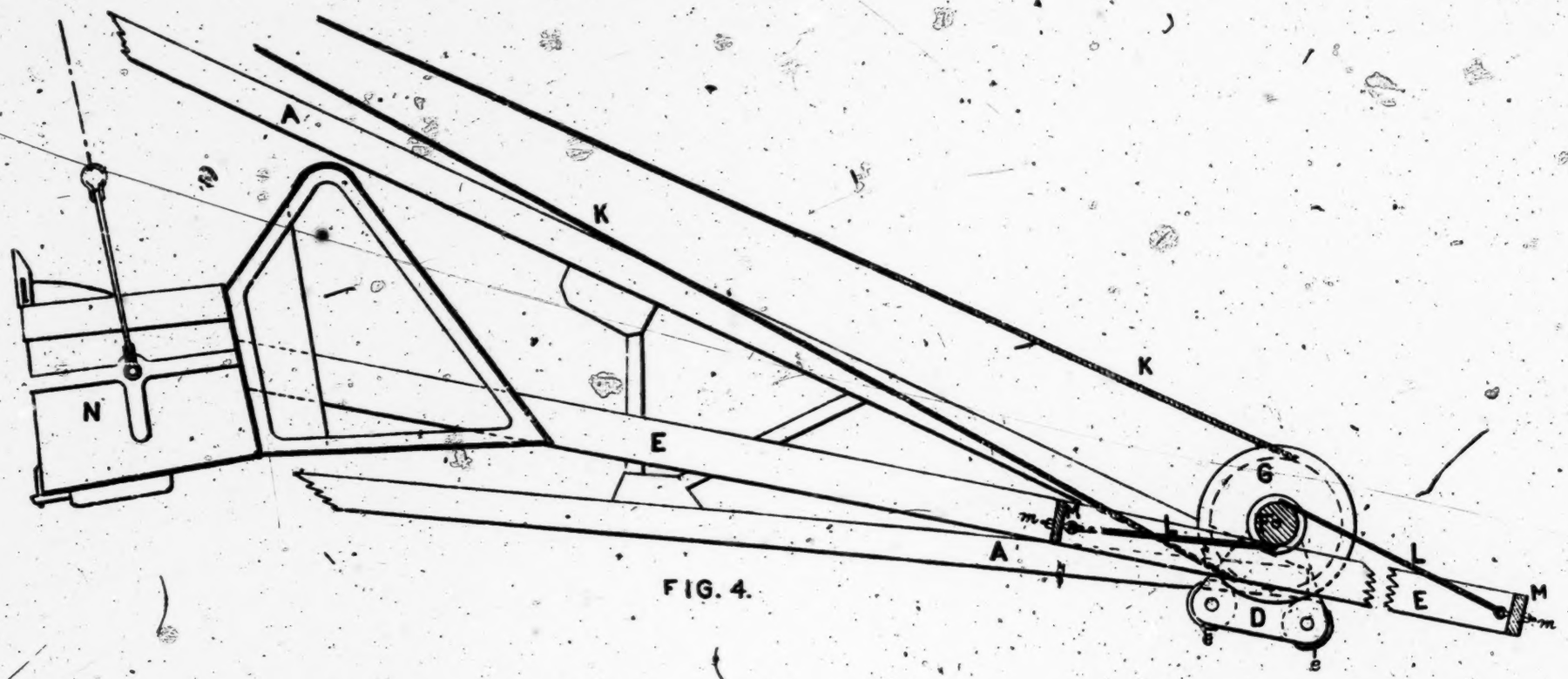

FIG. 4.

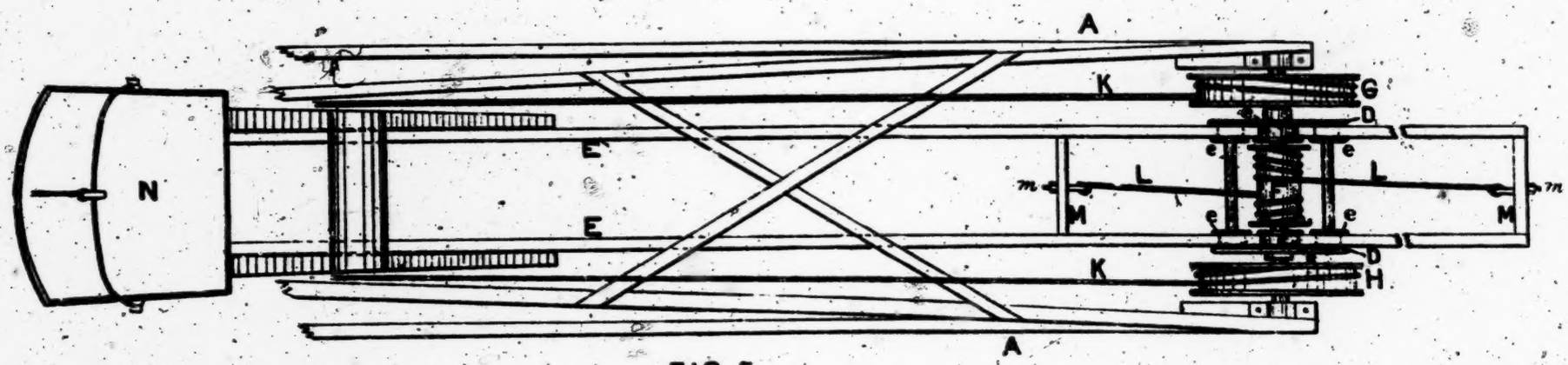

FIG. 5.

This Drawing is a reproduction of the Original on a reduced scale.

DEFENDANT'S EXHIBIT NO. 62(122)
Book of Patents
(Filed May 16, 1931)

N° 11,496 A.D. 1903

Date of Application, 20th May, 1903
Complete Specification Left, 15th Feb., 1904—Accepted, 31st Mar., 1904

LIBRARY
MAR 10 1904
PATENT OFFICE

PROVISIONAL SPECIFICATION.

"Improvements in and connected with Steam Excavators."

I HARRY JUBB of Wood Cottage Anchor Pit. Rastrick, in the County of York. Fitter. do hereby declare the nature of this invention to be as follows:—

The object of my invention is by an improved construction of steam excavators to cut trenches any suitable depth below the foundation or level of the track upon which the excavator is at work, yet at the same time always keep the navvy or excavator upon a solid foundation.

I prefer to construct the jib of the excavator at right angles to the vertical pillar or tower, and of a suitable length. Bolted to the jib upon each side are preferably two plates or brackets connected by and supporting a stud or shaft carrying pinion wheels, these pinions gear with the racks upon the bucket arm carrying the bucket. A bent bracket bolted to each of the aforesaid brackets, carries antifriction rollers which bear against the back of the bucket arm and keep the racks in gear with the pinions.

The bucket arm is so mounted that upon being put in operation it moves towards the excavator, excavating the trench and loading the bucket, as it continues its movement by the action of the winding mechanism the bucket arm assumes a horizontal position when the jib may be moved so as to deposit the contents of the bucket either upon the side of the trench or into a truck as desired.

In order to lock the bucket arm and regulate the amount of excavation by the bucket, I preferably employ a gear wheel upon the pinion shaft., this gears with a second or intermediate gear wheel gearing with a small pinion upon a shaft carried by the jib. Also upon this shaft is a bevel wheel connected with further bevel wheels upon longitudinal and vertical shafts, to a brake wheel and treadle lever operated by the wheel man, In this manner the pinions gearing with the bucket arm racks can be released at will according to the action of the bucket.

By my improvements other work incidental to trenching and the like can be simultaneously proceeded with, with better facility than hitherto.

Dated this Seventeenth day of May 1903

JOHN E. WALSH,
Waterhouse Chambers Crossley Street. Halifax.
Patent Agent for the Applicant

COMPLETE SPECIFICATION.

Improvements in and connected with Steam Excavators.

I, HARRY JUBB of Wood Cottage Anchor Pit Rastrick in the County of York. Fitter do hereby declare the nature of this invention, and in what manner

the same is to be performed, to be particularly described and ascertained in and by the following statement:—

The object of my invention is the construction of an improved steam excavator, by the combination of same with ordinary steam travelling cranes; such excavator to cut trenches any suitable depth below the foundation or level of the track upon which the excavator is at work, yet at the same time always keep the trenching navvy or excavator upon a solid foundation and in advance of the head of the trench being cut.

Further, by the combination and use of my improved excavator in connection with the ordinary travelling crane, the contents of the bucket after being raised above the top of the trench, may be deposited upon either side of the track, or, (in the event of the crane being on uneven ground) at the rear of the crane so as to level up or facilitate the laying of the permanent way or track of the travelling crane. Or the contents may be emptied direct into trucks as desired.

DESCRIPTION OF DRAWINGS

Fig 1 is a side elevation showing my improved trenching excavator attached to and working in connection with, an ordinary steam travelling crane:—

Fig 2 is an end view of Fig 1

Fig 3 is a plan of jib, bucket arm, and mechanism for operating bucket arm in connection with my improved trenching excavator

I prefer to construct my improved trenching excavator so as to be readily fixed to an ordinary travelling steam crane, with the jib A of said excavator supported at right angles to a vertical pillar or tower B of the crane C and of a suitable length. Bolted, rivetted, or otherwise attached to the jib A upon each side, are prefably two plates or brackets D D, and bolted to these brackets are suitable bearings E supporting a stud or shaft F upon which are mounted pinion wheels G G; these pinions gear with racks H H attached to bucket arm J carrying the bucket K. An arm L hingeing upon the stud or shaft F, carries antifriction rollers M M, which revolve upon a stud or spindle N and bear against the back of the bucket arm J in order to keep the racks H H in gear with the pinions G G.

In order to lock the bucket arm J or regulate the amount of bite or excavation by the bucket K, I preferably employ a gear wheel P upon the pinion shaft F, this gears with a second or intermediate gear wheel R gearing with a small pinion S upon a shaft T carried by the jib A. Also upon this shaft T at one end, is a bevel wheel U, gearing with a similar wheel V upon a horizontal shaft W supported in suitable bearings attached to the side of the jib A; at the other end of this horizontal shaft W is a further bevel wheel X, gearing with a similar wheel Y upon a vertical shaft Z, and this shaft is geared in a similar manner with the brake wheel shaft 1. The brake shaft 1 is acted upon in order to control its movement, by the usual strap 2, brake pulley 3, and treadle 4 in the ordinary way. 2^A is the hand wheel for assisting or facilitating the movement of the bucket arm independant of or in addition to the winding mechanism.

The bucket arm J is so mounted that upon being operated, the bucket moves towards the excavator crane C, excavating the trench 5 and loading itself as it continues its movement; this operation of the bucket and bucket arm is effected by chain 6 attached to a bracket 7 bolted to the jib, such chain passing under a pulley 8 upon upon the bucket bridle or bale 9, and over pulley 10 also supported upon the jib A, and from thence to the crane winch 11; the bite of the bucket upon the face 12 of the trench being regulated by the amount of brake put upon the bucket arm J by the treadle 4 or brake pulley 3 aforesaid

As the bucket arm is raised, it gradually assumes a horisontal position (see dotted lines at Fig 1, the jib A may then be moved in any direction with

the crane C upon the circular roller carriage 13, and the contents deposited where required; the back of the bucket being opened for this purpose when desired by the usual hinged door 14, actuated by lever 15, and chain or rope 16 in the ordinary way. The position or angle of the bucket upon the bucket arm J being adjusted and fixed by the slots 17 and bolts 18 as desired.

The action is as follows:—As the winch commences to revolve and take up the rope or chain 6, the bucket K bites against or cuts into the head 12 of the trench, the continued winding in of the rope or chain 6 gives a radial and ascending movement to the bucket arm J and bucket K, causing the racks H to actuate the pinions G and mechanism connected with the brake wheel shaft 1 and treadle 4, Should the rotation of the pinions G G be impeded by the brake mechanism aforesaid, the outward movement of the bucket arm J is checked, so causing the bucket K to cut or bite deeper into the head of the trench. When the bucket with it's load has been raised into the position clear of the trench as shown in dotted lines at Fig 1, the jib A and crane C are moved in the desired direction for unloading same; the bucket is unloaded or emptied by pulling the rope 16 actuating lever 15 and door 14; immediately the contents have been discharged the jib is swung back, and as the rope 6 is let off, the bucket descends and the bucket arm assumes its customary position for the next operation.

By the general arrangement of the braking mechanism herein employed, the space between the end of the jib and the vertical pillar is clear, so that the bucket and bucket arm are not impeded or limited in their action. Also this arrangement of brake gear may be applied to ordinary steam navvys or excavators, and would be far safer and more effective and durable than the means hitherto employed. Further by my improvements other work incidental to trenching may be proceeded with simultaneously or in connection with above, with better facility than hitherto.

Having now particularly described and ascertained the nature of my said invention, and in what manner the same is to be performed, I declare that what I claim is:—

1. An excavator for cutting trenches and for similar purposes characterised by a jib A mounted upon a vertical pillar attached to a steam travelling crane, said jib supporting the bucket arm J carrying bucket K and operating, and regulating or controlling the action of said bucket arm and bucket, in the manner and for the purposes substantially as set forth.

2. In excavators for cutting trenches and for other similar or suitable purposes controlling and regulating the cut or bite of the bucket by means of suitable gearing and shafts supported by the jib A and pillar B, said mechanism being connected with and controlled by the ordinary brake shaft 1, brake pulley and treadle, in the manner and for the purpose set forth.

Dated this Twelfth day of February 1904

JOHN E. WALSH,
Waterhouse Chambers, Crossley Street, Halifax
Patent Agent for the Applicant

Redhill: Printed for His Majesty's Stationery Office, by Love & Malcomson, Ltd.—1904.

A.D. 1903. May 20. N° 11,498.
COBB'S COMPLETE SPECIFICATION.

2 SHEETS
SHEET 1.

FIG. 1.

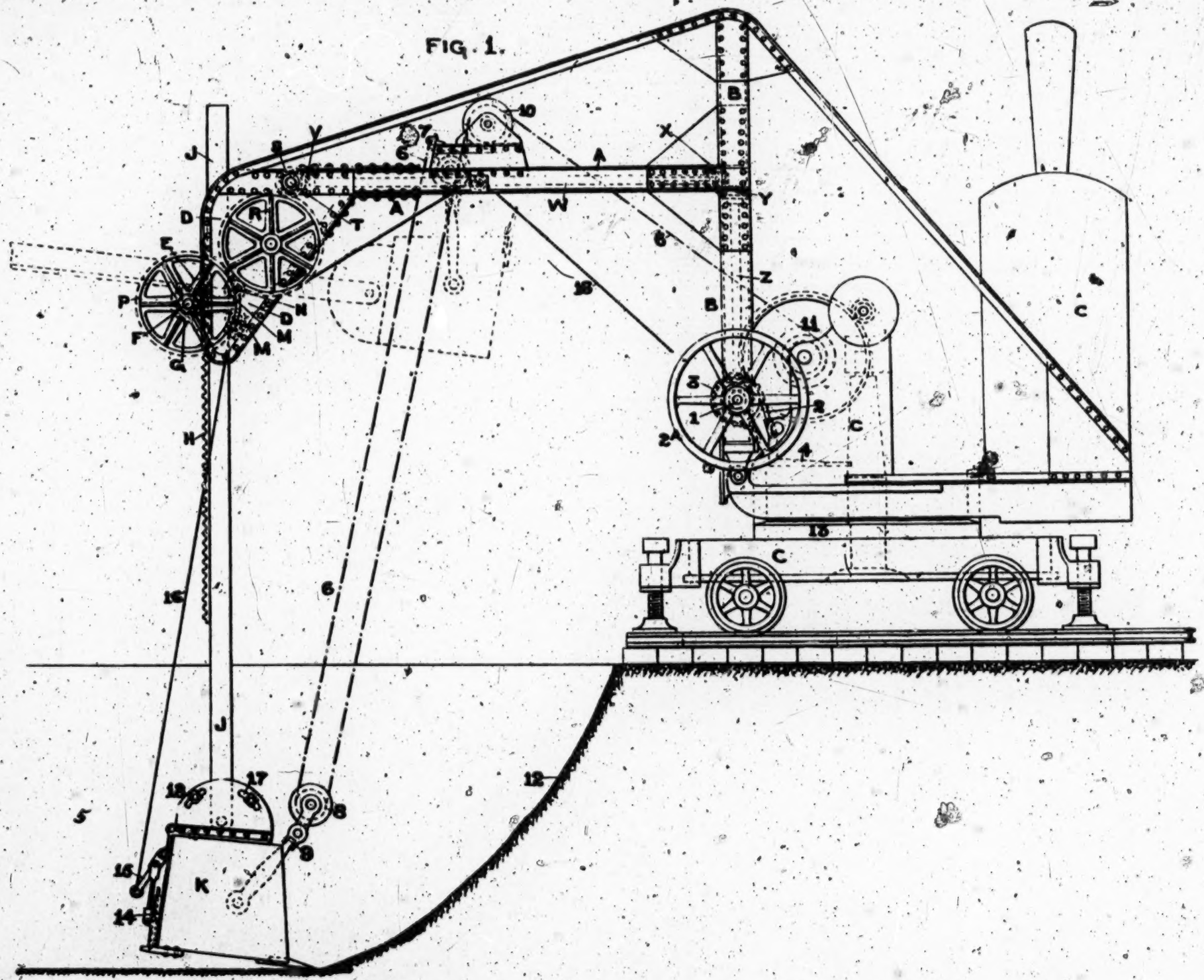

[This Drawing is a reproduction of the Original on a reduced scale.

FIG. 2.

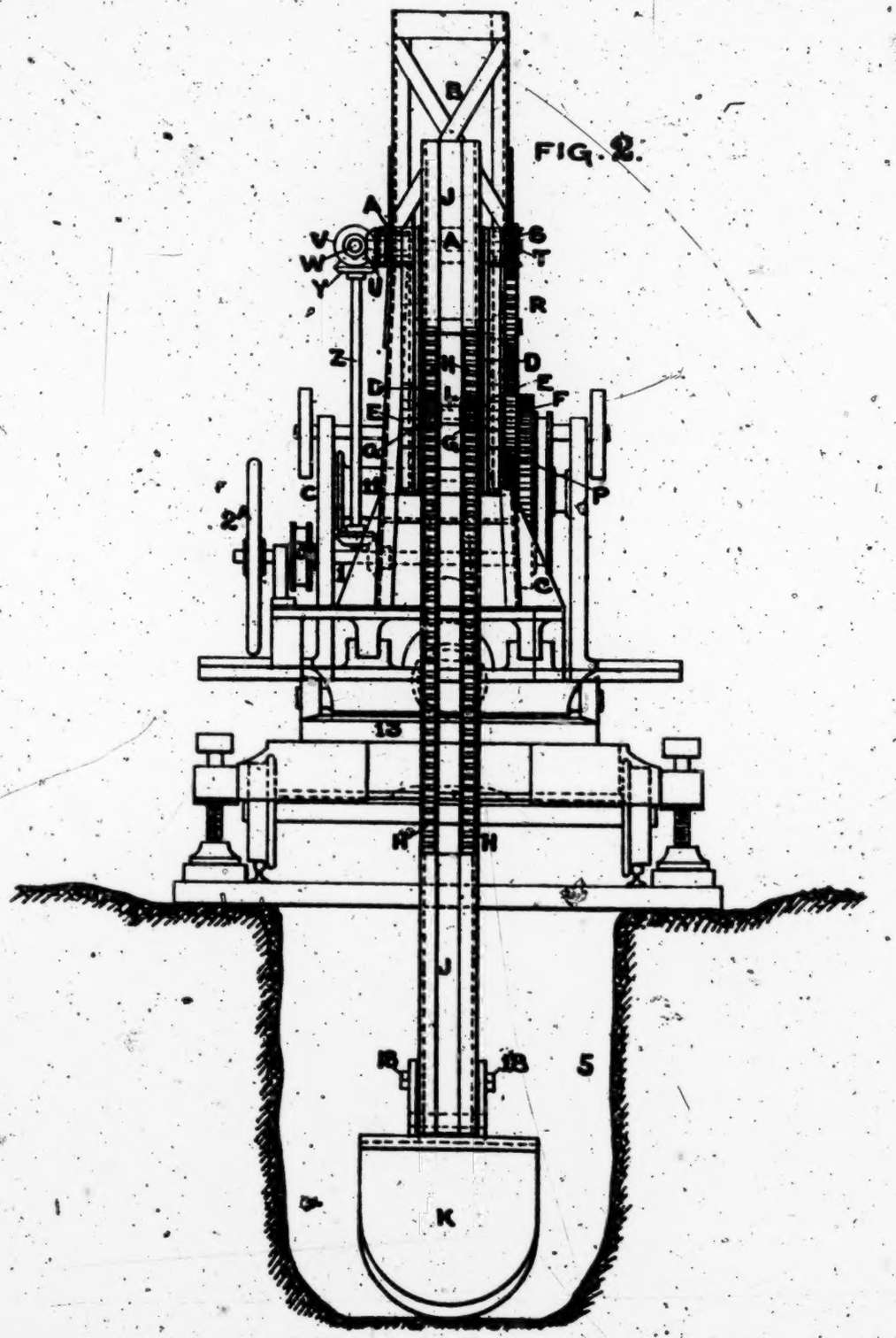

FIG. 3.

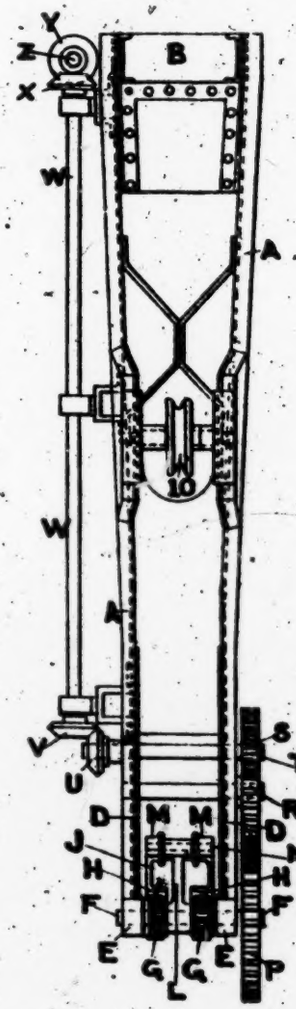

[This Drawing is a reproduction of the Original on a reduced scale.]

DEFENDANT'S EXHIBIT NO. 95.

Keystone Driller Co. Letter to B. R. Clutter, dated Feb. 11, 1925.

(Filed May 16, 1931.)

[Cases Nos. 964 and 965]

Feb. 11, 1925.

B. R. Clutter,
Edgewood Court,
Lakewood, N. J.

Dear Sir:—

We are just now in receipt of letter from Rex Downie in which he states that he has not definitely decided on the special considerations and the exact details, but he states that if you want to place your order for the shovel before he can reach final conclusion that we are to take your order on basis of initial cash payment of $500.00, maximum time of 18 months for the balance.

If this is what you understood by it, and are ready to close the deal, you can either come into the office or telephone us and we will arrange to send some one down to fix the contract with you.

Yours very truly,

R/S KEYSTONE DRILLER COMPANY.

DEFENDANT'S EXHIBIT NO. 97.

Invoice for Excavator, from Keystone Driller Co. to Clutter Contracting Co., dated March 9, 1925.

(Filed May 16, 1931.)

[Cases Nos. 964 and 965]

PRINTER'S NOTE:

This Exhibit, being identical with Sheet 2 of Defendant's Exhibit No. 37, has been omitted to avoid duplication. (See Page 240 of Exhibits, Vol. III.)

DEFENDANT'S EXHIBIT NO. 98.

Agreement, dated April 11, 1925, between Burn R. Clutter and the Keystone Driller Co.

(Filed May 16, 1931.)

[Cases Nos. 964 and 965]

MEMORANDUM.

This is to witness agreement made this day between the undersigned parties, Burn R. Clutter and the Keystone Driller Co.

1. Burn R. Clutter, for the consideration named below, hereby conveys, to the Keystone Driller Co. all right, title or interest that he may now have or may later acquire, as inventor or co-inventor, in that certain pivoted bottom ditcher scoop contrived by himself, or by him and Herbert Wallower, and which was built at a shop in Pittsburg, Kansas and tried out on one or more Keystone excavators at Joplin, Mo., during the period of November and December 1919 and January, February and March 1920.

2. In consideration of the above the Keystone Driller Co. hereby conveys to Burn R. Clutter a one-fourth ownership in that certain Keystone Excavator with equipment as furnished to him under contract-lease dated Feb. 28th, 1925.

3. In further consideration of above the Keystone Driller Co. hereby agrees, subject to the time-limit contained in fourth paragraph hereof, to convey to Burn R. Clutter a like additional one-fourth interest in said excavator and equipment, in the event and upon the occurrence of any one of the following three contingencies, namely, (1) if and when U. S. patent No. 1,511,114, issued Oct. 7, 1924 for "improvement in EXCAVATING MACHINES" shall have been declared by any U. S. district court, valid in claim as worded in Claim No. Six as issued; or (2) if and when any of the claims of the said patent No. 1,511,114 shall have been declared by any competent court, valid to the extent of securing to the owner of said patent the sole right to make and sell a machine-ward moving ditcher scoop having a pivoted bottom; or (3) if and when, due to action based upon the said patent No. 1,511,114, or any other patent owned by the Keystone Driller Co., or due to any threatened action by the Keystone Driller Co. the said Company shall have enjoyed for an uninterrupted period of one year the sole

manufacture and sale, in the United States, of a machine-ward moving ditcher scoop having a pivoted bottom.

4. It is agreed that the payment of one-fourth of the price of the machine and equipment named in second paragraph shall be suspended only until two years from date hereof, in anticipation of the possible occurrence of one of the contingencies named in the third paragraph, and that if at that time none of the contingencies named shall have occurred then the third paragraph hereof shall definitely lapse and the suspended one-fourth part of the price shall at once become due and payable in money.

Signed at ..... this .... day of ..... 1925.

.....

.....

Witnesses of both signatures:

.....

.....

DEFENDANT'S EXHIBIT NO. 99.

Acknowledgment by Keystone Driller Co. of Remittance from Clutter Contracting Co., dated April 14, 1925, for $500.00.

(Filed May 16, 1931.)

[Cases Nos. 964 and 965]

KEYSTONE DRILLER COMPANY
Beaver Falls, Pa.
New York, N. Y.

New York, Date April 14, 1925

We acknowledge receipt of	Amt. Rec'd $500.00
your remittance as follows:	Discount $.....
By Ck. # 381.	Interest $.....
To apply on Excavator as billed March 9, 1925.	Total Cr. $500.00

To Clutter Contr. Co.,
Edgewood Court,
Lakewood, N. J.

DEFENDANT'S EXHIBIT NO. 100.

Acknowledgment by Keystone Driller Co. of Remittance from Clutter Contracting Co., dated May 23, 1925, for $517.58.

(Filed May 16, 1931.)

[Cases Nos. 964 and 965]

KEYSTONE DRILLER COMPANY
Beaver Falls, Pa.
New York, N. Y.

New York, Date May 23, 1925

We acknowledge receipt of
your remittance as follows:
By Ck. # 367.

Cash payment, applying on Excavator as billed March 9, 1925. Balance of settlement in the shape of 17 promissory notes, each at $425.00, all dated April 14, 1925, secured by chattel mortgage.

Amt. Rec'd $517.58
Discount $.....
Interest $2.58
Total Cr. $515.00

To Clutter Contr. Co.,
Edgewood Court,
Lakewood, N. J.

DEFENDANT'S EXHIBIT NO. 102.

Keystone Driller Co. Letter, dated March 16, 1926, to B. R. Clutter, and Bank Notice.

(Filed May 16, 1931.)

[Cases Nos. 964 and 965]

March 16, 1926.

Mr. B. R. Clutter
Edgewood Court
Lakewood, N. J.

Dear Sir:

The Peoples National Bank have returned to us unpaid your note dated April 14th at eleven months for

$425 and interest; with the statement that you are remitting direct. The interest on the note amounts to $23.38, so, kindly let us have your check for $448.38.

How did you get along with Rex when you were over at the factory about three weeks ago? We have not as yet heard from them.

Yours very truly,

KEYSTONE DRILLER COMPANY,
By:

FWR:T *Credit Manager.*

THE PEOPLES NATIONAL BANK,
Lakewood, N. J.

Received for Collection from Keystone Driller Co.
Date Received 3/8 Your Reference No. or Date.....

Payer	Date	Time Due	Amount	Pro.	Payee
B. R. Clutter	Attached	3/14	425.—	X	Above

Less exchange $.....

We report on above collection as per item checked (√)

—— We credit your account
√ We enclose check
—— We return Unpaid for reason checked below

√ Party will remit direct

No. 8099

DEFENDANT'S EXHIBIT NO. 103.

Keystone Driller Co. Letter, dated Jan. 15, 1927, to B. R. Clutter.

(Filed May 16, 1931.)

[Cases Nos. 964 and 965]

Jan. 15, 1927.

Mr. B. R. Clutter
Edgewood Court
Lakewood, N. J.

Dear Sir:

In acconection with the arrangement about credit on the first machine purchased from us in connection with the patent litigation, would say that we have re-

ceived from Beaver Falls information that they have canceled four of your notes due respectively in September, October, November and December of 1925, the amount in all being $1700. We are now handing you these notes herewith properly canceled.

It is the writer's understanding that, in case of the successful issue of our, litigation, there will be a further credit. This, of course, cannot be given until the cases have been decided.

Yours very truly,

KEYSTONE DRILLER COMPANY

By:

Credit Manager.

FWR:T
C/C. T. Smith

1303

1303

Little Mus

Marked for identification
Plaintiff's Exhibit 6
In Equity 964 + 965

Plaintiff's ex
Helen R Gr E

S. R. CLUTTER, PRES.
J. W. MATTHEWS, SECTY. & TREAS.

TELEPHONE, LAKEWOOD 701
TELEGRAPH CONNECTIONS, LAKEWOOD, N. J.

CLUTTER CONTRACTING CO.

GENERAL CONTRACTORS

LAKEWOOD, N. J.

NOTARY PUBLIC OF NEW JERSEY
My Commission expires May 7, 1935
964-965
Defendant's Exhibit
No. 104

1904.00 contingent
~~Offer 600.00~~
~~[illegible]~~

Jan 9 - 28

attention ~~Keystone Drilling Co~~

Mr Rex Downey

Dear friend Rex as I have not heard from you for some time and I am in dire need of funds and I am sure that you are the one that can help me out as you remember that you said if you had to take Silona machine you would allow me half the amount that was to be allowed on the first machine and never will the same amount of money be of more benefit to me than right now for I am out of work

Thirgau

This may refer to understanding that "if K.W. should re-possess both machines, and hence could not fulfill Par 2 of contract by a machine-credit, they would reduce the amount of Par 2 by ½ and pay (if and when due) in cash. At least this was writer's intention and recollection of a precinct (verbal) in regard to the point.

R.W. Dec 3rd 1928.

1307

1307

B. R. CLUTTER, PRES.
J. W. MATTHEWS, SECTY. & TREAS.

TELEPHONE, LAKEWOOD 791
TELEGRAPH CONNECTIONS, LAKEWOOD, N. J.

"THE EARTH MOVES AT OUR COMMAND"
BECAUSE WE USE P. & H. GASOLINE SHOVELS

MAY 16 1931

CLUTTER CONTRACTING CO.

GENERAL CONTRACTORS

LAKEWOOD, N. J.

- and out of funds a heck of a predicament but cold facts just the same it seems that every way that I turn my efforts are in vain.

Please let me hear from you by return mail Rex for I never needed help any worse than I do now.

Wishing you a Happy and Prosperous New year

I am Yours Truly

B R Clutter

DEFENDANT'S EXHIBIT NO. 105.

Keystone Driller Co. Letter, dated January 18, 1928, to B. R. Clutter.

(Filed May 16, 1931.)

[Cases Nos. 964 and 965]

January 18, 1928.

Mr. B. R. Clutter,
Lakewood, N. J.

Dear Burn:

We have your letter of January 9th, and we are very glad to hear from you, although we do not know that there is anything we can do about the matter of your shortage of funds.

Perhaps writer's memory is not good but he does not remember about saying that "if we had to take the second machine we would then or for that reason allow half the amount that was to be allowed on the first machine." We have not forgotten the contract we made with you, and as you know we have been extending the time within which the contingency may occur which would render the second installment or portion of the purchase price of your first machine due.

Of course the taking back of the first machine was not contemplated at the time of making our deal, and we feel that the second installment if and when it may become due you, since it would now be payable in cash instead of credit should be at least reduced by whatever loss we had on your first machine. Writer is not certain but that it should also be reduced by any loss suffered by the Company on your second machine, but we will leave that point open.

Another confusing circumstance is that you owe us some $450.00 for parts, and as writer remembers it we made you a proper clean up credit to cover what was due toward adjustment of breakages, etc. Mr. Smith is very likely to hold out for covering this parts bill out of your second installment if and when it becomes due, as this is an unwarranted loss in addition to whatever loss was suffered in the depreciation of the machines beyond the figure at which they would re-sell.

About all we can say at this time is that we certainly will fulfill the deal we made with you, taking certain credits for plain credits due us from you, amount not now determined, but that writer does not feel that we should exceed the terms of the contract by making any payment

now, before same is due according to the deal. We are very sorry not to be able to do anymore about it at this time, and beg to remain

Yours truly,

RRD.FB KEYSTONE DRILLER COMPANY.

DEFENDANT'S EXHIBIT NO. 106.
Letter, dated Feb. 6, 1928, from B. R. Clutter to Rex Downie.

(Filed May 16, 1931.)

[Cases Nos. 964 and 965]

Lakewood, N. J.

Feb. 6, 1928

Mr. Rex Downie

Dear Friend Rex in reply to yours of recent date and am at a loss to know why you don't remember the ~~reason~~ amount that you agreed to pay me if you had to take the second machine back as this was your own proposition.

Now Rex the fact of the matter is that Bankrupt proceedings is pressing me very close right at the present time and this would be a nasty claim to try to explain in the Supreme Court which of course bankrupt proceedings comes under it would get a lot of publicity that we do not want in connection with this case. I am willing to make any concession that is within reason to get the thing cleaned up before anything happens which is likely very soon. Can you come out and see what we can do.

Very Truly Yours,

B. R. CLUTTER.

DEFENDANT'S EXHIBIT NO. 107.

Keystone Driller Co. Letter, dated Feb. 16, 1928, to Burn R. Clutter.

(Filed May 16, 1931.)

[Cases Nos. 964 and 965]

February 16, 1928.

Mr. Burn R. Clutter,
Lakewood, N. J.

Dear Burn:

Upon receipt of your letter of February 6th we wrote to Mr. Elmire to see whether he remembers the deal the same way that the writer does. We now have reply from Mr. Elmire in which he says that as he remembers it the understanding was that if we had to take back the first machine, *and if* any one of the three things mentioned in the third paragraph of our memorandum should occur within the time limit, *then* a cash payment of something less than $1000.00 was to become due. This agrees with the writer's recollection, namely, that if the machines had to be taken back, and the contingency of payment should occur, then we were to pay in cash half of the amount which would have been due as a credit against machine price, (which credit was determined to be $1904.00, making the contingent cash payment $952.00).

So that is the status of our deal at the present time; —no one of the three things mentioned in the memorandum has happened as yet. Now however,—although you must not think that we make any offer on account of the suggested awkwardness of an examination of your accounts in any bankruptcy proceedings, for you have no actual property or credit in this contract at the present time, and therefore there is nothing in this to be listed among your assets.—we now make this offer in modification of the original deal, or rather in substitution for the original deal in view of the uncontemplated development which has occurred, namely that we have taken back your machine;—

The contingent credit of one fourth of the purchase price of your first machine, viz $1904.00 is displaced in the deal by a contingent cash credit of $952.00. And the verbal extensions of the time within which the contingencies named in paragraph three may occur with effect are hereby confirmed and further extended to the end of the year 1928; although none of these contingencies has oc-

curred at date of this writing, we now offer in consideration of the above to now pay you half of the contingent cash credit, viz $476.00, leaving the second half of it, $476.00 cash contingent upon the development of the ditcher situation.

We enclose check covering amount as offered above, which please return in case the offer is not accepted.

Now this is the best we can do, Burn, and we certainly hope that the cash will help you out in your present circumstances.

RRD.FB Yours truly,

CC H. H. Elmire. KEYSTONE DRILLER COMPANY.

DEFENDANT'S EXHIBIT NO. 108.

Check in the sum of $476.00 dated Feb. 16, 1928, from Keystone Driller Co. to B. R. Clutter.

(Filed May 16, 1931.)

[Cases Nos. 964 and 965]

No. B 3503

KEYSTONE DRILLER COMPANY

Beaver Falls, Pa., Feb. 16, 1928.

Pay to the order of B. R. Clutter $476.00 Keystone Driller Co. $476 and 00 cts. Dollars

KEYSTONE DRILLER COMPANY
CHAS. THEO. SMITH,
Treasurer.

To The Federal Title & Trust Co.
60-424 Beaver Falls, Pa.

Perforated: Paid 2-23-28 F T Co

Endorsements on back:

B. R. Clutter
Mrs. B. R. Clutter

(Lakewood, N. J. Bank stamp—dated Feb. 18, 1928.)

(Pay to the order of any bank or banker or thru the Pittsburgh Clearing House. Prior endorsements guaranteed. Pittsburgh Branch Federal Reserve Bank of Cleveland. 4 8-30 D 8-30 Feb. 21, 1928.)

DEFENDANT'S EXHIBIT NO. 109.

Letter, dated 11/15/1928, from B. R. Clutter to Rex Downie.

(Filed May 16, 1931.)

[Cases Nos. 964 and 965]

Lakewood, N. J.

11-15-1928.

Mr. Rex Downie,
c/o Keystone Driller Co.,
Beaver Falls, Pa.

Dear Friend Rex:

Glad that I did not have to call on you for so long a time for the balance of the money on the little transaction of the Shovel, but now I need the money very badly and you can do me no greater favor than to mail me a check for the balance to 17 Edgewood Court, Lakewood, N. J.

Hoping that you have had a successful year and with best wishes for the success of yourself and Company, I am

Yours truly,

B. R. CLUTTER.

DEFENDANT'S EXHIBIT NO. 110.

Letter, dated Nov. 28, 1928, from B. R. Clutter to Rex Downie.

(Filed May 16, 1931.)

[Cases Nos. 964 and 965]

CLUTTER CONTRACTING CO.
General Contractors

Lakewood, N. J., Nov. 28, 1928.

Mr. Rex Downie,
c/o Keystone Driller Co.,
Beaver Falls, Pa.

Dear friend Rex:

Received your letter of the 23rd and was very glad to hear from you but sorry that you have got the deal in

regard to the invention of the drop bottom on the ditcher or pull scoop so confused in your own mind as to what the arrangement was at the time you decided you would have to take the machine back which was done.

Now I think I can refresh your memory on this proposition in a way that you will realize and understand that I am absolutely right and justly entitled to this claim.

First in regard to the parts account. This account you thought was large however you had not taken into consideration the additional scoops that had been ordered on this particular machine and charged to me but never delivered. This together with credits on the large amount of parts that I was compelled to buy and you agreed to allow, practically eliminated the charge on the Parts account.

Now at the time that you thought that the machine would have to be taken back I brought the question squarely up to you as to whether that meant that I would have to loose the full amount that you had agreed to allow me on the deal in case you decided to take the shovel, and your proposition was that we would then make it a cash consideration and each share alike in the loss. This of course was in case the patent proved of value which was to be decided one way or another at the end of another year between ourselves and that the cash that I would receive if any would be $1904.00 which was half the amt of the total allowance that I was to have on the shovel. As to me indicating satisfaction in excepting your check for $476.00 it was not my intention by any means to do this but this agreement was you might say entirely on our honor and knowing you as I do I felt that you had just got the thing confused in your own mind and that I would see you in a short time and rehurse the proposition in a way that it would refresh your memory as to the arrangement we made, and that the wrong would be immediately righted. In fact there has been no question in my mind as to your honesty or sincerity to carry this deal right out to the letter but just the simple fact that you have got the thing confused in your own mind.

Now as to the figures of $952.00 I am at a loss to know unless you forgot how many times you was to cut the thing in two, the amt that is still due is $1428.00 and now I feel that is up to you to see that it is carried out as per our mutual agreement. This is certainly not ex-

ceeding the spirit of the deal in any manner but simply carrying out the true spirit of the deal.

Now Rex you stated in your letter that you and Elmire might run down and have another shore dinner and nothing would be more pleasing me than to see you come not only for dinner but to spend a few days with us and we certainly will do the best we can to make you enjoy yourselves.

Let me hear from you right away Rex please also tell me when you are coming out.

With Best Regards,

B. R. CLUTTER.

DEFENDANT'S EXHIBIT NO. 111.

Letter, dated 11[12]/13/28, from B. R. Clutter to Rex Downie.

(Filed May 16, 1931.)

[Cases Nos. 964 and 965]

CLUTTER CONTRACTING CO.
GENERAL CONTRACTORS
Lakewood, N. J.

11/13/28

Mr. Rex Downie c/o Keystone Driller Co.

Dear Rex Reed your letter of Dec. 4th and contents of same noted. There is absolutely no misunderstanding on my part. This proposition was thoroughly thrashed out adjusted and readjusted the credit of the one fourth of the cost of the machine was brought up and I explained to you that that did not mean anything to me that it was only handing me something with one hand and taking it away with the other. I explained

that a deal of this kind would be very unsatisfactory to me. It was then agreed to forget the credit and each share equal in the loss or the $3808.00 that would have been due as a credit on the machine which would leave a balance of $1904.00 to be paid to me in cash if the patent proved of value these figures were expressed in round numbers by you and myself so how could there have been any misunderstanding. Now Rex if you do not consider that the patent is of this much value to you just transfer it over to me and I will gladly receipt the claim if it is worth more than that to you pay the claim. The fact of the matter is I am the original inventor. This I know and it was also admitted by you in your voluntary act of coming to me for a settlement without any demand or request. I believed that you was trying to make amends for the wrong that that had been done me. A settlement was arrived at later you decided to take the machine. The settlement was readjusted and agreed upon again by arranging for a cash consideration of half the amt that I should have got in credit now apparently you want to settle for ¼ of the consideration that we agreed upon. Now Rex there is no use of quibbling over this proposition any farther. Either you do or you don't intend to pay the claim, and I want you to take a definite stand one way or the other, one that cannot possibly be misconstrued as meaning any thing except just what you intend to do.

You can tell Mr. Smith for me that I am not in any way indebted to your company. Please let me hear from you by return mail.

Very truly yours,

B. R. CLUTTER.

DEFENDANT'S EXHIBIT NO. 112.

Letter, dated April 20, 1929, from Geo. E. Wagner to J. V. Downie, c/o Keystone Driller Co., and Envelope.

(Filed May 16, 1931.)

[Cases Nos. 964 and 965]

---

rec'd Apr 22nd 29.
R.D.

Akron, Ohio,
April 20, 1929.

Mr. J. V. Downie,
Keystone Driller Company,
Beaver Falls, Pennsylvania.

Dear Sir:

Your separate letters of April 12, 1929, addressed to us have been received and the contents thereof noted.

The statements made in your letters as to an alleged proposition by us to suppress or conceal a report of any evidence concerning your ditcher litigation in exchange for something of value are entirely unfounded and unwarranted by any matters which we presented at the two informal interviews we had with you.

Both of these interviews, the second of which was requested by you, were for the purpose of discussing and perhaps settling the matter of alleged infringement of your patents on ditchers by our licensee, The Star Drilling Machine Company, Akron, Ohio, who has been notified of such alleged infringement by your attorney, Mr. Siggers. The receipt of such notice by Star was somewhat a surprise to us in view of statements made by your Mr. Rex Downie to both of us at various times, that "if all ditchers were as clear of ours as yours are, there would be no suits."

You did mention some matters pertaining to the use of a ditcher at Joplin, Missouri, which might have some bearing on your ditcher litigation and in connection therewith you also mentioned one Burn Clutter who is in no way connected with us or under our control. From your statements at these interviews concerning your dealings with Burn Clutter, it seems to us that it is yourselves who have actually attempted to suppress evidence which may be of serious consequence in your ditcher litigation.

We have no knowledge of the dickerings you say Burn Clutter has had with you excepting what you may

have said concerning this at our meetings with you, nor did we make any proposition to you to induce Burn Clutter to conceal or suppress any knowledge he may have regarding the matter.

Yours very truly,

GEO. E. WAGNER.

(Envelope)

After 5 days, return to

GEO. E. WAGNER
~~The Star Drilling Machine Co.,~~
475 Washington St.,
Akron, Ohio.

Registered #17033
Return Receipt Demanded

Return Receipt Requested

Mr. J. V. Downie
c/o Keystone Driller Co.
Beaver Falls,
Pa.

2 cent stamped envelope with one 1 cent, one 2 cent and one 15 cent postage stamp affixed and cancelled.

(Beaver Falls, Pa. Apr. 22 1929 Registered)
(Akron (Goodrich St. Sta.) Ohio Apr. 20, 1929 Registered)

1319

Filed this

FILED
MAY 16 1931
At ..... O'clock ..... M.
F. J. DENZLER, Clerk,
U. S. District Court, N. D. O.

Defendant's Exhibit
No. 113

STATEMENT

Date April 16, 1925

To whom it may concern;

I, Burn R. Clutter, now residing in Lakewood, N. J. was employed by the Keystone Driller Co. of Beaver Falls, Penna., from 1914 until sometime in 1919. My work with said firm was that of salesman and demonstrator, and in the course of this work I became skilled in the operation of the Keystone excavator.

In December of 1919 or January of 1920, after I had left the employ of the said Keystone Driller Co., and while I was employed by the Orange Mining Co of Joplin, Mo. in the capacity of Keystone excavator operator I assisted in the construction of certain two drop-bottom ditcher scoops.

I operated the excavator on the excavation for the basement of the Joplin Supply Company building on Third Street, Joplin, on which job the drop bottom ditcher was tried.

The device consisted of (1) a boom pivotally mounted for hoisting and swinging, (2) an I-beam ditcher stick pivotally attached to the outer end of the boom at a point on the stick about fifteen inches below its upper end, (3) a pair of sheave stands pivotally attached to the upper surface of the boom at a point near the outer end of it and carrying a sheave, (4) a hoisting cable extending from the machine and engaging said sheave, (5) a pair of links pivotally connecting the pin of the hoisting sheave with the upper end of the ditcher stick, (6) a scoop rigidly attached to the lower end of the stick having (7) a falling bottom pivoted to the sides of the scoop at a point near the open end of the latter and near

the lower edge of the sides, and (5) a hauling line extending from the machine to the scoop for drawing it toward the machine.

Elements (1) to (5) inclusive and element (5), as listed above, were precisely the regular Keystone ditcher parts as manufactured by the Keystone Driller Co., under the L. P. Clutter patent No. 1,317,431. The new contrivance consisted in rigidly fastening a scoop body, made after the pattern of the body of the Keystone skimmer scoop, to the lower end of the stick, providing for discharge by the use of a pivoted bottom.

Two scoops were made in order that one might be always available as a standby to insure against the delay of the job which might have resulted from the necessity for repair or revision.

Both scoops were in about the same stage of development when use as ditchers was given up. Both scoops were dismantled shortly after having been used on the Joplin Supply Co. job and were converted into skimmer scoops.

Experimentation was abandoned; and so far as I was concerned this was because of the extreme care required to make the device as a whole operative, especially the latching arrangement; and because I did not conceive the advantage of the dumping bottom to be of sufficient practical worth to justify the expense of the re-design and further experimentation which would have been necessary in my opinion to make the device commercially useful.

Burnard R. Clutter

Subscribed and sworn to before me this 16th day of April 1925.

John L. Burdett

DEFENDANT'S EXHIBIT NO. 114.

Form of Agreement between Burn R. Clutter and The Keystone Driller Co.

(Filed May 16, 1931.)

[Cases Nos. 964 and 965]

PRINTER'S NOTE:

This Exhibit, being identical with Defendant's Exhibit No. 98, printed hereinbefore, has been omitted to avoid duplication. (See Page 1298 of Exhibits, Vol. IV.)

DEFENDANT'S EXHIBIT NO. 115

U. S. Patent No. 1,249,805, Dec. 11, 1917

To G. A. Morison, S. R. W. M. Bager & O. F. Kaeser

Dipper

(Filed May 16, 1931)

[Cases Nos. 964 and 965]

PRINTER'S NOTE:

This patent having been reproduced herein before as Defendant's Exhibit No. 80, the same is omitted at this point to avoid duplication. (See Page 1291 of Exhibits, Vol. IV.)

DEFENDANT'S EXHIBIT NO. 129.

Affidavit of Robert Rex Downie, verified Dec. 30, 1931.

(Filed as a Pleading in Case No. 964 on Dec. 31, 1930. See page 82 of Vol. I of this Record.)

(Filed as an Exhibit May 16, 1931.)

[Cases Nos. 964 and 965]

AFFIDAVIT OF ROBERT REX DOWNIE.

STATE OF OHIO,
COUNTY OF CUYAHOGA, SS.

ROBERT REX DOWNIE, being duly sworn, deposes and says:

I am the inventor of patent No. 1,511,114 and I am an officer of the Plaintiff company.

I invented the excavating machine disclosed in that patent prior to learning anything about the machine or the experiment at Joplin. News came to me of the Joplin machine and experiment, however, before I filed my patent application from which the said patent issued. As soon as I learned of the Joplin machine and experiment, I investigated the same and reported what I learned about the machine and the experiment to Mr. E. G. Siggers of Washington, D. C. who was at that time our patent attorney, and who is now deceased. I also reported to him my own work on the machine of the patent. Mr. Siggers reported that the Joplin experiment was an abandoned experiment. He also advised that the patent application should be filed in my name which was done at his advice. He prepared the application for the patent, advising me that it did not embody any invention in the Joplin machine and accordingly I signed the same and it was filed.

I have examined the machine illustrated in Defendant's Exhibit 26 and have read the testimony given in connection therewith by witnesses called for the Defendant. I find that none of the inventions in the Downie patent, No. 1,511,114, are embodied in this machine. I find that the machine illustrated in Exhibit 26 is incapable of performing the important functions of the patented machine or of operating as the patented machine does. After the infringement of this patent by The Byers Company, I made further investigations regarding the Joplin experiment and the Joplin machine for the purpose of submitting this information to Mr. Philip E. Siggers and to Mr. Janney of the patent law firm of Emery, Booth, Janney &

Varney. Among those whom I interviewed was Mr. Burn Clutter who had been associated with the Joplin machine and the Joplin experiment. I had known Mr. Clutter for a number of years. He had at one time been employed by our company and we had had considerable dealings with him and were familiar with his character and disposition. I was interested that the facts which he reported to me about the Joplin experiment and the Joplin work and which I reported to my patent lawyers should be preserved, as I did not want him later to change his story. It also occurred to me that there might be some patentable invention about the ditcher scoops which were employed on the Joplin machine and whose history after they were removed from the machine I was unfamiliar with. I knew the Joplin machine had been dismantled and abandoned, but I did not know what had become of the scoops that were used upon it.

At that time Mr. Clutter wanted to buy an excavator and did not have the money to buy it. Accordingly, I made him a proposition to waive the final payments on such a machine if he would assign to the Keystone Driller Company a quit claim to all right, title and interest he had in the excavator scoops and furnish me an affidavit containing the information which he had given me regarding the Joplin machine and the Joplin work in order that I would be protected as against what I reported to the patent lawyers. Mr. Clutter told me and stated in his affidavit among other things, as follows:

> "Experimentation was abandoned; and so far as I was concerned this was because of the extreme care required to make the device as a whole operative especially the latching arrangement; and because I did not conceive the advantage of the dumping bottom to be of sufficient practical worth to justify the expense of the re-design and further experimentation which would have been necessary in my opinion to make the device commercially useful."

I did not ask Mr. Clutter to sign the affidavit until he had fully considered the same and read it over. What he told me about the abandonment of the machine and experiment had been also told me by others who had seen or worked with the Joplin machine and experiment. The proposed deal by us is set forth in the Memorandum Agreement marked "Appendix A" and attached to the brief filed herewith, though this Memorandum was never signed by the parties. There was no other Memorandum

of agreement oral or written between Mr. Clutter and me, or the Keystone Driller Company regarding this matter.

My purpose in making the waiver of the payments contingent upon the success of the patent litigation was that if the patents on the excavator failed, even a quit claim upon any invention in the scoops would be of little or no value to us.

I then submitted the information I had gathered from Mr. Clutter and others regarding the Joplin machine to Mr. Philip E. Siggers and to Mr. Janney. Both advised that in their opinion the Joplin experiment was an abandoned experiment and the Joplin machine did not anticipate or negative the novelty of the patent, No. 1,511,114. Later the same questions were submitted to F. O. Richey of Richey & Watts and he rendered the same opinion. After receiving the opinions of Mr. Janney and Mr. Philip E. Siggers, the suit was instituted against The Byers Company and was decided in our favor in January, 1929.

In the meantime Mr. Clutter had begun to default on his payments and it was necessary for the company to repossess the machine. It was then, and not until then, that Mr. Clutter began to intimate that he understood that one of the considerations for the waiving of these payments was his concealing or suppressing the testimony, although I had made no such agreement with Mr. Clutter. Our reply to him was that he was at liberty to tell any and everybody he pleased about the Joplin machine and Joplin experiment, as we had fully investigated the same and submitted it to our attorneys who had reported that it was an abandoned experiment and did not anticipate anyhow. We also told Mr. Clutter what he well knew that the Joplin machine and Joplin experiment were known to a number of people. Then we went ahead and repossessed the machines. We heard little more from Mr. Clutter until after Judge Jones decided the Byers case in our favor and the patents became valuable. Then Mr. Clutter again approached us in such a manner and with such words as to lead us to believe that he was proposing that for compensation from us he would remain silent or conceal what he knew about the Joplin work and machine. We were also approached by his brother, Mr. B. C. Clutter, and by Mr. George E. Wagner, a friend of Mr. Clutter, in such a manner and with such words as to lead us to believe that they were either acting for themselves or for Mr. Burn Clutter in making similar proposals to us. In consequence we wrote to Mr. B. C.

Clutter the letter attached to the brief filed herewith and marked "Appendix B" and to Mr. Wagner the letter attached to the brief and marked "Appendix C." We received a letter from Mr. Wagner written on behalf of himself and Mr. B. C. Clutter, denying that they had in mind making any proposal to us to suppress or conceal any evidence for a compensation.

We heard no more of this matter until the Defendants in this case served notice of the taking of the testimony of Mr. Burn Clutter.

I have read the depositions given by Mr. Clutter in this case. I attended the first deposition. During a recess in the first deposition Mr. Clutter asked for a conference with me after the termination of the deposition. This conference was never had and later he returned and gave the second deposition. I have read over the second deposition, particularly the reports he has made of the interviews he had with me and I deny that I either at the interviews which he reported, or at any other time, made him any offer or made any request that he either suppress or conceal any evidence regarding the Joplin machine or the Joplin experiment. Manifestly, it would have been absurd for me to make such an offer had I been disposed to do so, which I was not, because all the evidence which Mr. Clutter had about either the Joplin machine or experiment was known to a half-dozen or more other people, most of whom were not in our employ and some of whom had been released from our employ since the experiment was made.

ROBERT REX DOWNIE.

Subscribed and Sworn to before me this 30th day of December, 1930.

FLORENCE KOFSKY,
Notary Public.

(Notarial Seal)

FLORENCE KOFSKY

INDEX

	PAGE
Motion to Vacate Supersedeas	1
Exhibit "A"—Memorandum on Rehearing	2
Exhibits "B, C and D"—Testimony	5

DEFENDANT'S EVIDENCE

	DI.	CR.	REDI.	RECR.
Bernard R. Clutter	5	31	65	67

PLAINTIFF'S EVIDENCE

Veleair C. Smith	70	79		
Frank Oliver	79	96	104	
John L. Burdge	105	107		

Exhibit "F"—Decree of the District Court	109
Notice and Proof of Service of Motion to Vacate Supersedeas	111
Affidavit of Service	112
Defendant's Opposition to Motion	113
Order Denying Motion to Vacate Supersedeas	116
Causes Argued and Submitted	116
Decree No. 6065	117
Decree No. 6066	117
Decree No. 6067	118
Decree No. 6068	118
Opinion	119
Petition for Rehearing	125
Order Denying Petition for Rehearing	157
Memorandum on Order Denying Petition for Rehearing	157
Clerk's Certificate	160
Orders allowing certiorari	**161**

PROCEEDINGS IN THE

United States Circuit Court of Appeals

FOR THE SIXTH CIRCUIT

MOTION TO VACATE SUPERSEDEAS

(Filed April 13, 1932)

Now comes the Keystone Driller Company, Plaintiff below, and moves this Honorable Court:

(1) That the orders entered by the Court below on July 29, 1931 (Record, Volume II, pages 1114 and 1145) granting supersedeas to the Defendants and suspending the injunctions be vacated, and that the Court below be instructed to issue injunctions against each of the Defendants as provided in paragraphs 5 of the respective interlocutory decrees (Record, Volume II, pages 1109 and 1139); or

(2) That the Court give permission to the Plaintiff to present this Motion to the trial court and authorize the trial court to reconsider the questions of supersedeas and of issuing the injunctions in view of the changes in the situation since the time the interlocutory decrees were entered.

THE KEYSTONE DRILLER COMPANY
F. O. RICHEY,
H. F. MCNENNY,
RICHEY & WATTS,

By.....
Its Attorneys.

EXHIBIT "A"

(Memorandum on Rehearing Under Order of the Circuit Court of Appeals Entered October 15th, 1931).

Jones, J:

In this case an interlocutory decree entered in January, 1929, was affirmed November 5th, 1930. On October 15th, 1931, an order was entered by the Circuit Court of Appeals which in effect directed this Court to re-open the case for the purpose of receiving and considering testimony regarding only an alleged prior use and the suppression of evidence of one Clutter, relating thereto.

It is claimed by the defendants (appellants above) that the prior use of the rigid scoop attachment and drop bottom, for more accurate spotting, occurred at Joplin, Missouri, early in 1920; that this was made by Clutter as the result of an earlier idea in 1916; that Downie appropriated Clutter's invention and attempted to pay him for it, and for his silence in respect of the alleged prior use at Joplin, by letting Clutter have a new excavator for half price. Downie's conception date was the summer of 1920. His patent was applied for a year later and issued in October, 1924.

The evidence of prior use and alleged suppression seems to be obscure, indefinite and unsatisfactory as a basis upon which now to sustain the claims made by the defendant. It appears that Clutter now repudiates his affidavit made April 16th, 1925, that the scoop at Joplin was an abandoned experiment of no practical worth. He testifies that Downie wrote it, but that he never read it and did not know its contents. This is effectively controverted by the notary before whom he signed and swore to it. If he swore to that affidavit, his present testimony is false. His credibility, in my opinion, has been so far impaired as to effectually destroy its weight. It is idle to suppose that Clutter did not know what he had signed and agreed to with respect to the Joplin use. If he did not, he then was under no obligation of silence as far as he was concerned, and therefore under no suppressive influence. The conduct of Clutter, both before and after the Byer's suit, is of such a character that little credibility can be accorded his evidence with respect to the prior use, unless it be adequately corroborated and supported; nor is it easy to understand why Clutter took

Exhibit A

no steps to secure for himself the benefit of any novel change or attachment which he now believes was his invention. If he was told that Downie had made application for a patent on his improvement, it would seem to have been the natural thing to have raised the question then. It is inconceivable that Clutter, whose brother was an inventor of ditchers, and himself an experienced operator, would have been content to let the time go by for applying for a patent, if he thought he had invented something patentable at Joplin in 1920. In any event, the subsequent shabby treatment of him by Downie, in respect to his account and the re-possession of the machines sold to him as the price of his silence, all had transpired before the trial of the present case. Yet it seems to me he did nothing consistent with one then under no obligation to remain silent.

What has been said here is not intended as exculpation of Downie's actions. His anxiety to protect his patent led him into a maze of questionable complications and temporizing, which, in the view I take of the alleged use, were wholly unnecessary, although inexcusable. If the matter lay between Clutter and Downie, the answer would be simple; but the issue is whether the defendants have been deprived of a real defense through the wrongful conduct of both.

A great part of the evidence as to prior use depends upon recollections given in 1930 of incidents occuring in 1920, and are certainly open to serious weaknesses. I am not impressed with the independence of Hazen's recollection without the aid of adequately framed leading questions and defendant's Exhibit 26, prepared in 1929. The same may be said as to Cummings' and the Culbertson's depositions. Wallower's deposition indicates that his recollection has been somewhat clarified in 1930 over his affidavit of May, 1925, as regards the satisfactory character of the latch mechanism. From such evidence, gathered after the passage of ten years, I find myself unable to visualize a completed and successful invention at Joplin. The Barbed Wire Patent, 143 U. S. 275, 284, 289. The changes there made in the machine were not satisfactory and were not developed, in my opinion, to the point where they constituted anticipation of Downie. The drop bottom rigid scoop tried out at Joplin was not persisted in, but, on the contrary, it was abandoned five years before the evil complained of was

Exhibit A

set in motion by the affidavit of April 16th, 1925. Symington Company vs. National Malleable Castings Company, 250 U. S. 383; Buser et al vs. Novelty Tufting Machine Co., 151 Fed. 478, 492.

I am more impressed with the testimony of Oliver and the affidavit of Wallover. The defendant at first objected to the introduction of the latter, but later withdrew objections. Oliver testified that after the skimmer bucket had been converted over to a ditcher bucket, there was difficulty with the latch arrangement; that at first they tried it with the pull rope, with the man standing alongside of the machine, and that the driver on the wagon would sometimes dump it with his hands; that they used a club or stick, or repeated the first operation mentioned. To close the bottom of the bucket, it was let down to the ground; it would not close by momentum swinging. He further testified that the ditcher scoop was not rigid and was not used wherever there was rock to be excavated. The machines thus used were disposed of as skimmer buckets; that is, they were both converted back to their original state. He denied that he told Clutter that Downie was taking out or had taken out a patent on the drop bottom ditcher scoop. Wallower's affidavit, under date of May 8th, 1925, describes the changes made from the skimmer scoop to the drop bottom rigid scoop. Two machines were so changed and were tried on the job for six weeks. While the falling bottom was advantageous in discharging sticky clay, it was not sufficient to continue the use of the scoops, and the latch mechanism was never reduced to a positively acting and properly constructed form. In March or April, 1920, their use as ditchers was abandoned and both scoops were converted into skimmers and disposed of.

When the conditions of Clutter's alleged rewarded silence were, as he thought, breached by the repossession of his machine, it is difficult to believe that he would longer remain silent, if he had in truth made a prior use at Joplin of his claimed original invention.

I find that the Joplin machine was not satisfactory; that it was never perfected to the point of successfully accomplishing the result claimed for it; that it was an abandoned experiment. My conclusion is that it was not a prior use constituting an anticipation of the Downie patent. No satisfactory showing of the Joplin use appearing, there was no suppression affecting the rights

of the defendant. Upon that phase of the case, however, I find that Downie endeavored to secure for his own protection whatever rights Clutter may have had to the improvement, for the purpose of avoiding any trouble in sustaining his patent, together with the denial of prior use by Clutter. I find that Downie did not successfully accomplish this purpose; that such arrangement as was entered into with Clutter was breached prior to trial of this case, and that Clutter was under no suppressive influence or obligation at that time respecting his alleged invention or prior use. I find there was no suppression of evidence materially affecting the defendant's rights.

United States District Judge.

March 24th, 1932.

EXHIBITS "B, C and D"

Thereupon the defendant called as a witness BERNARD R. CLUTTER, who, being first duly sworn, was examined and testified as follows:

DIRECT EXAMINATION by Mr. Zane:

Q. State your full name, please?
A. Bernard R. Clutter.
Q. Where do you live?
A. 17 Edgewood Court, Lakewood, New Jersey.
Q. What is your occupation?
A. Road construction.
Q. Where are you now employed?

Exhibits B, C and D Bernard R. Clutter

A. By the Liddle & Pfeiffer Company, Perth Amboy, New Jersey.

Q. Are you engaged in work, or had you been before you came here?

A. Yes, sir.

Q. And where was the work?

A. It is a country road between Perth Amboy and Woodbridge—a section of it.

Q. Have you any designated position with regard to that work? What is your duty, your position?

A. Superintendent.

Q. Superintendent of road work?

A. Yes, sir.

Q. And that is laying what kind of a road?

A. Concrete roads.

Q. Are you the same Bernard R. Clutter who testified at Toledo in the case of the Keystone Driller Company against the Osgood Company and another company. there, General Excavator Company?

A. I testified at Lakewood, not at Toledo.

Q. Yes, you gave a deposition at Lakewood?

A. Yes, sir.

Q. How many depositions did you give in that case?

A. Two.

Q. And the second deposition was given at what time, do you remember?

A. October, I believe, 1930.

Q. How old are you, Mr. Clutter?

A. Fifty.

Q. Have you been subpenaed since you came here?

A. Yes, sir.

Q. You are the same Bernard R. Clutter who testified in your first deposition about a certain scoop which was used on a ditcher at Joplin, Missouri? You are the same man, aren't you?

A. Yes, sir.

Q. Now, where were you employed after you finished that job of excavating at Joplin, Missouri,—where you used the scoop on the excavator?

A. I took a contract for loading cinders on the Missouri Pacific Railroad, Caney, Kansas.

Q. How long were you there?

A. Possibly a month or so, maybe two or three months; I am not sure.

Q. And then where did you go?

A. I received a wire from the Keystone Driller Company asking if I would consider the proposition of going to the Trinidad Island down just off the South American coast, for the purpose of erecting and starting some machinery that they were sending down there.

Q. Was excavator machinery in that?

A. Yes, sir.

Q. And what was the result of that? Did you accept the employment and go?

A. I might state while my dealing was with the Keystone Driller Company, they informed me that I was to go down there for the Tidal Engineering Corporation of New York City, that the Tidal Engineering Corporation had asked them to secure the services of the best man available, and that they had chosen me for the job if I would accept it.

Q. In connection with what kind of machinery?

A. The Keystone excavator machinery.

Q. The Tidal Engineering Company, was that the company that had laid out the plan of work, and so on?

A. Yes, sir, they were the designers of this reclamation work in Trinidad.

Q. Well, did you go to Trinidad?

A. I did.

Q. Now, when was that?

A. That was in the summer of 1920.

Q. And how long did you stay in Trinidad?

A. I came back in, I believe it was April of 1921.

Q. Now, did you complete that work down there that you were doing in regard to the Keystone excavators?

A. I completed the work that I went down there to do; in fact, I stayed on in charge of field work for quite a while.

Q. When you got back to this country where did you go to work?

A. Well, I went up to demonstrate a machine for the Keystone Driller Company at North Dighton. I forget whether that was the first thing I did or whether that was something I did later.

The Court: Where is North Dighton?

The Witness: North Dighton is in Massachusetts near Fall River, I believe. But I forget whether that was immediately after or sometime later, but

Exhibits B, C and D Bernard R. Clutter

I went to work for J. F. Chapman of Hillside on the recommendation of the Keystone Driller Company.

Q. How long were you at that?

A. I worked for Mr. Chapman for about—well, I think about one year and during the next spring,—

Q. Next spring of what?

A. 1922, Mr. Chapman's work was very slack, and he asked me if I could rent out one of his shovels, which I did to James Wilson.

Q. When you were working for Chapman were you working for the Keystone Driller Company?

A. I was working for Mr. Chapman.

Q. Was he in connection with Keystone Driller?

A. No, I was operating Keystone shovels for Mr. Chapman. So I arranged to rent one of Mr. Chapman's machines to Mr. Wilson to do some work at Lakewood, New Jersey, and Toms River, New Jersey, and I went along with the machine under the employ; that is, I was paid by Mr. Wilson to operate Mr. Chapman's machine.

Q. How long were you there?

A. Well, I am still there in Lakewood.

Q. Lakewood and Toms River?

A. Yes. I finished the work there.

Q. After Wilson whom did you work for?

A. I went to work for myself. I purchased the machine from Mr. Wilson, one that he later bought after he had gone down to do this work, and did a little contracting in a small way.

Q. Do you know Mr. Rex Downie of the Keystone Driller Company?

A. Yes, sir.

Q. How long have you known him?

A. Possibly sixteen or seventeen years.

Q. And where did you first know him?

A. At Beaver Falls.

Q. And where was he working then?

A. Well, he is the son of Mr. Downey, who was manager of the Keystone Driller Company. When I first knew Rex he was going to school.

Q. And you have known him ever since, of course?

A. Yes. I didn't know him so well then, but I knew him, that was about all, until later Mr. Downey

had me take him out on the road to show him what I could about the shovels.

Q. Now, at any time at or near Lakewood did you see and have a talk with Mr. Rex Downey after you came back from Trinidad?

A. Sometime after I came back from Trinidad.

Q. Now, about what time was that first conversation?

A. That was in the early part of 1925.

Q. And where was it?

A. At my residence in Lakewood.

Q. Was Mr. Downey accompanied by anybody?

A. Yes, sir.

Q. Who was the man with him?

A. Mr. Elmire.

Q. Howard Elmire?

A. I believe Mr. Elmire is the man, Howard Elmire, yes.

Q. How did Mr. Downey happen to come to see you? Was it by arrangement?

A. No, I knew of no arrangement. I don't believe I knew he was coming; I am sure I didn't, but I don't think I did. I don't remember that I did know he was coming. If I did, I didn't know what it was for.

Q. Was it voluntary on his part? Had you requested it?

A. No, it was on his part.

Q. Was Mr. Elmire present while you were talking to Mr. Downey at that first conversation?

A. Well, we talked in the house; Mr. Elmire was present while we was—well, just visiting in the house, you might say.

Q. What were you talking about in the house?

A. Nothing. I don't remember; it was nothing of any importance, just in a casual way of old times.

Q. And then what took place?

A. Rex asked me—

Q. You mean Mr. Downey?

A. Yes, Rex Downey, asked me to go on the outside of the house, to take a walk out; he wanted to talk to me; which we did.

Q. Did he say anything about Elmire?

A. Well, he said this conversation was absolutely private, personal, and he didn't want anybody to know anything about it but me and him.

Q. Well, what happened then? What did you do?

A. We went on the outside of the house.

Q. Where did Elmire stay?

A. He stayed in the house.

Q. All right. You walked on the outside of the house and had a conversation?

A. Yes.

Q. Tell us what that was.

A. We walked down the yard and Mr. Downey said it was—I asked him what he wanted to see me about, and he said it was in regard to that drop bottom ditcher scoop that I had had made out at Joplin, Missouri. I asked him what about it. Well, he said they had taken out a patent on it and there was a possibility they might have to go into the courts to defend the patent on other companies who were infringing, and as I had made the first one out at Joplin, Missouri, he thought I could co operate with them in protecting the patent. I told him that if I had made the first one it was my patent and not theirs, and we had some conflab about it.

Q. Some what?

A. Well, I might say conflab or argument about it, whatever you want to call it.

Q. Tell us what was said. Tell us all you can remember.

A. And I told Mr. Downey I thought it was my invention and not their invention. Well, he said irregardless of that fact, they had a patent, and that I could co-operate with them in the protection of that patent, and he said, "Now, you know that you haven't got money to go into the courts to fight this company," and he said "I know it, too." He said, "Burn, let's be plain and talk plain." Which was facts. He said, "If there has been a wrong done let's get together and right the wrong." Then he said he had a proposition to make me. His proposition was—

Mr. Richey: Just what he said.

Q. Yes, tell us what he said.

The Court: In substance. It is not necessary for you to remember the exact words, but in substance what did he say.

A. He made me an offer that he would give me—he said he, would give me a half interest in a new machine if I would keep quiet about the thing, and in that

way I would be no operating with them. In other words, that they had the patent and they could hold it if I would keep out of the picture.

Q. You say a machine. Did he say what kind of a machine?

A. New Keystone excavator.

Q. Go on now with the conversation. What did he say to that, in substance as nearly as you can remember.

A. Well, there was nothing else to it. It was an opportunity and I grasped it to accept a half interest in a shovel, and say nothing more about the patent.

Q. Well, did you say anything about what you would do in regard to the patent? Did you say you would keep still, in other words?

A. Yes, I did. In fact, I wasn't even to tell Mr. Elmire what the business was.

The Court: Keep still about what?

The Witness: About the patent, my work of this invention that I got up at Joplin, Missouri.

The Court: At the time Downey came, you didn't know you had an invention, did you, at Joplin?

The Witness: May I make this plain to the Court?

The Court: Well, I would like to have it cleared up. You didn't seem to know when Downey came what you had at Joplin, did you?

The Witness: When I was with the Keystone Driller Company may I make this plain to the Court, Mr. Zane?

Mr. Zane: Yes, tell him why you hadn't made an application for the patent.

The Court: That would be interesting to know, why he hadn't discovered something.

Mr. Richey: We have no objection to his stating that.

The Court: We just want to know if you had anything at Joplin and if you knew you had something at Joplin, why you didn't do something about it before Downey came.

Mr. Richey: Your Honor, this is asking him for a conclusion. If I can put somebody on to contradict this point, I have no objection to his answer.

The Court: I can't make any promises in advance. We are seeking to get at the truth.

Mr. Richey: Yes, sir, but my point is this witness is not telling the truth.

The Court: That is not necessary, Mr. Richey. It won't get you a thing.

Mr. Richey: I will withdraw that remark, then, but my point is I want to put somebody on to contradict him.

The Court: Well, I won't make any promises.

Mr. Zane: Your Honor, the reason is stated in the first deposition, which is already in.

The Court: Well, if that is in, we won't need to inquire about that.

Mr. Zane: Can I state it now, what it says there? The first deposition says that the reason he hadn't applied for a patent was because back in the summer of 1920—could you turn to that? I would like to read it exactly to the Court. (Reading) "Now, Mr. Oliver that is mentioned in this answer is an officer of the Keystone Company. It was some little time after we had used the scoop on this machine, but in a conversation I informed Mr. Oliver that I was going to apply for a patent, and he informed me that the office didn't know anything about it, but that Mr. Downey had been working on or working up a drop bottom scoop prior to this operation and was filing for a patent on it or taking out a patent. He said that that office didn't know anything about that."

Q. When did this conversation with Oliver take place?

A. During the early part of the summer of 1920.

Mr. Richey: Now, we have Mr. Oliver here and he will deny that.

Mr. Zane: Well, yes, but why inject that sort of thing?

The Court: I was just curious to know why for the first time in 1925 Clutter showed any interest in securing a patent.

Q. That statement made by Mr. Oliver, did you believe what he told you?

A. I did. At the time Mr. Oliver told me this we were in the erecting room—not the erecting room—the big main building of their Joplin plant. We were on the opposite side from the office of this large building. The building is a hundred and fifty foot by three hundred, or a hundred and forty by three hundred, approximately, and we were walking towards the office, when I informed Mr. Oliver that that scoop was worth something and that I was going to apply for a patent on it.

The Court: Whereabouts are we now? Are we in New Jersey or back in Joplin?

Mr. Zane: This is at Joplin when Oliver told him this.

Q. And it was after that, in the summer of 1920, that they hired you down at Trinidad?

A. Yes, sir.

Q. Now, having cleared up that matter, we will go back to that conversation which you were having with Downey. After he said something about righting the wrong, and about your keeping still about the use out there at Joplin, what next took place?

A. I agreed to accept his proposition, his offer.

Q. What was said?

A. And I asked him should we go in the house and write a contract.

Q. You misunderstood me. You said you agreed to accept. What did you say?

A. I told him all right. That is the words, as near as I can remember.

The Court: Let me understand it. You agreed to accept a half interest in one machine, is that it?

Mr. Zane: In one machine.

The Court: And keep still?

Mr. Zane: Yes, sir.

The Court: That was the price he was surrendering his patent for, was it?

Mr. Zane: Oh, yes. The machine was worth $8200.00.

The Court: He was perfectly satisfied with a half interest in one machine to surrender his invention. Is that the force of it?

Mr. Zane: Well, that is all he thought he could get out of it. But the point is on the issue of suppression, your Honor.

The Court: I understand what you claim.

Q. You said something about drawing up a contract. What did he say?

A. He said we would have to do that later. He said there was a question as to whether there could be any contract drew up that would be of any value. If there was anything in writing it might serve to invalidate the patent.

Q. Well, what did you say to that? By the way, did you know at that time that your time for filing a patent had run out?

A. Yes, sir. I knew two years after you put the machine to work—

Q. Now, what else took place at that conversation? Did he say anything about coming back?

A. Yes, he would see what could be done about it, and see me a little later.

Q. Well, now, what was the arrangement about the machine?

A. I gave him a verbal order for the machine at that time. He said the settlement would have to be given in full for the machine.

Q. What do you mean by that?

A. Notes and mortgage for the full amount of the machine.

Q. Of the price of the machine?

A. Yes, for full price of the machine.

Q. You would give a contract?

A. I would sign a contract for the full amount, and I would have to trust to their honesty to take care of the credits.

Q. Now, did he say anything to you about saying anything to Elmire?

A. He said not to say anything to anyone.

Q. Now, what was the price of that machine?

A. The machine as ordered with the attachments was, I think it was $8240.00.

Q. Mr. Clutter, I show you a letter and ask you if you received that letter at about the time of its date?

Mr. May: The date of that is 1925?
Mr. Zane: February 11th, 1925.

A. I think—I am sure I did receive that letter.

Mr. Zane: This is not the original.

Mr. Richey: Mr. Zane, that letter wasn't submitted in connection with Mr. Clutter's deposition before, was it?

Mr. Zane: This is Defendant's Exhibit No. 95.

Mr. Richey: Yes, he is now putting in matter that wasn't put in with his deposition before.

The Court: Well, it goes here to the issue of suppression.

Mr. Richey: The same may be said to be true of witnesses we have, some of them.

Mr. Zane: No, this letter is a letter received by Mr. Clutter in regard to this matter.

The Court: All right. Go ahead.

Mr. Zane: The letter is a letter addressed to B. R. Clutter, Edgewood Court, Lakewood, New Jersey, dated February 11th, 1925, signed Keystone Driller Company, and we will have that marked Defendant's Exhibit 95. Here is a certified copy from Toledo. I guess that would be better.

The Court: Let me see it. (Examining exhibit). All right. Go ahead.

Q. I show you a letter purporting to be addressed to the Clutter Contracting Company, dated March 16th, 1925, on the letterhead of the Keystone Driller Company, which is accompanied by an invoice and a shipping receipt and bill of lading, which already bears the mark Defendant's Exhibit 37, and ask you if you received those papers?

A. Yes, sir, I received the papers. I received the machine but not all of the invoices. Part of it was shipped to Arlington later.

Mr. Zane: We will go into that. These papers have been marked Exhibit 37, the first paper is a letter to Clutter Contracting Company, signed Keystone Driller Company, R. J. Bole, and the letter recites, "We beg to hand you herewith the following papers showing shipment of machine which you ordered some days ago." Then follows the statement of the bill of lading consigned to Clutter Contracting Company. "The outfit is coming forward as you will note on Pennsylvania, car number so and so, routed Pennsylvania, Central of New Jersey. We also en-

Exhibits B, C and D — Bernard R. Clutter

close invoice in duplicate as per agreement. This machine is shop #4218. We also enclose envelope containing skis for switch on engine. Kindly ac knowledge receipt of these papers so we will know they have reached you."

Q. Had you sent any money with this order of yours for the machine?

A. I don't remember that.

Q. Well, I show you Defendant's Exhibit 99, and ask you if you received that paper?

A. That is on April 14th. I think I did receive that.

Mr. Zane: Please mark this Defendant Appellant's Exhibit 99. It is out of this book and I will have to read it.

The Court: I have a copy of it here.

Q. Now, this letter and this receipt are to the Clutter Contracting Company. Who was the Clutter Contracting Company?

A. I was trading under the name of the Clutter Contracting Company.

Mr. Zane: Shall I read this into the record out of this book, your Honor? It is just a short document and it will be convenient to have it in. (Reading) "Keystone Driller Company, Beaver Falls, Pennsylvania, New York, N. Y. Dated April 14th, 1925. We acknowledge receipt of your remittance as follows: by check #381 to apply on excavator as billed March 9, 1925, amount received $500.00. Discount, blank; interest, blank; total credit, $500.00." That is Defendant Appellant's Exhibit 99.

Q. Now, Mr. Clutter, after that first conversation with Mr. Downey which you have testified to, did you have another conversation with him?

A. Yes, sir.

Q. Now, was that before or after you received these documents in regard to the machine, if you can recall?

A. My recollection is it was before.

Q. Did you at the time you received these papers, or before that, execute the papers in regard to the purchase of the machine, namely, the contract and the promissory notes?

A. Ask that question over again.

Q. I say, did you at any time sign the papers?

A. Yes, sir.

Q. Do you know when that was, whether before or after you received notice of the shipment?

A. I believe it was before.

Q. And one of those papers was a chattel mortgage, was it?

A. I think so.

Q. And the other papers were notes?

A. Notes, yes, sir.

Q. Promissory notes?

A. I think so.

Q. You signed those?

A. That is my recollection.

Q. Prior to that, you had a second conversation with Downey. Where was that?

A. That was there at the house, at our house.

Q. The same house in Lakewood?

A. Yes.

Q. And was he accompanied by anybody at that time?

A. Yes, he was.

Q. Who was that?

A. There was a man, I didn't know who the man was at that time; I didn't remember there was anybody except one man; there may have been another man, but I am not sure; I don't remember. I think it was just this one man with him.

Q. Did you ask Downey to come to see you, or did he come of his own accord?

A. No, he came of his own accord.

Q. Now, tell us what the conversation was.

A. Well, it was in regard to writing up, drawing up any writings, something that would—well, as he called it, "tie me hand and foot,"—so I had to keep quiet. That was the words that was used."

Q. That is what he said?

A. That was the words that was used.

Q. Go on now. Was that in the presence of this man with him?

A. He had the man with him, yes.

Q. Now, go on and tell us what took place.

A. Well, let's see if I can remember. He said we would have to draw up something to show that I had abandoned the machine in the Joplin experiment, which

he called it. I told him, I mentioned the fact I didn't abandon it, didn't intend to abandon it. Well, he said we would have to show that I did abandon it. It would have to be shown as an abandoned experiment. He told the man what to write. I don't know what it was; I can't remember the words of it. I remember the substance of it.

Q. Well, what did you say?

A. Well, it was up to him for to write it. He wanted to write up something that would protect him in case anything—he said he doubted the papers could ever be used, but in case they could, he wanted something to protect himself, and so he wanted to know about the different parts of the shovel, and if there was anything—I told him we were going to make a little change on the latch. Then he said "Your latch wasn't perfected." Well, I told him we would have to make a little change on it. Then he says: "It wasn't perfected or you abandoned it, for some reason of that kind." I don't remember the words, but that was approximately.

Q. Well, the latch, was that something that could be bought?

A. Oh, it was nothing difficult about making a latch to hook the bottom with. We were busy on our work there and we didn't take time to work it out. The work was only a month or such a matter.

Q. Were there any papers drawn up there?

A. Yes, sir.

Q. Do you know how many?

A. No, I don't remember whether there was more than one or not.

Q. Well, do you remember that you signed?

A. I signed one or more papers; I don't remember.

Q. Now, you mean this is at the second conversation?

A. This is the second conversation, the second time Mr. Downey came to Lakewood to see me in regard to this thing.

Q. Now, this paper which I show you purports to be a photograph of an affidavit. Look and see if that is the thing that you signed, and if it is your signature at the bottom of it? (Handing to witness)

A. That looks like my signature. I didn't read the papers that I signed there; that is not the language I would use if I was writing it.

Q. But that is your signature?

A. It looks like my signature, yes I think it is. I didn't know it was to be an affidavit at the time I signed the papers.

Q. You say Mr. Downey drew that up there?

A. Yes, drew some papers up there and I signed it.

Q. He and the man with him?

A. He and the man with him, and I signed some papers that he drew up, and I presume that was—the papers for the purpose of tying me hand and foot, and I presume that was the papers.

Q. Did you have a copy of this paper, was a copy given to you?

A. No, sir.

Q. Did you ask for one?

A Yes, sir.

Q. What did Downey say?

A. He said they couldn't have any copies out.

Q. Did he say why?

A. Well, he said at different times that any papers out would serve to invalidate, might serve, he said to invalidate the patent, to show there was a deal existing between us.

Mr. Zane: Has your Honor a copy of this paper?

The Court: Is that the agreement?

Mr. Zane: No, sir, this is the alleged affidavit.

The Court: Is it in here?

Mr. May: It is in Volume 4, on page 1319.

Mr. Zane: I would like to direct your Honor's attention in that paper to the description of the device put in there, the one used at Joplin.

Q. Now, I show you another document that is already marked Defendant's Exhibit 98, which is unsigned, and ask you if you at that second conversation saw this document? Or was it drawn to your attention?

A. I don't think I have seen that. I don't remember that.

Q. At least, that was displayed to you at that second conversation?

A. No, I don't remember that.

Q. And you have no other recollection of it?

A. Let me see it. (Examining paper) If it had been

there I would have signed it because I just signed the papers he put down in front of me.

The Court: Your answer is, then you have no recollection of having seen that paper?

The Witness: I have no recollection of having seen that paper.

Mr. Zane: Gentlemen, will it be admitted that this paper was drawn by Mr. Downey, and that this is his writing on the paper?

Mr. May: If Mr. Clutter never saw it, what does it matter?

Mr. Zane: It matters a great deal with regard to this testimony. But I asked you if you will

Mr. Richey: Mr. Downey is here. You can put him on the stand and ask him.

The Court: It has no connection with this testimony.

Q. Now, you were not furnished any copy of that kind of a paper or of that paper?

The Court: The one he just read.

Q. I asked you if you were furnished any copy of that paper or that kind of a paper?

A. No, I am sure I was not; in fact, I don't remember any.

Q. These papers that were not signed, did they have any connection in kind with the papers that you signed for the machine, the chattel mortgage and the promissory notes?

A. No, I don't think they had any connection with that. There were no papers at that time produced to me that I remember of. I am sure in my mind that I didn't see any paper of that kind.

Q. After that conversation with Mr. Downey, did you see him again in regard to this transaction?

A. The next time I recollect of seeing Mr. Downey was when I was building a piece of road up at Roseland.

Q. Where is Roseland?

A. I had a sub-contract there for excavation. It is in northern New Jersey, west of Newark, near Caldwell, New Jersey.

Q. You were working there on a job?

A. Yes, sir.

Q. Did Mr. Downey come to see you, or did you ask him to come, or did he come of his own accord?

A. My recollection is that Mr. Elmire came out to say something about taking the machine back. We was behind on their payments; I don't remember whether Rex was with him the first time or whether he went back and Rex came back with him the second time.

Q. Before that time you say you had fallen behind on your payments had you bought any other machine?

A. Yes, sir.

Q. Now, what machine was that?

A. I bought another Keystone excavator in the year 1925, later than this one.

Q. And that was a straight out trade?

A. Straight out deal, yes, sir.

Q. And you were using both excavators in your work?

A. Yes, sir.

Q. Now, did you fall behind on both machines?

A. Yes, sir.

Q. What was the cause of that?

Mr. May: Is that material, if the Court please, what the cause was? I object to it.

The Court: Sustained.

Q. Well, tell us what took place at that conversation with Mr. Downey. What was it about Elmire? You said something about him coming first.

A. My recollection is Howard Elmire came out first, talking about the company wanted to have to get a settlement or take the machines back. I told him they better be careful about taking that one machine away from me; that was the only thing I had to realize on, and until me and Rex had a if they would leave me alone for a little while until I could get straightened out I could pay for it. So Rex came out.

Q. How soon after that?

A. Quite soon, my recollection is, and when he was talking about taking the machine away I told him we had talked that there was a little plan. I told him he had better look out, he was fooling with fire. What I mean by fire—

Mr. Richey: Wait a minute. He can say what he said, but can he say what he meant?

The Court: Well, I am interested in knowing I would like to know what he meant by it. I assume he meant he had "the goods on him" or something like that. Is that what you had in mind? You knew you had done something wrong, is that it?

The Witness: No, this is what I meant. Rex really had something I felt he was only holding by me keeping quiet, and I didn't feel he got it justly, and I felt if I gave my information out he would not be benefited.

The Court: So you were threatening him, is that it?

The Witness: No, I didn't mean it as a threat.

The Court: Well, what did you mean by "playing with fire"?

The Witness: Well, if I was questioned about it—

The Court: You weren't going to wait to be questioned, were you?

The Witness: I don't know whether I was or not. I was really trying to bluff him into leaving the machine with me until I could pay for it, as near as I can remember.

The Court: Well, go ahead.

Q. Tell us all that was said in that conversation.

A. Rex said he didn't want me to feel that way about it.

The Court: Give us the best of your recollection the substance of your conversation, what he said and what you said.

The Witness: I told him how I felt about it and he told me—

Q. Oh, begin at the beginning now. Go back in your mind to what took place, when he appeared on the scene and what did he do first. Was it something about taking back the machine?

A. He said the company was complaining very much; the notes were overdue, and something would have to be done about it; I would either have to raise some money right away or they would take the machines. And I told him I didn't see how I could raise any money, that

I wasn't getting the money out of those people, and things were in such shape I didn't see how I could raise it right away, but if he would leave me alone I would be able to pay him every cent.

Q. Did you tell him any reason why he shouldn't take the machines from you?

A. I told him then I would have lost all opportunity to realize off of my invention. Well, he said "Let's get together and work out something," or something to that effect. I don't remember the exact words. But we went over this thing together, and he decided he should pay me a cash proposition, and he offered to give me half the amount of cash that was really to have been allowed on the machines. So there was a parts account, which he thought was much higher. It actually proved to be, after we had gone over the thing and found how many parts we actually had to buy for those machines, which was comparatively new,—in fact, I think he was somewhat astounded himself, by his actions, and he agreed to cut the parts account in two, that is, fifty percent. He figured those out. Then he found the attachments I had ordered with this machine that I was to have a half interest in had been shipped to Arlington, and that I had never gone and got them. They were new and not damaged in any way, and of course I was entitled to a credit on those attachments. I don't remember just what credit he arrived at I should have on those; I am not sure; but when it was all done it was really $3808.00, to my recollection, due me as a credit on the machine.

Q. As half of it do you mean?

A. That is half of it, yes. That would have been due me as a credit.

Q. As a cash proposition?

A. As a cash proposition.

Q. Instead of a credit on the machine?

A. Yes. That is, half of $3808.00 was to be due in cash in place of $3808.00 due as a credit on the machine, which was $1904.00, and in talking over this he said, "Now, that will be nearly two thousand dollars that you will get." We figured it out and it was $1904.00 to be exact. That is my recollection.

Q. Well, when would that be paid?

A. Well, my understanding is it was after they had gotten the machine in and disposed of.

Q. That $1904.00 would be coming to you in cash?

A. In cash; yes, sir.

Q. That is what you talked over with him?

A. Yes. But later I tried to collect the $1904.00, and I wrote Rex several letters. He decided it should be cut off in two again. Then he cut it in two again; he got it down to $476.00, I believe.

The Court: Do I understand the machine was taken away?

The Witness: Yes, the machine was taken away.

Q. And did you receive any notice of the company having sold the machine, this particular machine that they had taken away from you?

A. No, I didn't receive any notice.

Q. Now, the credit of $1904.00 you say was first cut in two by him?

A. $1904.00 was not a credit. The $3808.00 was the credit I should have had, and the $1904.00 was the cash proposition that we arrived at.

Q. Cash for the credit?

A. That was the cash; that was to be the cash proposition.

Q. And the credit still remained?

A. No, if they took the machine back I was to have $1904.00 in cash.

Q. Now, did any letters pass between you and the Keystone Driller Company regarding this matter?

A. Yes, I wrote to Rex Downey several times.

Q. When was this transaction that took place at Roseland, New Jersey; what year?

A. That was 1927.

Q. What time in the year?

A. In the spring of the year.

Q. Can you come any closer than that to it?

A. Well, it was possibly April or May. I can't hardly remember just what time it was. I think it was along about that time.

Q. Now, before that time, did you receive any letter from Rex Downey? Do you remember that conversation in regard to the Joplin machine? Do you remember any?

A. I don't remember whether I did or not.

Q. Let me show you this document, Defendant's

Exhibit 27, it is marked, and ask you whether you remember receiving that letter?

A. Oh, yes, I remember this letter. I remember that letter.

Mr. Norman: That is already in. It is a part of the first Clutter deposition.

Mr. Zane: I want to direct your Honor's attention to this letter of February 20, 1926. It is an inquiry of Downey in regard to the Joplin machine.

The Court: Is it in the book of exhibits, Volume 4?

Mr. May: Volume 3, page 221.

Mr. Zane: It has a notation on it here, in the facsimile in Downey's handwriting. "Now, doggone it, Buen, come across."

The Court: All right. Go ahead.

Q. Now, was there any talk with Mr. Downey in regard to cancelling any of the notes that were on that machine?

A. Yes, sir.

Q. Well, what was that? When was that?

A. A little while before they took the machine back.

Q. When did they take the machine back?

A. They took the machine back in the early part of 1927. That is my recollection.

Q. Can you tell us what that conversation was?

A. Well, I have told you, as I understood, just what the conversation was between me and Rex at Roseland, if that is the conversation you mean.

Q. Well, let me show you a letter and ask you if you received that letter? (Handing to witness)

A. Yes, I remember receiving that letter.

Mr. May: Which letter is that?

Mr. Zane: It is the paper already marked Defendant's Exhibit 103, and I will ask to have that paper marked Defendant Appellant's Exhibit 103, and we offer that in evidence. The paper, your Honor, is dated January 15, 1927, addressed to Mr. B. R. Clutter, Edgewood Court, Lakewood, New Jersey. "Dear Sir: In connection with the arrangement about credit on the first machine purchased from us in connection with the patent litigation, would say that we have received from Beaver Falls infor-

nation that they have cancelled four of your notes due, respectively, in September, October, November and December of 1926, the amount in all $1700.00. We are now handing you these notes herewith properly cancelled. It is the writer's understanding that in case of the successful issue of our litigation there will be a further credit. This, of course, cannot be given until the cases have been decided. Yours very truly, Keystone Driller Company, by Credit Manager."

Q. Now, prior to that time, had you written a letter to Mr. Downey about the money that was coming to you? Look at that letter of January 9th. (Handing to witness)

A. This is January 9, 1928.

Q. Oh, it was after that?

A. Yes, this is after that.

Q. Did you write that letter?

A. Yes, I remember the substance of it. I wrote that letter.

Q. This letter seems to bear a notation of Mr. Downey's. You know nothing about that notation, do you?

A. No, I never seen that before. I don't remember ever seeing it.

Mr. Zane: Please mark the letter without the notation, Defendant Appellant's Exhibit 104. That is offered without the notation. Unless you want to admit Downey made that notation in that letter.

Mr. May: We will admit that.

Mr. Zane: All right, then we will offer the whole thing, notation and all.

Q. I show you a letter purporting to be addressed to yourself from the Keystone Driller Company. It has already been marked Defendant's Exhibit 105. Did you receive that letter?

A. Yes, sir.

Mr. Zane: We offer that in evidence as Defendant Appellant's Exhibit 105.

Q. Did you answer that letter?

A. I think I did.

Q. I show you Defendant's Exhibit 106 and ask

you if you wrote that letter in reply to that former letter?

A. Yes, sir.

Mr. Zane: Has your Honor copies of these letters?

The Court: Yes.

Mr. Norman: Page 1310 of Volume 4.

Mr. Zane: I offer this as Defendant Appellant's Exhibit 106.

The Court: Of course, this is long after the trial of the case, long after any question of suppression is concerned, as far as the trial of this case is concerned. It was tried in 1927.

Mr. Richey: September, 1927.

The Court: This is a year afterward.

Q. I show you a paper, a letter that has been marked Defendant's Exhibit 107, and ask you if you received that letter? (Handing to witness.)

A. Yes, I received that letter.

Mr. Zane: This letter, your Honor, we have no copy of it, and I will have to read it in the record. It is in the Court of Appeals' record in the General Excavator Company versus the Keystone Driller Company, volume 4, page 1311. It reads as follows: "Lakewood, New Jersey, February 16, 1928. Mr. Burn R. Clutter: Upon receipt of your letter of February 6 we wrote to Mr. Elmire to see whether he remembers the deal the same way that the writer does. We now have reply from Mr. Elmire in which he says that as he remembers it the understanding was that if he had to take back the first machine, and if anyone of the three things mentioned in the third paragraph of our memorandum should occur within the time limit, then a cash payment of something less than $1,000.00 was to become due. This agrees with the writer's recollection, namely, that if the machines had to be taken back and the contingency of payment should occur, then we were to pay in cash half of the amount which would have been due as a credit against machine price. (Which credit was determined to be $1904.00, making the contingent cash payment $952.00.)

"So that is the status of our deal at the present time. No one of the three things mentioned in the memorandum has happened as yet. Now, however, although you must not think that we make any offer on account of the suggested awkwardness of an examination of your accounts in any bankruptcy proceedings, for you have no actual property or credit in this contract at the present time, and therefore there is nothing in this to be listed among your assets, we now make this offer in modification of the original deal, or rather in substitution for the original deal, in view of the uncontemplated development which has occurred, namely, that we have taken back your machine:

"The contingent credit of one fourth of the purchase price of your first machine, viz. $1904.00, is displaced in the deal by a contingent cash credit of $952.00, and the verbal extensions of the time in which the contingencies named in paragraph 3 may occur with effect are hereby confirmed and further extended to the end of the year 1928; although none of these contingencies has occurred at date of this writing, we now offer in consideration of the above to now pay you half of the contingent cash sum, viz, $476.00, leaving the second half of the $476.00 cash contingent upon the development of the ditcher situation. We enclose check covering amount as offered above, which please return in case offer is not accepted.

"Now, this is the best we can do, Burn, and we certainly hope that the cash will help you out in the present circumstances. Yours truly, Keystone Driller Company."

Q. Did you receive this check that I show you, and cash it?

A. I received a check for that sum and cashed it.

Q. And deposited it? That is your signature on the back?

A. Yes. Let me see it again. (Examining document.) That is my endorsement.

Mr. Zane: We offer that check in evidence as Defendant Appellant's Exhibit 108.

Exhibits B, C and D — Bernard R. Clutter

Q. I show you a letter that has been marked Plaintiff's Exhibit C, but is also marked Defendant's Exhibit 109, and ask you if you sent that letter? There is the facsimilie.

A. Yes, sir.

Mr. Zane: This is Exhibit 109, your Honor, and is in that list somewheres. I wish your Honor would notice whether on the Exhibit 104 it has got printed on it annotations of Mr. Downey.

The Court: Yes. Exhibit 104 appears to be a letter to Downey from Clutter and the notation is incorporated.

Mr. May: Page 1303 is the notation Mr. Zane is referring to, up in the left hand corner.

The Court: Well, I assume that is what it is, but it is rather poorly printed.

Mr. Zane: And then the endorsement on the middle of the letter in Downey's handwriting, "See over," and then the endorsement at the end somewhere.

Q. Do you remember receiving a letter like that from Mr. Downey, signed for the Keystone Driller Company? (Handing to witness.)

A. Yes.

Mr. Zane: We offer this in evidence as Defendant Appellant's Exhibit 38.

Q. I show you another letter and ask you if you wrote that letter to Mr. Downey?

A. Yes, sir.

Mr. Zane: We offer this in evidence as Defendant Appellant's Exhibit 110. Have you there, your Honor, a facsimilie of Defendant's Exhibit 39?

The Court: It is printed here, a letter from Keystone, Downey to Clutter, 12-4-28.

Mr. Zane: Has it got the notation on of Downey, or annotations?

The Court: None up here in the books.

Q. I show you a letter and ask you if you received that?

A. Yes, sir.

Mr. Zane: This letter we offer in evidence as Defendant Appellant's Exhibit 39. That is page 244 of the printed record.

Mr. May: I was just wondering about Mr. Zane's question about notations. That letter was in Mr. Clutter's possession. We haven't had that letter. There couldn't be any notations on the letter if it was in Clutter's possession.

Mr. Zane: All I know it is in the record, and we can't get a photographic copy or any other kind of a copy. The original is down at Toledo; we probably could get a photographic copy there.

The Court: The point you make is there is no relevancy to the notation because it is a Clutter letter.

Mr. May: I couldn't understand the force of his comment. Mr. Downey couldn't have made any notations on that letter.

Mr. Zane: No, I was using language without thorough reflection when I was asking about notations.

Q. Defendant's Exhibit 111, look at that facsimile of that letter and see if you wrote that? (Handing to witness.)

A. Yes, that is my signature.

Mr. Zane: We offer that in evidence as Defendant Appellant's Exhibit 111.

Q. I show you a letter which is marked Defendant Exhibit 40, and ask you if you received that letter from the Keystone Company signed by Mr. Downey?

A. Yes, sir.

Mr. May: That is on page 246 of Volume 3.

Mr. Zane: We offer that letter as Defendant Appellant's Exhibit 40. Now, your Honor, in connection with a letter sent by Mr. Downey, we offer in evidence this unsigned contract form to show the document that is quoted from and the paragraphs referred to in that letter of Downey. It is marked already as Defendant's Exhibit 98, and we offer it as Defendant Appellant's Exhibit 98.

The Court: We will suspend at this time until 1:30.

Thereupon an adjournment was taken until 1:30 o'clock P. M., same day; whereupon the following proceedings were had:

Thereupon the witness, BERNARD R. CLUTTER resumed the stand for further examination, and testified as follows:

Mr. Zane: We have finished our direct examination.

CROSS EXAMINATION by Mr. Richey:

Q. Mr. Clutter, when did you first go to work for the Keystone Driller Company?

A. I think it was in 1914.

Q. And how had you been employed before that?

A. I was working at one of the trial machines on a contract basis with my brothers; my brothers and I.

Q. And where was that?

A. That was up at Wildwood, New Jersey.

Q. What kind of a machine was that?

A. That was one of the first three machines they put out.

Q. One of the Keystone machines?

A. Yes.

Q. And what had you been doing before you went to work on that machine?

A. I was in the automobile business.

Q. How long did you work for the Keystone Company when you went to work for them in 1914?

A. Approximately five years, or something like that.

Q. Up until about 1919?

A. Up until right near that. That is my recollection. It may have been the late part of 1913.

Q. Late part of 1913?

A. Yes; as I was working with the trial machine for the accomplishment of the Keystone, but really under contract and not directly for the Keystone Company.

Q. Well, what did you do when you quit their employ?

A. We went into the coal business out at Caney, Kansas,—Mr. Taylor and I.

Q. How long did you continue in that business?

Exhibits B, C and D. Bernard R. Cutter

A. Until we were flooded out and fought water as long as we had any money left.

Q. That is, that business failed, did it?

A. That business failed.

Q. Then you went to work for Wallower Brothers, didn't you?

A. Yes, I went to work after that for Wallower Brothers.

Q. How long did you work for them?

A. I don't remember just how long we went to work in the Orange company mine and one of the other mines. We took two shovels down in this open mine and we worked until the water flooded them out and they had to take their machines out.

Q. I just asked you how long you worked for them.

A. I don't remember just how long; approximately, I would say, maybe six months and maybe five months or seven months.

Q. Then they went out of the contracting business, didn't they?

A. Yes, sir.

Q. And then the Keystone Company recommended you as an operator for the South American people, is that right?

A. No, after I had been with the Wallower people I took a contract for loading cinders on the Missouri Pacific Railroad. I went over there and worked with the the car situation was such that the company was unable to furnish me cars to keep the thing running, and after loading sometimes one and two cars once in a while we would get maybe twelve or fifteen cars. I had to give the proposition up.

Q. Was it then that the Keystone recommended you as an operator?

A. Yes, sir.

Q. And then when you came back they recommended you again to the people in Massachusetts as an operator?

A. No; they sent me up in Massachusetts to demonstrate a machine up at North Dighton, but on account of the boiler failing to pass some new law they had put in effect up there, as I understand it, they wouldn't let me start the machine until certain changes were made, and I came back to Newark. I was working for Chapman.

Q. And the Keystone recommended you as an operator, didn't they, to Mr. Chapman?

A. Yes, sir; in fact, I asked him to show me where I could get a job as an operator out East. I didn't want to go back West.

Q. And the Keystone got the job for you?

A. The Keystone told me they had several operators out for Mr. Chapman, and he sent them all back and they asked me to go.

Q. Then you went in business for yourself after that, did you?

A. Yes, sir.

Q. You went along in that business until you got into financial difficulties, didn't you?

A. Yes, sir; I went on until

Q. That was when you couldn't make payments on these two machines?

A. Yes, sir.

Q. And then was when you asked the Keystone Company to help you out again, that is correct, isn't it?

A. No, I don't remember as I asked them to help me out again. I asked them to carry the one machine along until I could pay for it, but I don't remember as I asked them to help me out in any way, unless you refer to after we failed.

Q. Didn't you write to Mr. Hez Downey on January 9, 1928, to the effect that you were in dire need of funds, and were sure he was the one that could help you out, and now was the time to do it?

A. I misunderstood your question. I thought you meant to help me out when the business was failing. But this was after the business had failed and they had taken back the machines. It wasn't really to help me; it was to give me what I thought was justly coming to me. That I had reference to.

Q. You are acquainted with Mr. V. C. Smith, who is here in the court room, aren't you—V. C. Smith back here?

A. Which man do you mean? This man next to Mr. Downey?

Q. That man standing up back there. You are acquainted with him, aren't you?

A. I don't know.

Q. In a couple of letters you referred to "Mr. Smith" who was trying to collect this money from you.

A. That is this other Mr. Smith I have reference to not this Mr. Smith.

Q. You never saw this Mr. V. C. Smith?

A. I won't say I never saw him; maybe I did. I mean this Mr. Smith here that has been book keeper for the Keystone Driller Company.

Q. Didn't Mr. V. C. Smith come to you a number of times to collect this money from you on these machines?

A. I don't remember as he did.

Q. Along in 1926 and '27?

A. He possibly may have; I don't remember that he did; maybe he did.

Q. Came out of the New York office of the Keystone Company?

A. Yes, maybe he did; I won't say that he didn't.

Q. Isn't he the man that repossessed these machines?

A. I don't know. It was really agreed after the cash proposition was agreed upon.

Q. No, I asked you if he is not the man who repossessed the machines?

A. I can't say that he is.

Q. Who actually took the machines from you?

A. The agreement was entered into

Q. No; who was it?

A. I don't know who come and got the machines.

Q. You weren't there when the machines were taken?

A. I am sure I wasn't there when they come and got the machines. I know they was coming and one machine was put out on the road for them so that they could get to it. I don't know who was actually the one that came and got them.

Q. Was Mr. V. C. Smith ever in your home?

A. He may have been; I don't know whether he was or not.

Q. Were you ever in his home?

A. I don't remember; I don't remember this man V. C. Smith. I don't know; maybe he has changed his appearance or something; I don't remember the man. I won't say he wasn't in my home.

Q. Didn't he come to you in October or November, 1926, and tell you that you would have to pay up on those

machines or the company would have to take them away from you?

A. He may have.

Q. And didn't he come again a little later than that and tell you the same thing?

A. I wouldn't say whether he did or not; I can't remember.

Q. And didn't he finally come to you and tell you that they were going to take the machines away from you, and then you made this threat to him about disclosing something about Joplin, and he told you to tell anybody you wanted to tell about it? Didn't he tell you that?

A. My recollection is that Mr. Elmire came out to

Q. I am asking you about Mr. Smith. Didn't Mr. Smith tell you that?

A. I don't remember that.

Q. You don't remember that?

A. No, sir; I do not.

Q. Well, do you remember an instance when Mr. Smith and your brother Bird Clutter were looking at one of these Star machines?

Mr. Zane: When was this?

A. In Newark, it was.

Q. At what place in Newark, may I ask?

Mr. Zane: Are you talking about the brother, or what? I can't get your connection.

A. If I can get something to refresh my memory—

Q. Why, it was about the junction of Smithfield Avenue and the road that turns off to Irvington.

A. I remember when there was a Star machine out there, and I seen different people out there, and possibly Mr. Smith may have been one of them.

Q. Well, your brother, Mr. Bird C. Clutter was there, wasn't he?

A. Yes, he was there.

Q. When was that?

A. I don't remember when it was.

Q. About April, 1927, wasn't it?

A. Well, I presume it was along there when Bird had the machine out there.

Exhibits B, C and D . . Bernard R. Clutter

Q. At that time you discussed with Mr. Smith and your brother the Star machine, and also this Joplin work, didn't you the Joplin machine?

A. Well, possibly I did; I forget; possibly I did; I wouldn't say that I didn't. I don't remember whether I did or not.

Q. Your brother Bird was living at your house at that time, wasn't he, or staying with you?

A. He stayed with me there a while, but there was part of the time he didn't stay with me. I don't remember whether he stayed with me that time or not. He was stopping up at Newark at a hotel on North Broad Street a good bit of the time when he was working around Newark, and I don't remember at this particular time whether he was staying with me or not.

Q. Well, do you remember talking to him about this Joplin machine and the work done out there with it, at any other time, that is, talking with your brother Bird C. Clutter?

A. Well, we have talked this over at different times, but that particular time I don't remember. It just came up for discussion at different times.

Q. When was the first time you talked to him about it, do you remember?

A. No, I don't remember when.

Q. How often did you talk to him about it?

A. Well, I don't remember that.

Q. He knew about it, that is, you told him all about it, didn't you?

A. He knew about it; in fact, he knew about it before that.

Q. You talked to him about it before that time?

A. Yes, sir.

Q. Did you talk to him about it after that time?

A. I don't remember. I am sure we must have talked about it after that time.

Q. You also talked to your other brothers about it, didn't you,—Leroy Clutter?

A. Leroy Clutter and B. C. Clutter, I presume, at the same time. At the time that Mr. Downey and I entered into this arrangement the question came up, in fact, I brought the question up, as to whether our entering into this deal would in any way affect the Star company with their shovel, and Mr. Downey told me I didn't need to fear that; that was farthest away from it; and

I have talked that over with Roy and Bird Clutter, my brothers, and explained to them just what had been said in regards to their shovel, and what Mr. Downey had told me.

Q. I suppose you told them afterwards what Mr. Downey said about it, did you?

A. I presume I did.

Q. That would be between the time you signed that affidavit in 1925, between that time and 1929, wouldn't it?

A. Possibly.

Q. What is the nearest to the 1925 date you can place a conversation with either one of your brothers, Bird C. Clutter or Leroy Clutter, about the Joplin machine?

A. Well, I can't give you any thing on the date, but it was after Rex Downey had come to me at Lakewood in regard to entering into a deal. The facts of the matter was I felt I had lost all opportunity to realize anything out of my invention.

Q. You must have told them within the year, didn't you, because the thing they were interested in was as to whether they thought the Star would be free or not?

A. Well, I presume it was; I would judge it was within the year.

Q. You also had another brother named Lester that was working with you down at Lakewood, didn't you?

A. Yes, sir.

Q. Did you tell him about this Joplin machine, the Joplin work?

A. I don't remember whether I did or not.

Q. You saw him from day to day, didn't you?

A. Yes, sir; he worked for me.

Q. Did you tell him anything about Mr. Downey being down there and making this arrangement with you?

A. Now I don't remember whether I did or not. I possibly may have.

Q. That is, you wouldn't say you didn't talk to him about it?

A. I wouldn't say I didn't or I wouldn't say I did. I don't remember about discussing it with Lester Clutter. I do remember B. C. and R. P., my older brothers. At a later time after that we did discuss it in regard to informing them as to what Rex had told me in re-

gard to me being safe to sign the deal, as far as them being in danger of being interfered with.

Q. Do you remember that a conversation took place, a conversation where you told your two brothers about the deal you say you made with Mr. Downey?

A. No, I don't remember where that took place.

Q. Did you talk to Mr. George Wagner about it at any time?

A. At some time later, considerable time later than what I talked to Mr. Wagner.

Mr. Zane: Wait a minute. We want to object to that, your Honor. It is long after this suit was brought and decided.

The Court: Well, the trouble is that much of your correspondence occurred after the suit was filed. I suppose that has some bearing on those letters which you introduced here.

Mr. Zane: Yes; but the fact that he talked after this suit was decided about this deal is not

The Court: Oh, no, that would not be helpful in disclosing the information, if that is what you mean.

Mr. Richey: Well, read my question. (Last question read by the reporter.)

A. Yes, I think I did.

Q. When was this?

A. I don't remember just when that was.

The Court: Well, was it prior to September, 1927?

The Witness: No, I think it was later than that; that is my recollection.

Q. Was it prior to 1929?

A. I can't remember when I talked to Mr. Wagner about it.

Q. Well, didn't Mr. Wagner tell you that he had been threatened with infringement under these patents?

A. Yes, sir, that they had been warned about infringements, and my recollection is that is when we went into the proposition, and I explained to Mr. Wagner the understanding I had from Mr. Downey.

Q. And told him about the Joplin machine and the Joplin work?

A. Yes, sir, as I remember. I told him part of it, but I don't remember just how far we went into it at that time.

Q. Wasn't that in the fall of 1928, to refresh your recollection?

A. I can't remember when it was.

Q. It was prior to the time you heard of Judge Jones' decision in this Byers case, wasn't it?

A. I don't believe I knew about what the judge's decision was until sometime after the trial.

Q. Now did you talk to anybody else about this Joplin work or Joplin experiment between the time that you did the work out there and the fall of 1927, than those, you have named?

A. I don't remember whether I did or not.

The Court: I didn't hear distinctly who you said you talked with at Joplin when you were out there.

Mr. Richey: Yes, a Mr. Oliver. He is here in the court room.

Q. Did you ever talk to Mr. J. W. Matthews about this Joplin machine and Joplin work?

A. J. W. Matthews? Yes, sir.

Q. And when was that?

A. That was during the time we was getting the machine. Mr. Matthews at that time was talking about going in with me; that is, talking about forming a partnership or a stock company, and I informed Mr. Matthews about the advantage we would have on one of our machines, that we would get a percentage off. Mr. Matthews is a confidential man, in fact, a son-in-law of one of the family.

Q. Will you take down your hand?

A. (continuing) Mr. Matthews is my son-in-law. He is assistant cashier in the People's Bank—

Q. Now that I have refreshed your recollection about Mr. Matthews, can you think of any body else that you talked to about this Joplin machine or Joplin work prior to September, 1927?

A. No, sir.

Q. You wouldn't say there weren't others, would you?

A. No, I wouldn't say; I don't remember talking.

Q. And you wouldn't say there were others that you talked to about if between April, 1925 and September, 1927, would you?

A. I don't remember of talking to anyone.

Q. But you wouldn't deny that there are others?

A. Well, I wouldn't say whether I did or not; I don't remember of talking to anyone.

Q. Joplin is a town of about 35,000, or was in 1920, wasn't it?

A. Approximately that, to my recollection.

Q. And this Joplin machine and this Joplin work you did was done out in the open where any body and everybody could see it, wasn't it?

A. Yes, sir.

Q. It was close to the postoffice?

A. It was on the street—Third Street. I forget just where the postoffice is.

Mr. Zane: If your Honor please, I would like to make an objection here. As I understand the order of the Circuit Court of Appeals, they have passed upon the question of our diligence, and they have passed upon the question of this being newly discovered evidence, and therefore this examination, which is apparently in that line, is not cross-examination of this witness, and is the taking of evidence upon an issue that is not here at all.

The Court: Of course this issue is limited to the question of whether this plaintiff, the plaintiff in our case, suppressed this evidence. That is all we are considering here.

Mr. Richey: It is two questions. The question is whether the patent is invalidated by this use, and, second, whether the suppressed evidence—

The Court: You show me where that is.

Mr. Richey: I have dug out some of these things. Here is the bill of review referred to in that stipulated order, and this is addressed to the lower court in Mr. Zane's bill of review. "Wherefore the plaintiff prays that the said final decree of the said district court, after hearing the . . . bill of review, be held to be erroneous, and it ought to be reviewed, reversed and set aside, that it may be decreed that the said patent is invalid and null and void." That is addressed to the lower court; but your Honor,

this testimony here is addressed directly to the question of suppression. These people claim my client undertook to suppress something that was done out on the street where hundreds of people saw it every day, and it was a matter of common knowledge in that town and a matter of interest.

The Court: I realize it is not the question whether they attempted to suppress it as the question, did they suppress it. Of course if the information was available, even though these people thought they were suppressing it, it has not been suppressed. I think I will permit him to ask, and you may have an exception.

Q. The postoffice was directly across the street, wasn't it, from the place you were doing this work?

A. We were on Third Street. I can't remember just where the postoffice is. Possible it is right across the street.

Q. Well, there were hundreds of people came along there every day and looked at your working with this machine on that work, weren't there?

A. Yes.

Q. Mobs along there all the time, just like you see on the streets in any city where an excavation is going on?

A. Yes, sir.

Q. And you knew some of those people, didn't you?

A. Yes.

Q. Some of them were contractors and also operators?

A. There weren't so many contractors there: I don't remember whether there was any contractors there or not. There was the Keystone people from their branch up and down most every day.

Q. The Keystone Company had a western branch there at Joplin, didn't they?

A. Yes, sir.

Q. And they are the people that changed this machine over, weren't they?

A. Yes, sir.

Q. They did the work on it?

A. They did the work on it.

Q. Their people did the work on it?

A. Yes, sir.

Q. So their people were familiar with the details of construction and the change, weren't they?

A. Well, they must have been because they built just what I told them to build.

Q. Yes; Mr. Wallower was also familiar with those details, wasn't he?

A. Yes, sir.

Q. Mr. Oliver was close to the work all the time, wasn't he?

A. He was back and forth.

Q. And knew about it?

A. He knew about it; yes, sir.

Q. There was nothing concealed or secret about it, was there?

A. No, not at that time; not at that time.

Q. You have spoken of Mr. Elmire. Haven't you told Mr. Elmire about this Joplin machine and the work?

A. Yes, sir, I think so.

Q. When was the first time you told him about it?

A. Well, I believe I told Mr. Elmire, I think we talked about it—I don't remember when the first time was that we talked it over.

Q. Well, it was prior to 1925, wasn't it?

A. I don't remember.

Q. Well, you remember that you did talk to him after 1925, don't you?

A. Not for quite a while after 1925.

Q. But prior to 1927?

A. Well, possible it was along about that time.

Q. And at that time you told him it had been abandoned, didn't you?

A. No.

Q. You told him it was an experiment and had been abandoned?

A. No.

Q. You didn't tell him that?

A. I don't remember telling anybody it had been abandoned. The word "abandoned" entered into this case only when Mr. Downey was writing up something at my place.

Q. All right. It hadn't been entered into then; then it was in the case, and after that you told Mr. Elmire it had been abandoned, told him that on several occasions?

A. No, I don't remember telling him it was abandoned.

Q. You deny you told him that?

A. I don't remember telling him that.

Q. You don't deny you did tell him that?

A. I think I would remember, because the word "abandoned" was used for a particular purpose in that paper that Mr. Downey got out.

Q. Well, you told him it was an unsuccessful experiment out there, then?

A. No, I don't know why I should tell him that because it worked much better—

Q. I asked you whether you told him that?

Mr. Zane: Let him answer.

Q. I don't want your conclusion about it.

A. I don't think I told him it was abandoned. I don't see why I should tell him.

The Court: Don't give your reason. The question is whether you did or didn't.

A. I don't remember. I don't believe I did.

Q. You said that Mr. Elmire and Mr. Downey came to your house in Lakewood, New Jersey on this first trip; that is correct, isn't it?

A. Yes, sir.

Q. How many rooms have you on the lower floor of that house?

A. Three.

Q. What room did you three sit in?

A. Sitting room.

Q. Then there was a dining room, wasn't there?

A. Yes, sir.

Q. And your story is Mr. Downey called you out in the yard and you left Mr. Elmire in the house?

A. That's right.

Q. And he just sat there in the house while you all wandered about the yard?

A. That's right.

Q. Where did you go when you were out in the yard?

A. Just walked out and strolled down across the front of the yard—

Q. How long were you out there?

A. Well, I don't know; I suppose not longer than a half an hour; maybe less than that.

Q. How did they get to your house?

A. They came by car, I believe.

Q. Whose car was it?

A. My recollection is it was Mr. Elmire's car, if I am right on that; I am not sure about that; I am not positive they came by car, but my understanding is that they did; that is my recollection.

Q. How wide is your lot at the front?

A. A hundred feet.

Q. You said something about Mr. Downey said it wasn't suitable to draw up an agreement there. Didn't you have a typewriter there you could have drawn it up on?

A. No, I don't think we had any typewriter there at that time. This is the first visit, you mean, of Mr. Downey's?

Q. Yes.

A. No, there was no typewriter there; I am sure we didn't have any at the house. Now we may have had, but I forget about that. I had a typewriter there but I think it was after that.

Q. What kind of a typewriter was it?

A. I couldn't tell you.

Q. You don't remember?

A. No.

Q. How long did you have it?

A. Well, I don't remember how long we had it. We had it until after I went broke, and the fellow that had been my book-keeper come and borrowed it and didn't bring it back.

Q. How long after that was it you got this typewriter?

A. I don't remember whether this was after that I got it or before. I think it was after that.

Q. You don't remember how long after?

A. I think it was sometime in the summer, if I remember right.

Q. What summer?

A. Of 1925.

Q. Did you operate this typewriter?

A. No, sir.

Q. Who at your house did operate it?

A. A man by the name of Powers.

Q. Did he live with you?

A. No, he was my book-keeper.

Q. And you don't remember what kind it was?

A. No, sir.

Q. Now at this interview when you executed this affidavit, you said Mr. Downey wrote the affidavit up there in your house, didn't you?

A. I said they wrote up some papers there. I don't know exactly what the papers was, but I remember some of the things that was brought out, and one of the things was the abandonment.

Q. That paper was written up there, the one with the "abandonment" in?

A. Anyhow, that word was used in talking over some stuff they was writing.

Q. Tell me whether or not that paper with the "abandonment" in it was written up in the house or not?

A. No, I can't tell you that; I don't remember where it was; but I remember one conversation that word came up.

Q. All right. What papers were written up there in the house on the typewriter?

A. I don't remember.

Q. Who wrote them up?

A. I think it was this man that was with Mr. Downey.

Q. What is his name?

A. I don't remember his name.

Q. Wasn't Mr. Elmire there at the time?

A. He may have been. I won't say whether he was or not; I don't recollect.

Q. Do you know Mr. John L. Burdge?

A. Yes, sir.

Q. How long have you known him?

A. Possibly about five, maybe around five years, I presume.

Q. You know him prior to 1925, didn't you?

A. No, I don't think so; no, I didn't know him prior to that time.

Q. When did you first become acquainted with him?

A. When the man came to the house with Mr. Downey I see his name was Burdge at that time; I didn't know who the man was at that time, that Mr. Downey brought there, but I know Burdge since that time.

Q. What is his business?

A. He is a clerk in the sheriff's office there at the present time.

Q. Was he in the garage business at one time?

A. He may have been; I don't know; I didn't know if he was in the garage business.

Q. When did Mr. Downey bring Mr. Burdge to your house?

A. Well, that must have been the latter part of February. It was after this first conversation as to whether or not there could be any writings in regard to holding me.

Q. Did you ever get any licenses for your White trucks from Mr. Burdge?

A. I couldn't tell you about that; I don't remember who I got the license from; I got the license undoubtedly from the state, and who was the clerk in the office, I can't tell you.

Q. You swore to this affidavit before Mr. Burdge, didn't you, at the time you signed it?

A. I signed the papers and he put on his signature there. I have no recollection of any oath being taken; in fact, I am sure there wasn't.

Q. You are sure you didn't take an oath?

A. No, I say I have no recollection of it; I am quite sure I didn't in my own mind. I feel very sure, as nearly as I can recollect, just what took place was—when they got through they said, "Now, here, you can sign this." I signed it. Mr. Downey went up to get out the door; this man got up; I thought he was pinching these papers together with one of these riveting machines; and Mr. Rex went out the door; he said, "Now understand, there is an affidavit in these papers."

Q. What did you say to that?

A. I didn't say anything. After he was gone my wife asked me, "What did he mean by an affidavit?" And I said, "That is what I am thinking." That's the words that was used.

Q. Well, you didn't protest when he told you it was an affidavit, did you?

A. Well, it didn't dawn on me just what he had reference to. I didn't understand what he had reference to,—there was an affidavit in those papers.

Q. You didn't understand what an affidavit meant?

A. I thought you had to hold up your hand and swear when you were making an affidavit.

Q. Well, he told you it was an affidavit?

A. Just as he was going out the door. He said, "You understand there was an affidavit in those papers."

Q. And you acquiesced in it; that is, you didn't oppose it?

A. Well, I didn't understand it just thoroughly; it didn't dawn on me just what he had reference to then.

Q. Did you see Mr. Burdge put his name to the bottom of this affidavit?

A. I guess it must have been his stamp, or I guess it must have been one of these machines he was riveting the papers together with.

Q. You saw him sign it?

A. No, I didn't notice Mr. Burdge sign it.

Q. You saw him put the seal on it?

A. I saw him have some kind of tools on it. I didn't know he was putting a seal on it.

Q. What was it you saw he was putting together?

A. I thought he was punching the papers together.

Q. What, down at the bottom?

A. I didn't know it was at the bottom or top; I wasn't even looking at him.

Q. These papers may have been pinched together?

A. I don't know; I thought he was just pinching these papers together with a riveting machine. I didn't know he was a notary public.

Q. And that was when he was putting the seal on, was it?

A. He may have been putting the seal on; I wasn't looking at him; I don't know whether he was or not. In fact, I didn't know it was an affidavit at the time; it didn't dawn on me it was such a thing.

Q. You read this affidavit over before you signed it, didn't you?

A. No, sir.

Q. And it wasn't read to you?

A. No, sir. I have no recollection—I knew some of the stuff they talked over that they was going to put in, but no knowledge or thought in my mind there was any affidavit in connection with it.

Q. That is, you just signed the affidavit and never read it over?

A. He said, "Here is the papers; you can sign here," and I signed.

The Court: What papers, and why did you sign them?

The Witness: Mr. Downey explained to me they would have to get up something to tie me hand and foot, was the words he used. That was the identical words Mr. Downey used,—if such a thing was possible. He also said there was a question as to whether the papers ever could be used or not without serving to invalidate the patent.

The Court: Well, at that time you had thought you had a valuable conception, didn't you?

The Witness: At the time that I got up this invention I had carried that in my head for years before, hoping the opportune time after I had left the employ of the company would favor me so that I could actually put it to test.

The Court: But you never did anything about it until 1925?

The Witness: I built it in 1920.

The Court: And then you went to South America?

The Witness: In 1920 when I informed Mr. Oliver I was going to make application for a patent on this device, he informed me that Mr. Downey—or the home office was getting up—in fact, Rex had went up in Canada some place and built one and was making application for a patent, and that office out there didn't know anything about it, wasn't informed of it.

The Court: Didn't that alarm you with respect to your conception?

The Witness: I felt they had gotten up a drop bottom scoop before I did at that time; I really felt Mr. Oliver was telling me the facts; I lost out because I didn't invent sooner; but I felt Keystone was ahead of me.

The Court: When was the first time you found out you hadn't lost out?

The Witness: The first time Mr. Downey called me down in the yard, 1925.

The Court: When you found you hadn't yet lost out, weren't you interested in knowing what sort of bonds they were going to tie you down by, sufficiently to read the papers?

The Witness: The only thing I understood, I thought when I lost out that I couldn't do anything more about the paper, and Mr. Downey told me it would be impossible for me to fight the case with the Keystone Driller Company. He said, "You haven't the money. You know it, and so do I." He said, "If there has been a wrong done let's get together and try to right the wrong."

The Court: Well, right or wrong involved something for yourself, didn't it? That is, you felt you were entitled to something? Didn't your knowledge of your right and your desire to do something for yourself prompt you to even read the papers that were submitted to you?

The Witness: My understanding of the papers was that I was signing something that would show, as far as I was concerned, I wasn't going to ever contest their patent; that they was going into court to fight the thing, and, in other words, I would keep still and wouldn't make any outcry of being the first one to build the drop bottom ditcher scoop. In fact, when Mr. Downey informed me there I had been the first one to build the scoop, and that was why he came to me, was the first knowledge I had that they hadn't been the first one to build a scoop. That is where it actually dawned on me that they had gotten the invention unfair.

The Court: Have you ever invented anything before?

The Witness: No. Well, I say no,—we have gotten up a device for a shovel; I didn't do any of the—Mr. Wagner detailed the work and Mr. Downey made application for a patent or something on it, and brought some papers out to me to sign. It was something about some dogs on some drums; but as far as the patent itself was concerned, I wasn't in any way versed in them.

The Court: Was it your brother that had the patent on this ditching machine away back in 1915, 1919?

The Witness: Yes, that is my older brother.

Q. You told Mr. Downey that at Joplin two scoops were made in order that one might always be available as a standby to insure against delay of the job, which

might have resulted from the necessity of repair or revision, didn't you?

A. How is that? I may have told him that when we first designed the scoop. Of course we didn't know just exactly—

Q. I just asked you if you told him that?

A. I may have.

Q. Now you also told him respecting those Joplin scoops as follows: "Both scoops were in about the same stage of development; one used as ditchers was given up. Both scoops were dismantled shortly after having been used on the Joplin Supply Company job and were converted into skimmer scoops."

Mr. Zane: We object. That is stating two things. I can't discriminate one from the other.

The Court: Well, if it is separable, give it to him.

Q. Withdraw the question. You also told him prior to April 16, 1925, about these Joplin scoops as follows: "Both scoops were in about the same stage of development; one used as ditchers was given up." Didn't you?

A. No, I don't remember telling him that.

Q. You didn't tell him that?

A. I don't remember telling him that.

Q. You didn't say that?

A. I don't remember that I told him anything like that.

Q. That is true, isn't it?

A. No, I don't remember as it is. I don't believe that I told him that.

Q. You also told him as follows about those scoops: "Both scoops were dismantled shortly after having been used on the Joplin Supply Company job and were converted into skimmer scoops"?

A. I think that is what Mr. Downey got up.

Q. Well, I asked you if you told him that?

A. No, I didn't say that.

Q. Well, that is the fact, isn't it?

A. No, I don't know what happened to those scoops.

Q. You also told him as follows, didn't you, about those scoops: "Experimentation was abandoned; and so far as I was concerned, this was because of the extreme care especially the latch arrangement; and because I did

not conceive the advantage of the dumping bottom to be of sufficient practical worth to justify the expense of redesign and further experimentation which would have been necessary, in my opinion, to make the device commercially useful"?

A. The word "abandoned" was brought—

Q. Didn't you tell him what I read?

The Court: The question is, did you make such a statement as that, in substance or in words.

The Witness: No.

The Court: Nothing of the kind?

The Witness: The word "abandoned" came up—

Mr. Richey: Answer the Court's question.

Mr. Zane: Perhaps you can ask the question over again, and don't make it so long. It is not fair to the witness, if your Honor please. I think he ought to put it clause by clause.

The Court: He can't because it is all his reason.

Mr. Richey: Well, he answered that question. The question I want him to answer is the one the Court asked him.

The Court: Let him read the last paragraph of that and see whether he told Downey anything like that,—the last paragraph in that paper.

A. (after examining paper) I didn't tell Downey that. Downey told me that.

Q. That is, you never told him anything like that?

A. Yes. If you will give me permission to supply what was said; I will try to do so.

Q. The statements are not true, to be exact.

The Court: In what regard are they different, that is, the fact? Not what you said. In what respect is the fact different?

Mr. Richey: I don't want a lot of his conclusions.

The Court: No. In what respect do you say the fact was different,—not what you said. We will assume for the purpose of my question that you didn't make such a statement; but what was the fact?

The Witness: The facts of the matter was Mr. Downey was wording—

The Court: No, I don't mean about writing it. What was the fact about what you did respecting that scoop?

The Witness: Well, we just didn't go any farther with it after we got done on the job; the scoops was beyond the experimental stage.

Mr. Richey: Well, I object to that as his conclusion.

The Court: Well, in what respect? What did you do to develop it?

The Witness: We took the skimmer scoop, the scoop that works in a horizontal motion from the machine; I hooked it up on the ditcher stick to pull towards the machine, which has a drop bottom; the bottom falls down; then I blocked the link strap so that the links stood and the scoop worked in a rigid position, in place of dumping and fishing for it. It dumped with a drop bottom.

Mr. Zane: He is talking about the public use. I don't think he understood what your Honor meant.

The Witness: Didn't he ask me how it differed, in what stage of construction?

Mr. Zane: Allow me, Mr. Witness, to address the Court. That is all covered in that former

Q. Didn't you tell Mr. Elmire both scoops at Joplin were dismantled shortly after having been used on the Joplin Supply Company job and were converted into skimmer scoops?

A. Tell Mr. Elmire?

Q. Yes.

A. I have no knowledge of telling him.

Q. You didn't tell him?

A. I have no knowledge of it.

Q. You don't say whether you did nor not?

A. I don't think I did; I don't believe I did.

Q. You wouldn't say you didn't tell him?

A. I don't think I did.

Q. My question is you wouldn't say you didn't tell him?

A. I don't believe I did; I am pretty sure I didn't; I don't think there is any question about that.

Q. Didn't you tell Mr. Elmire about this Joplin work, that experimentation was abandoned out there?

A. No.

Q. You didn't tell him that?

A. No, I am sure I did not.

Q. And didn't you tell Mr. Elmire it was abandoned so far as you were concerned, because of the extreme care required to make the device as a whole operative, especially the latching arrangement?

A. There was a question came up about the latching arrangement, and they wanted to know if there was anything wrong that could say it was not perfected.

Q. I asked you if you didn't tell that to Mr. Elmire?

A. No, I don't remember telling him the words you used.

Q. Well, you told him that in substance, didn't you?

A. In substance, the only thing that wasn't practical about the scoop, we were going to make a little change in the latch.

Q. Didn't you tell Mr. Elmire, in substance, that as far as you were concerned the experimentation at Joplin was abandoned because of the extreme care required to make the device as a whole operative, especially the latching mechanism?

A. No, sir, I don't remember any words of that kind.

Q. You wouldn't say you didn't tell him?

A. I don't think I did.

Q. Didn't you tell him experimentation was also abandoned because you didn't conceive the advantage of the dumping bottom to be of sufficient practical worth to justify the expense of redesign? Didn't you tell Mr. Elmire that?

A. No, I didn't; I am sure I didn't; I don't remember about it. It is not facts; those are not facts, and that is the reason I am sure I didn't tell him.

Q. And didn't you tell him further that experimentation was abandoned because of the further experimentation which would have been necessary to make the device useful commercially? Didn't you tell him that?

A. No, I am sure I did not. I feel positive there was nothing like that come up. The fact of the matter is, it was practical outside of the latch. They asked me if it was practical, and I said, "The latch, we will make a little change there." They said if that had to be

changed it really wasn't practical. I said the latch had to be changed.

Mr. Richey: Of course I object to all this conclusion he is putting in, volunteering.

The Court: Well, go along.

Q. Did you call up anybody at the Byers Company and give your name as Bernard Ross, on the telephone?

A. Yes, sir.

Q. When was that?

A. That was in 19 I don't know; it was sometime back; I forget just when it was; back around the case, and I was going to the facts of the matter was let me see if I can tell you just when this was.

Q. About February, 1929, wasn't it?

A. Possibly it was.

Q. February or March, 1929?

A. Yes, possibly.

Q. That was after you heard Judge Jones' decision in this case, wasn't it?

A. Possibly it was, and possibly it was before. I don't remember whether it was before or after, whether I even knew about the decision. I forget about that, whether I knew about the decision at that time or not.

Q. You told him that you had some information that would be valuable to them in this case, and offered to sell it to them for a large sum of money, didn't you?

A. Yes, sir.

Q. How much did you name?

A. I don't remember how much I named, but I found out later you couldn't sell evidence, so I didn't say anything more to them about it. The fact of the matter was I thought maybe I could benefit by producing—being able to go out west and gather up evidence to substantiate the actual facts.

Q. You offered to sell them for $5000 or more,—wasn't that the figure you named?

A. Yes, that is my recollection.

Q. What was the answer they gave you? Who did you talk to first,—for the Byers Company?

A. I don't remember who I talked to. I think I talked to Mr. Beckwith, if I remember right, and Mr. Beckwith referred me, I think, to his attorneys.

Q. Mr. Fay?

A. Mr. Fay.

Q. Then you talked to Mr. Fay about it, didn't you?
A. I talked to Mr. Fay about it.
Q. Right away?
A. Yes, right away.
Q. And you told him your name was Bernard Ross?
A. Yes, sir; that's right.
Q. And you told him you had some valuable information and offered to sell it to him for five thousand dollars or more, didn't you?
A. Yes, sir.

Mr. Zane: I would like to object. He said "talked to him"; but does he mean talked with him face to face or over the telephone?

Mr. Richey: Over the telephone.

Q. That's right,—over the telephone, wasn't it?
A. Over the telephone.
Q. Did you see Mr. Fay after that?
A. No, I was going to see Mr. Fay, but I learned after that that it was illegal, I couldn't make any price like that.

The Court: Who told you that?
The Witness: I don't remember who told me.
The Court: Somebody on the street tell you?
The Witness: No; I ain't sure but what it was my brother. I found that was illegal. I didn't know about that until someone told me, so I didn't go any further with the Byers Company.

Q. Which one of your brothers told you that?
A. I think it was B. C., if I remember right; either he or Roy.

The Court: You thought it was illegal to sell it, but it wasn't right to give it?
The Witness: I didn't know it was illegal for them to pay me to look up this evidence. I was told later it was illegal.
The Court: Having found out, at least, it was illegal, did it occur to you it might be honest to give it for nothing?
The Witness: Well, it might be.

Q. You didn't give it to them for nothing, did you?
A. No.

Exhibits B, C and D — Bernard R. Clutter

Q. You went back to Mr. B. C. Clutter about it, didn't you?

A. Possibly I may. Possibly it was R. P. I talked to about it.

Q. Then Mr. B. C. Clutter and Mr. Wagner went to see the Keystone people about it, didn't they?

Mr. Zane: I object.

A. I don't know anything about that; I don't know about that.

Q. Where was it you saw B. C. Clutter that he told you you couldn't sell this testimony?

A. I don't remember whether it was B. C. or R. P.

Q. Well, where did you see the one that told you?

A. I seen the one down at Akron, and I don't remember whether I seen Roy down there or where I seen him.

Q. How soon was that after you talked to Mr. Fay?

A. Right away, I guess, if I remember right.

Q. That is, you got right on the train and went to Akron?

A. I think so.

Q. Don't you know one way or the other?

A. That is my recollection.

Q. And there you saw Mr. Wagner, didn't you?

A. Saw Mr. Wagner.

Q. And Mr. B. C. Clutter?

A. I think so.

Q. And you talked to them about this matter?

A. Yes.

Q. Did Mr. Fay tell you to come to Cleveland to see him?

A. I don't remember what Mr. Fay told me, whether he told me to come to Cleveland to see him or not, but in the meantime, whether Mr. Fay told me or whether one of them told me, anyhow, some one told me I couldn't do that; that that would be viewed upon as illegal, or something to that effect; I don't remember what it was.

Q. So you stopped in Akron and didn't come to Cleveland to proffer the information?

A. No.

Q. Do you know Mr. B. C. Clutter and Mr. Wagner went down to Beaver Falls to see the Keystone people right after that trip of yours?

A. Possibly they did.

Mr. Zane: Object and move to strike out his answer.

The Court: Yes; objection sustained.

Mr. Richey: I asked him if he knew.

The Court: What difference does it make?

Mr. Richey: It will connect up with some other testimony.

The Court: Objection sustained.

Q. Who did you next talk to about this matter of this testimony, after you talked to Mr. Wagner at Akron?

A. I don't remember. I wasn't fully informed of it. Someone had told me it was illegal, and I couldn't collect any sum of money that would be extortionate or anything like that.

Q. So your didn't take it up with anybody else?

A. I don't remember talking to anyone else.

Q. You did take it up with the Osgood people, didn't you?

A. I talked to somebody about it, but I don't remember who it was,—at Atlantic City. I don't remember if it was the Osgood, but it may have been,—talking about a ditcher scoop there and talking about this Byers case; and that was after this had happened between me and Downey, and he had taken the machine away from me, and I told as far as Downey was concerned, he was not the real inventor of the scoop.

Q. When did you first talk to the Osgood or General people about this Joplin testimony?

A. I talked to someone at the Atlantic City Road Show. That was about 1929, if I remember right.

Q. Well, they paid you, didn't they, for working on that testimony?

A. They paid me just my salary, what I was being paid on the road work.

Q. How much did they pay you?

A. I forget what the sum was, but it was approximately my salary; in fact, I think it just totaled at my salary; it was figured out as a hundred dollars a week.

Q. Did they promise to pay you anything more?

A. No, sir, they did not; in fact, they told me very plainly they could not.

Q. Has anyone else offered you anything for this testimony?

A. What do you mean?

Mr. Richey: Read it.

(Last question read by the reporter.)

A. No other companies has offered me anything. Is that what you mean?

Q. Yes.

A. No other companies has offered me anything for the testimony.

Q. Where were you when you were subpoenaed today?

A. Oh, you mean in this case here?

Q. Yes.

A. Oh, I was subpoenaed yesterday. I don't mean these companies. This company, if I understand right, they paid me for my loss; it is only just what my actual loss in time would be.

Q. Where were you when this subpoena was served on you?

A. Over in Mr. Fay's office.

Q. That is, you come up here voluntarily from New Jersey or Pennsylvania, and then they served a subpoena on you?

A. Well, I really didn't mean to come voluntarily from New Jersey; I did everything in the world to get out of this case; in fact, I avoided them in every way that was possible, and they followed me up and finally told me all right, they would like to take my deposition. My boss that I was working for, he was so much offended about it; I was drug off this work before and it meant a loss to him, and when I asked him about coming he said—

Q. Never mind that. That is, you left New Jersey and went over to Pennsylvania, didn't you?

A. Yes, sir.

Q. And then when these people got in touch with you you came on up to Cleveland, and when you got here they served a subpoena on you?

A. Yes, sir, that's right.

Q. And you wouldn't come up here until they agreed to pay you, that's right, isn't it?

A. That's right.

Q. Now you said when Mr. Downey told you the machines would be repossessed you told him wouldn't do him any good, that's correct, isn't it?

A. Yes, that's right.

Q. What did you mean by that?

A. Well, I meant if he expected me to go ahead and stay quiet and let him go ahead and protect my invention—his patent and my invention, I didn't feel I should do that.

Q. That is, you were threatening to

A. I was really meaning to try to bluff him into leaving me keep the machine until I could get it paid for; not take it away from me after I had paid them so much money on it.

Q. And you made the same threats with Mr. V. C. Smith, didn't you?

A. No, I don't remember V. C. Smith. He looks more familiar since I have seen him, but I can't—I haven't got him placed. He wasn't wearing a moustache or something, or heavier than he was.

Q. You made the same threats to somebody—

A. To somebody that was out there. I wouldn't say it wasn't even Mr. Smith here; I don't remember.

Q. And you told the people you were threatening about the Joplin work and the machine?

A. I don't remember that.

Q. You gave them the basis of your threat, didn't you?

A. I can't remember that. I can't remember I gave him the basis of the threats.

Q. What did you say to them when you threatened them?

A. I don't remember. I don't remember about any sarcasm or anything. I told Rex he had better look out, he was fooling with fire. He wanted to know what I meant by that, and I said, "I don't feel good about it, Rex,"—words similar to that.

Q. You continued to make those threats as they tried to collect the money from you?

A. I wasn't meaning it as threats; I was meaning it as facts.

Q. You meant to say they were playing with fire every time they told you to pay your bill?

A. No, sir, I didn't mean that. I meant every time they would co-opefate with me until I got the machine paid for it would compensate me for something in the loss of my invention.

Q. When did you first learn you had to file a patent

application within two years after the public use of that device?

A. I don't know. I knew that before I got the patent—before I got up this invention at Joplin, I knew after I put it to work I would have to file inside of two years.

Q. So that when Mr. Downey came to you in 1925 you knew if it was for public use anything you had would be too late to file on, didn't you?

A. Absolutely.

Q. But your knew if it was an abandoned experiment you could still file one?

A. No, sir, I didn't know that.

Q. When you went out to Joplin to see these men that testified, Mr. Culbertson and the other men, you talked to them and refreshed their recollection about this Joplin work, didn't you?

A. Possibly I did.

Q. You saw each one of them and talked to him before he testified?

A. I talked to them; I think I talked to each one of them, but it wasn't for the Osgood people that I first approached them. I went out to talk to them first before the Osgood people knew anything about it.

Q. For whom did you go the first time to talk to these people?

A. Well, at the time for the Star Driller Company—well, really for my brother. He just wanted me to collect this evidence, so if they should ever need it we would have it; not really it was supposed to be used at that time, but if there was any evidence of that kind he wanted just to collect it and we would hold it.

Q. You testified that you invented this device used at Joplin in 1916, when you were employed by the Keystone, didn't you?

A. No, sir.

Q. You didn't say that?

A. No, sir. I said I conceived the idea back in approximately 1916 or '17; but I didn't invent it or attempt to build it.

Q. Why didn't you disclose it to the Keystone people at that time?

A. Well, I didn't feel I had a chance to do that and still hold shop rights on it if I did.

Q. That is, you thought they had some rights to

it if you made some invention in their employ, and therefore concealed it from them?

A. No, sir, I didn't conceal it; I hadn't worked it out and didn't have anything except what I had in my head.

Q. You didn't tell them anything because you were afraid they would have some rights under it, isn't that it?

A. I felt if I went ahead and produced it without attempting to work it out—

Mr. Richey: Read the question.

(Last question read by the reporter.)

A. Yes, sir.

The Court: You mean you didn't want them to have any rights?

The Witness: No, I mean as long as I hadn't used any time, any of the company's time for developing something of that kind, I didn't feel there was anyone entitled to it, and I thought some time when the opportunity favored I would try and work it out. The facts of the matter is, if you try to work out something while in the company's employ, that didn't prove practical, you are subject to some undue criticism, and that was one of the reasons I made no attempt to work this thing out while I was with the company.

Q. In Exhibit 40, which is letter written from the Keystone Driller Company, Rex Downey, to you, dated Dec. 17, 1928, the following appears: "The consideration from you to us rights you might have or might have to come, arising out of your Joplin experiment; also as a part of the consideration you made affidavit as to the abandonment of that invention." You never answered that letter, did you?

A. I don't know whether I did or not; I don't remember.

Q. After receiving that letter you never denied that that was the arrangement, did you?

A. I don't remember whether I did or not. If you have the letter I can identify it.

Q. There it is right here. That is a certified copy of the letter. I guess you did identify it this morning. (Handing to witness).

Mr. Zané: It is in, yes.

Q. Well, it has been identified, Mr. Clutter?

A. Yes.

Q. When was it that you were sent out to Joplin for the Star company to talk with these witnesses out there?

A. Well, it was, you may say, indirectly for the Star company; it was some evidence; I told them about the facts of what actually took place.

Q. I asked you when it was, Mr. Clutter.

A. It must have been in 1929, I believe, as nearly as I can remember.

Q. That was after the time you had called Mr. Fay on the telephone?

A. Yes, sir.

Q. And then when was it—

A. Oh, I don't know; no, I wouldn't say it was after that. I don't know; possibly it was before that.

Q. Was it after you learned you couldn't sell this evidence for money?

A. Yes, sir; no, sir. How is that question again?

(Last question read by the reporter.)

A. It was before that.

Q. Then how long after that was it you got in touch with the Osgood people about the Joplin evidence?

A. Oh, that was—I don't know; that was when the Road Show was going on at Atlantic City. I don't remember whether it was Osgood or who I was talking to. I was talking to someone down there; I couldn't tell you whether it was Osgood or who it was.

Q. Well, you went out to Joplin again for the Osgood people, didn't you?

A. Yes, sir.

Q. And when was that?

A. That was the spring of 1930.

Q. Did you ever call anybody else up on the telephone and represent yourself to them as Bernard Ross in connection with this testimony?

A. Nobody, except I remember—I don't remember any person except the Byers people, and I didn't know yet, I didn't know where I stood. My name is Bernard Ross Clutter, and it just dawned on me when I took the telephone—

Q. Didn't you call Mr. Oliver up in Joplin and tell him your name was Bernard Ross?

A. I don't remember whether I did or not.

Q. Do you deny you did?

A. I don't know; I don't remember.

Q. You asked Mr. Oliver to come down to the telephone to see you?

A. Oh, yes; I asked him to come down to see me.

Q. And you told him over the telephone you were Bernard Ross?

A. Yes.

Q. And you offered him a position with some company, didn't you?

A. No. I told him I would intercede as best I could. I didn't offer him any position, and I had no position to offer.

Q. Didn't you tell him you were organizing a sales company to sell this shovel machinery?

A. No, we talked over if we could organize a sales company, but I didn't tell him I was organizing a sales company.

Q. You didn't tell him you were?

A. No, sir.

Q. Didn't tell him you were planning to do that?

A. No, we talked over the question whether such a thing could be done.

Q. And didn't you tell him you would give him a position with the company?

A. No, I asked him if he would be willing to accept a position with the company?

Q. Yes, at a salary of five thousand dollars a year, or something like that?

A. No, I didn't mention five thousand dollars.

Q. What salary did you mention?

A. I don't remember whether there was any salary mentioned or not, but I feel sure Mr. Oliver would not expect five thousand dollars a year. Not that he isn't a good man—

Q. Never mind; I asked you a question. Isn't it a fact that this affidavit of yours was executed by you in a Notary's office at Toms River, New Jersey?

A. No, I don't remember anything about it, any affidavit to any papers. There was some papers—I don't know—some kind of a statement or something they

wanted me to sign; but as far as being any oath administered to me, there was no oath administered to me.

Q. Didn't you sign this Defendant's Exhibit 113 in the office of Mr. Burdge at Toms River, New Jersey, in the presence of Mr. Downey and Mr. Elmire?

A. The only—

Q. Answer my question.

The Court: Did you or didn't you? What is your recollection?

A. I don't recollect as I did. I don't recollect signing any papers except the ones at Lakewood. I won't say I didn't but I don't remember about it.

Q. Well, now, following this signing of this affidavit at Toms River, didn't you and Mr. Elmire and Mr. Downey go to dinner at a restaurant in Lakewood?

A. We had dinner at a restaurant in Lakewood.

Q. Which one of the trips was that?

A. I don't remember which one it was.

Q. Wasn't that after you signed this paper here, Exhibit 113?

A. I don't remember about when I signed that—the only papers I remember signing was at my house in Lakewood. I won't say I didn't sign them, but I can't remember signing any papers at Toms River. We went around to the restaurant there in Lakewood.

Q. Just answer my questions, please. Isn't it a fact that you were given a copy of this Exhibit 98, this unsigned agreement, just before or at the time the three of you were at dinner there in that restaurant?

A. No, sir. If I had an agreement of that kind I would find it some place about my papers.

Q. And didn't you after that meal or during the meal give your copy to Mr. Elmire and tell him to keep it for you?

A. Why, I don't remember of anything of that kind.

Q. You don't deny you did do that?

A. I think I would remember if I did do that. No, I don't remember anything of that kind. I won't say I didn't, but I am sure I didn't.

Q. Didn't the three of you discuss this agreement, Exhibit 98, at that time?

A. I don't remember whether this agreement was discussed at that time or not.

Q. Well, you discussed this Joplin machine and the Joplin work at that time, didn't you?

A. Mr. Downey and I discussed it practically any time we was together, but whether it was discussed before others or not, I don't remember.

Q. Do you remember you discussed it at that time before Mr. Elmire?

A. No, I don't remember whether we did or not.

Q. Were you ever at this notary's office, Mr. Burdge's office in Toms River with Mr. Downey and Mr. Elmire?

A. I was with Mr. Downey. I don't remember whether anyone else was along or not. We went in; in fact, I went in there and introduced him to the sheriff, who is a friend of mine.

Q. Mr. Elmire was along, wasn't he?

A. He may have been. I wouldn't say whether he was or not.

Mr. Richey: That is all.

REDIRECT EXAMINATION by Mr. Zane:

Q. Mr. Cutter, I show you that affidavit that has been spoken of in the testimony, and this is an original affidavit with your signature on, isn't it?

A. It looks like it, yes. That is my signature.

Q. When did you first hear the word "experimentation" used in regard to that work out there at Joplin with that scoop?

A. When Mr. Downey was writing up those papers at my house.

Q. And who used the word?

A. Mr. Downey.

Q. Now I wish you would take this agreement, look at the last paragraph there, and read it over, and state whether or not you ever said that or in substance that to Mr. Downey?

Mr. May: This witness has said he never saw that agreement.

The Court: Yes, he was asked about that. He said he never saw it and never signed it.

Mr. May: This is the affidavit.

The Court: Oh, I beg your pardon. I thought you had that unsigned agreement.

Mr. Zane: I got it in by reference to another, but this witness was not asked about it.

The Court: I thought you had asked him previously from the affidavit.

Mr. Zane: No, the cross-examination referred to that paragraph, and the witness I didn't think explained or was allowed to explain. He was just asked certain questions, and I want to have him read that.

The Court: That last paragraph in the affidavit?

Mr. Zane: Yes.

The Court: I asked him if he said that or anything like that.

Mr. Zane: My memory is at fault, your Honor, if that is the case.

The Court: That is where I was asking the question.

The Witness: May I explain when I found this?

Q. Yes, go on and say what you can.

A. The device which was referred to when Mr. Downey was at my house to be experimentation, and I said that was past experimentation, anything except the latching,—well, the latching arrangement is mentioned in here, and I informed Mr. Downey I did intend to make a little change on the latching at the time. Then he said, well, it wasn't complete. This paragraph, I was trying to explain this last paragraph so the Court will fairly understand it.

Q. Anyway, that is Downey's language and not yours?

A. Yes, Mr. Downey got that up.

The Court: You don't remember whether that is Downey's or not, because you never saw that, you didn't read it?

The Witness: I didn't read this, no.

The Court: Then you don't know whether it is Downey's language. It is not yours, at least?

The Witness: It is not mine. I assumed it must be Mr. Downey's.

Exhibits B, C and D Bernard R. Clutter

Mr. Zane: Now your Honor, I would like to have this one identified, because here turns up an original out of the custody of the plaintiff here, and another original is down at Toledo, and it shows they had both copies of the affidavit,—the plaintiff. (Please mark this Defendant, Appellant's Exhibit 113-A.)

Q. What position did you hold in 1916 with the Keystone Driller Company?

A. 1916? Salesman and demonstrator; looking after the shovel end of the works.

Mr. Zane: That is all.

Recross Examination by Mr. Richey:

Q. You recognize Mr. V. C. Smith now, don't you?

A. Yes, I remember Mr. Smith. When I got closer to him I remembered him. I may have confused Mr. Smith with Mr. Elmire being down there. There was one of them down there; I thought it was Mr. Elmire.

Q. You remember talking with Mr. Smith about this Joplin machine and Joplin work in the spring of 1927, don't you?

A. I don't remember our conversation; I don't remember what was said to Mr. Smith.

Q. He was there when you were looking at the Star machine?

A. Well, I forget what was said; I don't remember about Mr. Smith being there. However, I remember Mr. Smith after I come closer to him.

Q. And you remember now Mr. Smith was the man that was trying to collect money from you for these ditching machines and saw you from time to time?

A. Yes.

Q. And you threatened him about disclosing this Joplin matter, didn't you?

A. No, I didn't mean to threaten anybody. I might have told him if they would take the machine away from me I would have no other way of realizing, or something like that; but I wasn't meaning to threaten.

Q. And he finally told you in the summer of 1927 you could tell who you pleased about it, didn't he?

A. I don't remember him telling me that.

Q. You don't remember him telling you that?

A. No.

Q. You don't deny that he did tell you that?

A. Well, I don't remember of him telling me that.

Q. When you were out to see Mr. Oliver you told him if the Keystone Company wouldn't sue the Star you would keep quiet about the Joplin work, didn't you?

The Court: When was that?

Q. When was that?

The Court: Or if it happened, when was it?

A. 1928, I think, wasn't it? I can't remember exactly when I was out to Joplin.

Q. Well, when you were out there you did tell him that, didn't you?

A. I don't think those were the words that was used. It wasn't our ideas to do any exposure unless the Keystone started action against the Star.

Q. Yes, and he told you the Keystone Company wasn't interested in anything of that kind, didn't he?

A. I don't remember what he told me.

Q. Well, he didn't accept your proposition?

A. What proposition?

Q. If the Keystone wouldn't sue the Star you would keep quiet?

A. Mr. Oliver didn't have anything to accept about that. Our conversation was only in a friendly way. Mr. Downey is the man in charge of that, not Mr. Oliver.

Q. Well, Mr. Oliver told you later Keystone wasn't interested in anything of that kind, didn't he?

A. No, I wouldn't say he didn't; I don't remember whether he did or not.

FURTHER REDIRECT EXAMINATION by Mr. Zane:

Q. Tell us what your conversation was with Mr. Oliver, how it came up and what it was about. Explain the whole thing.

A. There was some talk, some idea of getting up a sales force; that is, my views was to get up a sales force for selling the Star shovel, to see if we could get some territory for the Star people.

Q. What was the Star shovel?

A. The Star shovel is manufactured here at Akron; and I talked to Mr. Oliver and I was sincere in what I had to say.

Q. Who were interested in the Star shovel, any of your family?

A. Yes.

Q. Who were they?

A. Two of my brothers, Roy P. Clutter and B. C. Clutter.

Q. Anybody else?

A. That's all of my relatives.

Q. Was this man Wagner interested in the Star?

A. Mr. Wagner was interested in the Star.

Q. Now go on and tell us.

A. It wasn't authority that I was speaking from when I was talking to Mr. Oliver; it was not that my brothers had asked me to organize, but it was a conceived idea if we could get the territory and get some good loyal people together, then I would work with Mr. Oliver. I have been associated with Mr. Oliver more or less—

The Court: Is this important?

Mr. Zane: I don't know whether it is or not; I am trying to find out.

The Court: Apparently not.

Mr. Zane: We have no more testimony to offer under your Honor's ruling. This testimony here is confined to what the Courts of Appeals says, the oral testimony to be introduced by witnesses and naming the witnesses before your Honor, but if other testimony is to be gone into, then we would consider it necessary to offer testimony upon the diligence of the defendant in finding this testimony. But as I see the order, and as I see the order made in this case by your Honor, it does not contemplate anything but those depositions and the two witnesses to take oral testimony.

The Court: Well, that is all the evidence you have, then? Under this order that is all you have to offer at this time?

Mr. Zane: Yes, sir, I wouldn't want to be precluded.

The Court: Oh, no; if there is anything that gets in that is not covered by your evidence, you will have an opportunity.

Mr. Richey: If your Honor please, I have checked this back and have some more light on it.

Our first witness is Mr. V. C. Smith, who we call largely to discredit Mr. Clutter.

The Court: You have the right to do that. His credibility is open to attack.

Thereupon the plaintiff called as a witness, VELEAIR C. SMITH, who, being first duly sworn, was examined and testified as follows:

DIRECT EXAMINATION by Mr. Richey:

Q. Mr. Smith, give us your full name, will you?

A. Velenir Courtlandt Smith.

Q. You reside at Lynnfield, New Jersey?

A. I do.

Q. What is your present occupation?

A. Consulting engineer and geologist, head of the V. C. Smith Management Company, managers of public utilities, oil and gas properties.

Q. Were you ever employed by the Keystone Driller Company?

A. I was.

Q. What years?

A. I could not give you—I do not remember the exact day or date of starting employ. My employment terminated about the end of 1928.

Q. You went to work about 1924, didn't you?

A. 1924-'25.

Q. You worked out of the New York office of the Keystone Driller Company?

A. I did.

Q. And one of your jobs was collecting or trying to collect money from Bernard R. Clutter, who testified here, wasn't it?

A. Yes, sir.

Q. For those two ditching machines we are talking about?

A. Yes.

Q. You reported to Mr. R. J. Bole, of the New York office of the Keystone company, didn't you?

A. I did.

Q. Did you see Mr. Bernard R. Clutter personally in your efforts to collect this money?

A. I did.

Q. About how many times did you see him in an effort to collect that money from him?

A. Over a period of time between 1926 and '27, I estimate not less than twenty times.

Q. Now take these conversations up more or less in rotation as you come to them. About when was the first conversation?

A. The first conversation, as near as I can remember, was out side of Newark; the exact locality or the name of the street I can't remember.

Q. That was about October or November, 1926, wasn't it?

A. It was in the fall of 1926.

Q. What did he say to you at that time in response to your request for the payment of the money?

Mr. Zane: We object. This is for the purpose of contradiction.

The Court: Yes, put it direct, the things which are denied.

Q. Well, did you have any conversation with Mr. Clutter at any time between 1926 and 1927, where he told you about the Joplin work and experiment?

Mr. Zane: Object.

The Court: Well, it is preliminary. He may answer.

A. I did.

Q. Who was present at that conversation besides you and Mr. Clutter?

A. At the start of one, or possibly two, of the many conversations—

Mr. Zane: We object and move to strike it out.

The Court: Yes, it ought to be directed in the usual way by counsel. The statement which was denied by Clutter should be put to the witness to see whether he made it.

The Witness: Your Honor, if someone is present for possibly five words of the conversation and then moves away, hearing only the initiation—

The Court: We don't expect you to remember every precise detail. We just want your best recollection about it.

A. Mr. Birt C. Clutter.

Q. Was that in the presence of the Star machine?

A. Yes, sir.

Q. Did Mr. B. B. Clutter at that time say to you that he had had a ditching machine at Joplin, Missouri, and had worked with it there?

A. He had talked about it previous to that.

Mr. Zane: Move to strike it out.

Q. Did he at that time?

A. He did at that time.

The Court: Clutter was asked whether or not he did not state that to Smith. He may answer.

Q. Did he at any other time say that to you?

Mr. Zane: We object. That one time was identified.

The Court: He may answer.

The Witness: May I identify the time?

The Court: Yes, if he said so at another time you may give the time.

A. The second time that I pressed Clutter for collection in the fall of 1926, he talked to me.

Mr. Zane: We object.

The Court: Well, the question is, did he tell you about the Joplin use.

The Witness: You told me to identify the time.

The Court: Well, you can identify it. When was it?

The Witness: The second time that I talked to him about a collection, in the fall of 1926.

The Court: Now the question is, did he at that time tell you about the use of the drop bottom ditcher at Joplin?

The Witness: Yes, sir.

Q. Did he come to your house at any time?

A. Yes, sir.

Q. When was that?

A. Early in '27.

Q. Did you go to his house at any time?

A. Several times.

Q. When?

A. Along about April or June of '27.

Q. Did you repossess those two machines?
A. I did.

Mr. Zane: We object. This is not rebuttal.

The Court: Well, as I recall it, Clutter said he didn't know who repossessed them. I don't know whether it is material to the case.

Mr. Zane: He said they were repossessed by somebody but he couldn't remember who it was.

Q. Did B. R. Clutter at any of these conversations tell you it would not be good for the Keystone company if they pressed him for that money?
A. Yes, sir.
Q. At which of the conversations did he tell you? Identify them by time and place, as nearly as you can.
A. From about the second time, which I have previously mentioned, the fall of 1926, through to the time I repossessed his last shovel, at almost every time I saw him personally and asked for money.
Q. Did you at any time tell him he could tell who he pleased about that Joplin work and experiment?

Mr. Zane: Object.
The Court: He may answer.

A. Yes, sir.
Q. When was that?
A. That was just prior to repossessing the second machine.
Q. And what date was it?
A. It would be about the middle of the summer of 1927, I believe.
Q. And what were your exact words, as well as you remember them,—not the substance?

Mr. Zane: We object. That is not an impeaching question.

The Court: No; you have to ask him directly, the same question that was denied by the witness.

Q. Did B. R. Clutter, in speaking of this Joplin work, tell you that more experimentation might have resulted in something?

Mr. Zane: Object.
The Court: Of course it is difficult to remem-

ber everything that was asked Clutter. I don't remember whether that was asked or not.

Mr. Zane: That question was not asked.

Mr. Richey: I don't think I asked those exact words, your Honor.

The Court: Then I will sustain the objection.

Mr. Richey: That is all I have of this witness on this specific question, your Honor. I would like to argue further our right to go into the matter more fully under this order.

The Court: What matter?

Mr. Richey: These questions involved here, that it is not limited to this specific thing. I told you about this thing, what the opinion of the Court of Appeals was. What happened was this bill of review was filed by Mr. Zane, and which I read, asking the lower court to review the question of validity of this patent, and so we went up there to Grand Rapids, and Judges Dennison and Hicks were up there, and in the argument we, the plaintiff, agreed to stipulate these depositions that have been stipulated here.

The Court: The depositions covering the question of the prior use at Joplin.

Mr. Richey: But there was one witness we didn't have at Toledo,—Mr. Oliver, who has some information on that question, and we want to put him on on that question. They were all their witnesses. It was never my understanding that anything was to be done except this matter was to be gone into by the lower court. The upper court then had the idea of splitting the question of validity; let the Master take up the question of validity and let the court take up the question of suppression of evidence. That was last June, when your Honor wouldn't get the equity cases until this winter. And then Mr. Zane and I—I prepared some stipulations and we tried to stipulate the matter; finally did prepare a stipulation and sent it on to him, in which I said there was no more testimony to be taken, taking the position Mr. Zane takes now, and he refused to sign that; and here is from his letter: "We cannot by stipulation control the Master's judicial discretion (showing conclusively that he has understood all along this thing was to be judicially considered in the lower court.) The issue of validity is referred

to him. He is to decide upon the issue. He will wish and properly wish to receive all the evidence newly discovered that bears on the issue referred to him, and by stipulation, as you suggest, we will be tying him down to say that something in the second Cutter deposition which he may say is germane is not germane, and that he is bound to reject it. But we wish the stipulation to leave open before the Master the introduction of all newly discovered evidence that bears upon the issue of validity; but you seem to be trying to narrow the evidence that can be introduced before the Master. We are willing to take his opinion." We agreed to leave out the part that the testimony was to be limited as indicated there, and the present arrangement was made by leaving that out and putting in the reference there to the bill of review, just as if the bill of review was considered, and the bill of review asks that the Court reconsider and review, lower court reconsider and review the question of the validity of the patent.

The Court: Of course you don't look to the bill of review to see what the courts do.

Mr. Richey: Well, the order said—not copying all of that bill of review; it was about forty or fifty pages long—the order said, "And the consideration of said matter will be with the same effect as if the bill of review of defendants had been entertained." There wasn't any use going and repeating the bill of review in this order; so it was summed up that way. Now we brought Mr. Oliver from Joplin, Mr. Smith from New Jersey, and several people from Beaver Falls, to go into this matter thoroughly. Mr. Oliver will testify about the Joplin use; Mr. Smith has some information along those lines, too.

The Court: Along those lines? I will let you put in evidence on the Joplin use.

Mr. Zane: If your Honor please, the stipulation that is made here—or rather it is your Honor's order—I thought that disposed of the testimony. Originally, your Honor, the stipulation that Mr. Richey wanted made was a stipulation by which certain evidence on a certain issue, that is, of suppression, should be referred to your Honor. He wanted the other question referred to the Master, and it was to

be left to the Master because the Master had the accounting before him. Now that stipulation could not be agreed upon. He on the stipulation as to the depositions would not agree; so then that was given up, and then Mr. Richey proposed an order to be signed by this court, and the stipulation to be signed by this court, and your Honor's order is—

The Court: Well, it just copies the Court of Appeals.

Mr. Zane: Now, then, the Court of Appeals evidently didn't want any evidence except on this alleged issue of suppression of evidence, and the evidence that was already shown to them on the subject of the Joplin use.

The Court: No, I don't think you can limit it to that. Listen while I read the Court of Appeals order. "On the consent of the parties hereto, it is hereby ordered that the defendant appellants be permitted to move the district court to reopen the above entitled case for the purpose of taking testimony by both defendant appellants and plaintiff appellee, regarding only, first, an alleged ditching machine and the alleged use thereof at Joplin, Missouri, referred to in certain depositions filed in the case, entitled Keystone Driller Company versus The Osgood Company," etc. Now the testimony of both parties regarding an alleged ditching machine and the alleged use thereof at Joplin, Missouri. "And, second, the alleged suppression." Now this order is issued with the understanding that the testimony to be taken hereunder will be taken before the district judge, but the said evidence contained in the deposition may be taken by stipulation, offered and received. Clearly, it seems to me any evidence bearing on the question of the use at Joplin, in addition to the depositions, should be admitted, but only that and nothing beyond that.

Mr. Zane: Then your Honor, I think it would be better if we should offer the evidence, since it says there upon the suppression of evidence, newly discovered evidence, it is incumbent upon us to show that we have exercised reasonable diligence in discovering that, and I would like to put one witness on the stand,—Mr. Fay, whom Mr. Clutter has mentioned upon the stand, and possibly Mr. Beckwith, just to

show shortly the circumstances, and the first information and the only information they got.

The Court: Well, I supposed the Court of Appeals had passed that question. That is, I would have assumed if they had wanted this court to have examined that they would have said so, because in a patent case some months ago that very thing was ordered to be done; that is, the district court was directed to consider both the question of whether diligence had been exercised, and, if it had, the reception of the newly discovered evidence. But there is nothing said about it.

Mr. Zane: They seem to take it for granted that diligence has been shown. I might say with the bill of review filed in the upper court there was contained a petition asking for it and setting forth the diligence, and the bill was accompanied by an affidavit of Mr. Fay, and all we could do here would be to put in the testimony that is contained in that affidavit and in that petition on the subject of diligence.

Mr. Richey: We have no objection to them putting in that testimony, your Honor.

The Court: All right. Go ahead.

Mr. Richey: May I finish with this witness? I want to show in his trips around the country he found this matter of this Joplin experiment and work was known to many people who talked to him about it.

The Court: Yes; that is, prior to the time—

Mr. Zane: Now, we haven't any chance to answer this.

Mr. Richey: You can put your men on. I will agree that you may do that.

(Direct Examination of Veleair Smith continued by Mr. Richey.)

Q. Did you make any trips out west between 1925 and September, 1927?

A. Yes, sir.

Q. And what was the earliest ones of those trips?

A. The latter part of '25, I believe.

Q. And did you on that trip talk with anybody about this Joplin machine and Joplin work?

A. I did.

Q. With whom?

A. Mr. Lisle Hazen, Mr. Eugene Blosser, Mr. Carter, the first name I don't know.

Q. J. L. Carter?

A. I don't remember his first name.

Q. Anybody else you remember?

A. A contractor in Tulsa, Cannady, or something like that.

Q. H. L. C-a-n-n-a-d-y?

A. I believe that is it.

Q. What did he say to you?

Mr. Zane: Object to it as hearsay.

The Court: Objection sustained.

Q. Did you also talk to Mr. Eugene Blosser?

A. I mentioned Mr. Blosser's name.

Q. Mr. H. C. Hutchison?

A. Yes.

Q. Mr. Dell Willard?

A. I am not certain of Mr. Willard, whether I am confusing him with another man who is located at the plant. I did talk with someone who was at the plant, who had been there during the time this was tried and the experiment discontinued.

Q. Have you named all you talked to on the first trip to the Joplin work or Joplin experiment?

A. I think so.

Q. When was your next trip out there?

A. Possibly four or five months later.

Q. And did you talk to anyone on that trip?

A. More or less the same men. On that particular trip I took Mr. Blosser and Mr. Hazen down to Texas to investigate the possibilities of establishing several agencies through the West.

Q. Did you talk to Mr. Ross Blake?

A. I talked to him at a bridge party one night about his watching the experiments being made.

Q. When was that?

A. That was on my first trip to Joplin. Mr. Blake was my direct superior, and former secretary.

Q. What was the date of that trip?

A. 1925, I think. I am unable to give you the dates exact.

Exhibits B, C and D — Frank Oliver

Cross Examination by Mr. Zane

Q. You talked with Lysle Hazen, you say?
A. Yes, sir.
Q. He was a man who had seen the machine actually at work?
A. Not only had seen, but according to his statements—
Q. Answer my question yes or no.
A. Yes.
Q. Who was Blosser; where did he work?
A. Keystone Driller Company.
Q. Who was Carter; where did he work?
A. At that time for the Keystone Driller Company.
Q. Who was this contractor from Tulsa?
A. Canady, beginning with "C"; I couldn't give you the exact spelling.
Q. Who was Hutchison?
A. Shovel demonstrator for the Keystone Driller Company.
Q. Who was Dell Willard?
A. The man whom I am indentifying as Dell Willard was an employee of the Keystone Driller Company.
Q. And who was Ross Blake?
A. Superintendent and general manager of a subsidiary, of the St. Joseph Lead Company.
Q. Did he have any connection with the Keystone Driller Company?
A. No.
Q. Had he seen the machine at work?
A. He had.
Q. In Joplin?
A. Yes, sir.

Mr. Zane: That is all.

Thereupon the plaintiff called as a witness Frank Oliver, who being first duly sworn, testified as follows:

Direct Examination by Mr. Richey

Q. Will you give your full name?
A. Frank Oliver.
Q. How old are you, Mr. Oliver?
A. 62.

Exhibits B, C and D — Frank Oliver

Q. You reside at Joplin, Missouri, don't you?

A. Yes, sir.

Q. And work for the Keystone Driller Company at Joplin?

A. Yes, sir.

Q. And work for the Keystone Driller Company at Joplin?

A. Yes, sir.

Q. From 1910 to 1926 you were manager of the western branch of the Keystone Driller Company at Joplin, Missouri, weren't you?

A. Yes, sir.

Q. During that period that branch was a sales office and did repair work on these excavating machines; that is correct, isn't it?

A. Yes, sir. It was from 1910 to 1916, the office was in Carthage, about sixteen miles from there; later moved over to Joplin, and established there and has been there since.

Q. Now, in 1916 you sold to the Wallower Brothers two Keystone machines that were operable either as ditchers or skimmers; that is correct, isn't it?

A. Yes, sir.

Q. That is the old Clutter ditcher?

A. Yes, sir.

Q. The Wallower Brothers were in the mining business at that time?

A. Yes, sir.

Q. And then they went into the contracting business at Joplin, Missouri?

A. Yes, sir.

Mr. Zane: I object. He is doing all the testifying.

The Court: Well, I suppose it doesn't matter. It doesn't depend on the recollection of the witness particularly.

Q. And they took a job at Joplin, Missouri, at Third and Joplin Streets; that is correct, isn't it, for the Joplin Supply Company?

A. Yes, sir.

Q. Started that work in the latter part of 1919?

A. 1919.

Q. And they were using on that work the machines which you sold them; that is correct, isn't it?

A. Yes.

Q. What kind of soil was it that they were working on on that job?

Mr. Zane: We object. This is going clearly outside of anything in the case that ought to be offered here. This is a new witness.

The Court: This is a new witness, but I understand it is limited to this alleged use at Joplin.

Mr. Richey: Exactly so.

The Court: That is the theory upon which it has been offered. You may have an exception.

Mr. Zane: Exception.

A. Why, the first two feet was loam, and after that was shale, and then it started in with yellow clay and gravel.

Q. Was it a level country or hilly country?

A. Practically level.

Q. Now, was the machine when first used on this work, a skimmer or a ditcher?

A. A skimmer.

Q. And how much of the soil was taken off with the skimmer?

A. Well, of the whole total excavation, I would say that two-thirds of it was taken out with a skimmer.

Q. And how many feet down from the surface was taken off with the skimmer?

A. Eight or ten, about nine feet at least.

Q. Was that below the shale?

A. Oh, yes.

Q. And then what change, if any, was made in the machine?

A. Well, after they abandoned the skimmer, they put on a standard ditcher.

Q. That is the standard Clutter ditcher?

A. Yes, sir.

Q. What is known as the dump scoop?

A. Dump scoop.

Q. How much of the work did they do with the ditcher when it was in that shape?

A. Oh, I should say half of what was remaining. It would be about thirteen per cent.

Q. How closely did you watch the work that was going on on this job?

A. Why, the post office was right across the street, south of this building, and it was my work to stop at the post office every morning and at noon, and also return there in the evening for the outgoing mail; so I was there three times a day practically all the time the work was going on.

Q. Were these the standard skimmer scoops that they were using on these skimmers?

A. They weren't our make; they were similar to what we were using, but they were a little larger and a little heavier.

Q. Now, did you have a conversation at any time with Mr. Herb Wallower, or anybody else in which you were asked if it was possible to put the drop bottom scoop on this ditcher?

Mr. Zane: We object as hearsay.

The Court: Yes, objection sustained.

Mr. Richey: I merely asked him if he had such a conversation.

Mr. Zane: It is immaterial whether he did or not.

Mr. Richey: Your Honor, I think that is competent to show that if there was any invention in this thing, it wasn't Mr. Clutter that did it. Of course the only way you can prove that you made an invention is by disclosure.

The Court: What Wallower told him would certainly be hearsay.

Q. Well, did you make any changes in this ditcher attachment that was being used on either one of those machines?

A. You mean change the skimmer scoop?

Q. Yes?

A. Yes, sir.

Q. And what was that change?

A. We changed the skimmer scoop over to a ditching bucket.

Mr. Zane: To what?

The Witness: To a ditching bucket; just reversed it.

Q. That is, you took off the standard Clutter scoop off the ditcher and put on one of these skimmer scoops?

A. Yes.

Q. Now, at whose suggestion was that done?

A. Herb Wallower.

Q. Where were you when the discussion was made by Mr. Wallower?

A. On the sidewalk, right where the work was being done.

Q. Just what did he say to you and what did you say to him?

Mr. Zane: We object.

The Court: Objection sustained.

Q. What was the next thing you did after that with respect to this change?

A. Well, the buckets were changed over out at our shop.

Q. Did you talk to anybody about it before you made the change?

A. Yes, I called in the superintendent.

Mr. Zane: We object.

Q. Was Mr. Bernard Clutter called in?

A. He was called up from the shovel, yes. He was operating on the shovel at the time; he was called up there to get his views of it.

Mr. Zane: I can't understand this man.

Q. That was after you talked to Mr. Wallower and the superintendent about it?

A. Yes, sir.

Q. How soon after that talk to Mr. Wallower was this change made in the ditching attachment?

A. Made that day and the following day.

Q. Who made the change?

A. It was made under Lisle Hazen's supervision at the shop.

Q. At the shop of the Keystone Driller Company?

A. Keystone Driller Company.

Q. Who were the people who made the change?

A. Well, the blacksmith and helper, and Herb Wallower came out, and also Bern' Clutter came out at different times and made the changes on the latch.

Q. What is the name of the blacksmith?

A. Clerk.

Q. He is dead now, isn't he.

A. Yes, sir.

Q. Now, after the ditcher was changed, after the ditcher stick was changed in this manner, what was done with it?

A. You mean after we finished the job?

A. Yes.

A. We brought them out to our shop, and Mr. F. C. Wallower asked me if I would help him

Mr. Zane: We object.

A. Well then, I will answer your question direct. They were changed back to their original form of skimmer scoops.

Q. Were they used in the meantime.

A. No, sir.

Q. Now, after the blacksmith and you people mounted this skimmer scoop on the ditcher, it was used on this excavation job, wasn't it?

A. Yes, sir.

Q. And did you see them use it there?

A. Yes, sir.

Q. Was it brought back to the shop at any time to be repaired or changed again?

A. Yes, sir.

Q. How often?

A. I would say at least two or three times, and then different attachments were made and taken down; in fact, I had taken some down myself in the car, and they were put on there at the job.

Q. How long did those changes continue to be made?

A. Practically all the time the work was going on while they were using this bucket, after the skimmer bucket had been converted over to the ditcher bucket.

Q. And what was the nature of the changes?

A. Principally in the latch.

Q. Now you say you saw them work with it two or three times every day while it was in use; that is what you said?

A. Yes.

Q. How did they operate it?

A. Well, they first tried it with the pull rope, a man standing alongside of the machine; but that wouldn't

work. And then the driver on the wagon would some times dump it with his hand. Then they used the club or stick, or whatever you want to call it, to unload it. Then he used a short pull rope, a man standing alongside of the wagon would jerk it. In fact they were using all those different methods up until the job was completed.

Q. How did they close the bottom of the bucket?

A. By letting it down on the ground. It would not close by momentum, by swinging.

Q. How long did they continue to operate it there?

A. Well, I think about the total job was only about 12 or 15 per cent of the total excavation that was taken out with that bucket.

Q. Well, how long with respect to the time they discontinued the use of the machine did they continue to operate it in the manner in which you have described?

A. Oh, three weeks, three or four weeks.

Q. Well, were they still operating it that way when you changed the machine back?

A. No, we changed it back to a skimmer scoop, and then they used that to finish up; we used the original skimmer scoop on the machine to finish the job.

Q. Now, at the time it was taken out to change it back to the skimmer scoop, were they still operating it by the snag closure?

A. Yes.

Q. And how were they opening it at that time for unloading it?

A. The same way, by a short pull rope or stick.

Q. Who changed it back to the skimmer scoop?

A. We did out at the shop, the Keystone Driller Company.

Q. Then you said they used that to complete the job?

A. To clean up, yes.

Q. Was any such change made in the other ditching machine that was working on the job?

A. No.

Q. That was continued to be used as the Clutter machine?

A. Yes.

Q. With the solid bucket?

A. Right.

Q. And at the same time you had this second skimmer bucket available all the time?

A. Yes.

Mr. Zane: I wish to object to this style of examination. Every question is leading and putting an answer in the mouth of the witness.

The Court: Well, it may be slightly subject to that criticism. Avoid it.

Mr. Richey: All right, sir. I was just saving time.

Q. What was the total depth of this excavation?

A. It was around twelve feet, twelve to fourteen.

Q. What was done with these two special scoops after the completion of that Joplin excavation, if you know?

A. After they were converted back to the skimmer scoop, one of them was sold, one of them went with one of the machines that Wallower sold to a man at Ardmore, Oklahoma.

Q. What became of the other one?

A. I traded on a standard ditcher bucket for the other, and it went with this Ardmore shovel; then we had kept that for some few months, I don't remember just how long, and I sold it to Rouse & Mowbridge, contractors.

Q. Do you remember the name of the Ardmore man that bought the other one?

A. No, I don't recall his name.

Q. Or was it not a skimmer scoop when the Ardmore man bought it?

A. Yes, sir.

Q. Did he buy anything else from you?

A. He bought a ditcher, the one that I had traded Wallower.

Q. A standard ditcher?

A. A standard ditcher.

Q. Did you have anything to do with making that sale?

A. Yes, I gave him the inquiry. We didn't have any used shovels at that time; so I assisted him in selling it; that is, gave him the inquiry and helped sell it and went down to his office and talked with this prospect.

Q. Now, what was the nature of the connection between the bucket and the stick with respect to rigidity

or flimsiness on this machine when this special skimmer scoop was connected on as a ditcher scoop as you saw it operating in that Joplin work?

A. Well, it wasn't right; it would sway to one side.

Mr. Zane: Swayed?

The Witness: Swayed some, yes.

Q. State whether or not you saw them using it to break in and dig in any rock?

A. No, they didn't use it for digging that. They had to blast the rock.

Q. Blasted the rock when they came to rock?

A. Yes.

Q. What if anything would happen to the latch when the ground was hit with the bucket?

A. It would fly loose.

Q. And so how did they make the contact between the bucket and the ground when they were digging?

A. They allowed it to drop down to the ground and closed it, the weight would close it.

Q. But when they started to dig or make an excavation how did they approach the ground with the bucket?

A. It would have to approach it very slow in order to keep it from opening.

Q. State whether or not that was the way they did it.

A. Practically all the time, yes.

Q. State whether or not you saw this machine with this special bucket arranged for a ditcher bucket in operation on the last day it was used at Joplin?

A. I think I did; yes, I saw it every day practically.

Q. Joplin is a town of about thirty-five thousand, isn't it?

A. Yes, sir.

Q. And state whether or not many or few people watched this use of this machine with the special scoop, arranged as a ditcher scoop.

Mr. Zane: We object to that as not within the scope of the order of the Circuit Court of Appeals.

The Court: Oh, he may answer. You may have an exception.

A. Oh, I should say there were five thousand people saw it working there during the time it was in operation, because I have seen the street lined up with people. It was in a logical place in town, right in the center of the district, right near the big hotel there, and the post office, and it was accessible to every one coming in and out of town mostly.

Q. Did you see any people there that you knew, watching this?

A. Yes, sir.

Q. State whether or not you saw any contractors or excavator machine operators?

A. Yes, I saw Henry Kost, a contractor; V. E. Koch. Then I saw Jim Alhands, of Alhands & Davis.

Q. Any others you think of?

A. I saw Scorps of Pittsburgh County, another man who came in and saw that—I don't know just how he spells that name, but I think it is S-c-o-r-p-s.

Q. Now, will you state whether or not one of your duties was to report to the main office of the Keystone Driller Company at Beaver Falls, any new developments or improvements made in their equipment?

A. Yes, sir.

Q. What if anything did you charge the Wallower Brothers for converting these scoops over to ditcher scoops?

Mr. Zane: We object as irrelevant and immaterial.

The Court: Immaterial; exception.

Mr. Richey: I think that is competent to show, your Honor, on the question of being nothing but an experiment. The purpose is to show that our company was interested in this thing as an experiment to see if it would work out. When we found it wouldn't, why, nothing was done about it.

The Court: The amount of pay wouldn't help.

Q. Well, was anything paid for that to you?

A. Not for making this experimental work.

Mr. Zane: We object and move to strike out "experimental work".

The Court: I will promise not to be prejudiced by it.

Mr. Zane: Well, it is his conclusion.

Q. Let him finish the answer.

A. I wanted to give Wallower's conversation, how it started.

The Court: You see, under the rules of evidence you cannot tell about Wallower's conversation. Just tell what you did and what was done.

The Witness: Well, we made this change to a ditcher bucket and made these different latches, and different experimental work that was going on there without any charge. When we converted them back to the skimmer bucket, we charged him for that, but nothing else.

Q. Did you report this Joplin work to the main office?

A. No, sir, I did not.

Q. Well, if it was your duty to report such things, why didn't you report that?

A. Well, it had never reached the stage where we thought—

Mr. Zane: I object and move to strike.

The Court: Not what you thought.

A. (cont'd) Never reached the stage where we thought it was a commercial proposition.

Mr. Zane: I move to strike out his answer.

The Court: It may remain. Exception.

Q. State whether or not any of these people who watched the machine work, or any one else, asked you to make any construction of such construction for them.

Mr. Zane: We object as irrelevant and immaterial.

A. Never did.

The Court: Oh, he may answer.

Q. State whether or not you or anybody under your direction as far as you know there, recommended that construction to any one else?

Mr. Zane: We object as irrelevant and immaterial.

The Court: He may answer. You may have an exception.

A. Never did.

Q. State whether or not your company continued to sell the standard Clutter ditcher attachment.

Mr. Zane: We object as irrelevant and immaterial.

The Court: Well, he may answer and you may have an exception.

A. We did.

Q. State whether or not there were at that time for your branch any prospects for excavating machinery including a ditcher attachment?

A. Yes.

Q. You know Bernard R. Clutter, don't you?

A. Yes, sir.

Q. Did you ever inform Mr. Clutter that Rex Downie had gotten up a drop-bottom ditcher scoop and was taking out or had taken out a patent on the same?

Mr. Zane: We object.

The Court: What is that?

Mr. Richey: That is contradicting Mr. Clutter, what he said yesterday.

Mr. Zane: That question wasn't put to him, I think.

Mr. Richey: I don't remember exactly the words put to him yesterday.

Mr. May: I think the Court asked the name of the man. I want to refresh the Court's memory. He asked the name of the man Mr. Clutter referred to as having talked to in Joplin. We told the Court it was Mr. Oliver. You remember that incident?

The Court: Yes.

(Question read.)

The Court: What I mean is, did you ask Clutter whether Oliver had said so?

Mr. Richey: Yes, sir.

The Court: Did Clutter deny it?

Mr. Richey: Clutter denied that Oliver told him.

The Court: Well, if that is the fact he may answer.

A. I did not.

The Court: That is the reason Clutter gave to the Court why he didn't do anything about it.

Mr. Richey: Why he didn't file a patent application.

Q. When did you first learn that Mr. Downie had a patent on this drop-bottom ditcher construction?

Mr. Zane: We object as irrelevant and immaterial.

The Court: Objection sustained.

Q. Do you remember an instance when some one called you up on the telephone and gave his name as Bernard Ross?

A. Yes, sir.

Q. When was that?

A. In 1929.

Q. And he invited you to come down to the hotel to see him, didn't he?

A. Yes.

Mr. Zane: We object as irrelevant and immaterial. If they are going to contradict Mr. Clutter they have got to put the contradicting questions to him.

Mr. Richey: Can't I lay the foundation for the questions?

The Court: Well, I suppose you can if it contradicts anything Clutter affirmed or denied. It may be put to him directly to rebut. Did Clutter deny that telephone call?

Mr. Zane: That is not the point. He was asked if he didn't say a certain thing to Mr. Oliver, and when they put that question, if they do put it, then I will object. This is positively not contradiction.

The Court: It is leading up to it, I suppose. Did he have some talk?

Mr. Richey: Yes, he went down to the hotel, and had some talk with Clutter.

The Court: Bring it down to that, to the conversation there and anything asked Clutter as having taken place.

Q. You went to the hotel, did you?

A. Yes, sir.

Q. And who did you find there?

A. B. R. Clutter.

Q. Now, did he tell you at that time that he was organizing a sales company for this ditching machinery?

A. Yes, sir.

Mr. Zane: That is not contradictory; that is affirmatory.

The Court: Yes, he said that.

Q. If he offered you a position, at what salary did he offer it?

Mr. Zane: We object.

The Court: Objection sustained.

I don't think Clutter was asked anything about that.

Mr. Richey: I think he said he didn't offer him a salary of $5,000. Clutter did say that.

Q. Well, did he offer you a salary at $5,000.00 at that time or more?

A. He said yes, that would be the salary if I accepted the position.

Q. You stated that you had Mr. Herb Wallower execute an affidavit?

A. I did.

Q. And do you remember about when that was?

A. No, I don't remember the year exactly.

Q. Will you state the circumstances under which this affidavit was executed?

Mr. Zane: We object.

The Court: What is the relevancy of that?

Mr. Richey: On this question of alleged suppression. For instance, here is an affidavit of Mr. Wallower saying that this thing was a failure and they never got it right and abandoned it. Now, if the thing was an abandoned experiment, why it would not make any difference whether any suppression or not, because it has nothing to do with this. In other words, if I take the position of counsel, and these were brought to me, these affidavits, counsel has to weed out the sheep from the goats in preparing the case on the facts to the court. After the thing is all over—it is a typical case, coming along with an old abandoned experiment and trying to make a public use of it,—all kinds of charges back and forth. And here is the thing that Mr. Downie and I acted upon in not bringing it to the

attention of plaintiff's counsel before this case was tried. Your Honor knows that plaintiff's counsel cannot come in and say, "Here, you should have relied on this; you should have relied on that,"—it would be limitless. This was to show what the situation was at that time.

The Court: Is that the way to get in the evidence, though? You don't think you can get it in that way?

Mr. Richey: I am not offering it; I am just proving the paper. It is in the Toledo case.

Mr. Zane: But this paper,—this is an *ex parte* statement made by Wallower. Wallower is a witness. Now, it has got to be offered either to contradict him or to support him, I suppose. Now, they do not show that they drew Wallower's attention to this matter and that this paper was used to contradict him. That is the only way they could bring it in.

Mr. May: If the court please, as I understand the law, any matter of report that is acted upon by any person may be offered in evidence, not as evidence of what may be in the statement, but as knowledge of what the person acted upon, such as a Dun & Bradstreet's report. It can be offered as evidence upon which a person based a certain finding. We expect to offer it later for that same purpose.

The Court: But Oliver didn't take any action on the affidavit or prepare it.

Mr. Richey: Oliver obtained it, and he executed it, and that is what we want to show.

The Court: I don't see yet how you can put the affidavit in evidence.

Mr. May: Not as to the truth of the facts in it, but as to the basis of Mr. Downie's action and the attorney's action.

Mr. Zane: Let me ask the question: Was Mr. Wallower's attention called to that when he was on the stand in the deposition?

Mr. Richey: No, this question of suppression wasn't brought out. It wasn't in issue at that time.

Mr. Zane: We are not talking about suppression; we are talking about evidence on the Joplin use.

Mr. Richey: We are talking about suppression, too.

Mr. Zane: In regard to the Joplin use, did you draw Wallower's attention to this affidavit in the Osgood case when he was on the stand?

Mr. Richey: No, we are not offering it for that purpose.

The Court: Well, I will sustain the objection. You may take an exception and put into the record what you expect to prove, and in that way you can save the question.

Mr. Richey: We offer to prove—

Mr. Zane: I think the best way is perhaps to attach the affidavit to the record.

The Court: No, they want to offer some questions about it.

Mr. Richey: We offer to prove that Mr. Oliver, this witness, received an affidavit from Beaver Falls, Pennsylvania, and went to see Mr. Wallower and showed him the form of an affidavit that had been prepared and Mr. Wallower was at a golf club and he looked the affidavit over and made certain changes in it in pencil, and then that he and Mr. Oliver—

Mr. Zane: Where is the pencil?

Mr. Richey: —went and had it rewritten into the form, including the changes that had been made by Mr. Wallower, and then Mr. Wallower executed it, before a notary. Mr. Oliver saw him sign it and saw it executed. It was then mailed to the Keystone Driller Company at Beaver Falls, and that he would identify this affidavit which I produced, dated May 8, 1925, identify it as that affidavit. And I ask that it be marked for identification as Plaintiffs' Exhibit P-73.

Mr. Zane: Well, if your Honor please, I will withdraw my objection to that, if they claim that, that any effect is to be given to it, I will withdraw my objection and let it go in, the affidavit.

Mr. Richey: Do you withdraw your objection to the testimony?

Mr. Zane: Well, I think that is, that it came from Beaver Falls and that the other that you stated, may be considered as testified to.

Mr. Richey: You have no objection to the certified copy being put in and substituted for the original?

Mr. Zane: No, not at all.

Q. Going back to this special bucket that was used as a ditcher bucket on that machine at Joplin, what if any side rake teeth did that bucket have on it when it was used?

Mr. Zane: I object as immaterial.

The Court: He may answer.

A. It didn't have any.

Q. What if any protections did it have for the pivots of the bottom.

A. It didn't have any.

Q. What kind of stick was used?

A. You mean the ditcher stick, what we call the ditcher stick?

Q. Yes.

A. Why, it was an I-beam.

Q. What was the nature of the connection between the upper end of the stick and the hoisting line?

A. I don't know as I get what you mean.

Q. Well, did they have a link connecting the upper end of the stick to the hoisting line, the upper end of the I-beam?

A. Well, they had—yes, they did, and it fastened onto the boom.

Q. Was that a straight link or angular link?

A. I couldn't say. I don't remember how that was attached.

Q. State whether or not they had at any time an automatically engaging latch on the bucket?

Mr. Zane: We object.

The Court: Is that the point involved?

Mr. Richey: That is one of the points.

Mr. Zane: It cannot be a point involved, because the latch is a mere detail of the machine.

The Court: Well, it is one of the details entering into the machine.

Mr. Richey: They never had a successful latch, and that is one of the reasons they abandoned it.

Mr. Zane: The latch is the thing they go and buy.

The Court: Yes; but a drop-bottom has to have a latch of some kind.

Mr. Zane: This did have a latch.

The Court: It has to be capable of being opened and closed.

Mr. Richey: They never had a successful latch and that is one of the reasons it was dropped.

Mr. Zane: We object, as to his conclusion as to "successful". That has nothing to do with the patent. I mean the invention, the mere success of it.

The Court: You are only talking about whether it had a latch?

Mr. Richey: That is what I asked him. He is objecting to me instead of the witness.

(Previous question read by reporter.)

Mr. Zane: We object to "automatically engaging latch".

The Court: He may answer.

A. No.

Q. I call your attention to the scoop shown in the Clutter patent 1,107,899, and ask you to state whether or not the Keystone Company ever made such a scoop as part of their commercial product.

A. No.

Mr. Richey: I think that is all.

Cross Examination by Mr. Zane:

Q. Mr. Oliver, what position did you hold in the year 1927?

A. Assistant manager.

Q. And in charge at Joplin?

A. Well, yes, as assistant, yes.

Q. And what was your next position?

A. Well, I am still there, the same position.

Q. But you were dropped, weren't you?

A. No, sir.

Q. Wasn't there a time when you weren't working for the Keytsone?

A. Absolutely not.

Q. You have been assistant Manager all the time?

A. Since 1926 or '27.

Q. And what were you—what was the time you were dropped by the Keystone?

A. I never was dropped.

Q. Were you reduced?

A. Except was reduced from manager down to assistant manager.

Q. When was that?

A. I think that was along in 1926 or 27. I had a great deal of trouble with my eyes.

Q. You were reduced to assistant manager?

A. I wasn't physically able to go ahead with the work.

Q. At the time the case was tried over at Toledo before Judge Hahn against the Osgood Company, you did not testify, did you?

A. No.

Q. And were you at that time working for the Keystone Company?

A. Yes, sir.

Q. What were you doing?

A. The same position that I have had since 1926 and '27.

Q. Assistant manager?

A. Yes.

Q. Now, you say these two machines that had been used with the pivoted buckets were disposed of?

A. Yes, sir; that is, disposed of as skimmer buckets.

Q. Do you know what became of the scoops that had been rigged up as pivoted drop-bottom scoops?

A. Yes, sir.

Q. What became of them?

A. They were both converted back to skimmer buckets in their original state.

Q. That is,—

A. After Wallower was through with them.

Q. That is, the scoops were turned into skimmers?

A. Yes, sir.

Q. And how was that done?

A. Why, just simply changing them back to their original shape.

Q. Well, you had to do some bolting?

A. Oh, yes, took these braces off that were on there.

Q. Took off what was on?

A. And put the other latches on, was the only arrangement.

Q. What became of them?

A. One of them was sold to a machine that went down to Ardmore, Oklahoma.

Q. What became of the stuff you took off?

A. Oh, I suppose it was scrapped.

Q. Did you change the ditcher stick?

A. We hadn't any occasion to change the ditcher stick.

Q. And you didn't change that?

A. No.

Q. Nothing else was changed except the scoop?

A. We didn't have any use for the ditcher stick after that.

Q. And what did you convert those ditching machines into? You say you took off the scoop and put on a skimmer. What other change at that time did you make?

A. That is all the change we made, sold them as regular excavating machines.

Q. Instroke?

A. Either instroke or outstroke. One of them went out with the skimmer bucket on and the standard ditcher.

Q. Now, you had the machinery that connected with the scoop; did that remain the same when you changed the scoop?

A. You mean the ditcher stick?

Q. Oh, yes.

A. Well, the ditcher stick was abandoned, scrapped.

Q. You took it off?

A. Yes.

Q. And put on a new one?

A. Didn't have to put on a ditcher stick on that when it was changed to a skimmer, but just simply converted.

Q. That then was a ditcher machine that a man wanted that would use a scoop?

A. Yes, sir.

Q. A skimmer scoop?

A. Yes, sir, sold as a skimmer scoop.

Q. Now you say you didn't report this thing to the head office in Beaver Falls?

A. No, sir.

Q. You didn't make any written report; is that what you mean?

A. Either written or verbal.

Q. Neither written nor verbal?

A. I wasn't down to Beaver Falls office during 1920 or 1921, a year.

Q. Did you ever tell anybody of the Keystone Company about this use of Clutter?

A. Oh, in a general way it was talked of by the men who had seen it there; but it was dropped as far as I was concerned afterwards.

Q. Did you talk about it with anybody?

A. No.

Q. Did you mention it to anybody connected with the Beaver Falls office?

A. No, sir.

Q. You saw some photographs of this scoop, didn't you?

A. Oh, I saw some kodak pictures.

Q. They are photographs?

A. Yes; so little you can't tell much about them.

Q. They were taken by Phil Culbertson?

A. Well, I think he did; I wouldn't say who did take them. There were a few taken. I don't know what became of them. They weren't considered of any value by me.

Q. Don't venture anything except what you are asked. Did you send any of those to Beaver Falls?

A. No, sir.

Q. Did anybody from Beaver Falls see any of these photographs that you know of?

A. Well, they might have seen them in the last few years.

Q. Well, at that time?

A. No, not at that time they didn't.

Q. And you don't know what became of those photographs at all?

A. No, I don't know where they are at.

Q. They were at the office of the Keystone Driller Company in Joplin, weren't they?

A. They might have been. Culbertson had them. He might have been using them, as we used photographs in our sales department.

Q. Culbertson was in your employ?

A. He was a salesman, yes.

Q. Now, you had some photographs taken yourself?

A. Absolutely not, I did not.

Q. Are you sure of that?

A. I am absolutely sure of that.

Q. Now, did you ever have any conversation with Rex Downie at all in regard to this Joplin use out there?

A. Between what years?

Q. I asked you if you ever had.

A. Oh, in the last few years, yes.

Q. When first?

A. I think it was 1921.

Q. Where?

A. At his office.

Q. At Beaver Falls?

A. Yes.

Q. What time of the year?

A. January.

Q. How long after that did you apply for the patent?

A. I couldn't tell you.

Q. Now, in January, 1921 you talked about this Joplin use to Rex Downie; is that true?

A. It might have been mentioned there; I wouldn't say we talked very much about it.

Q. Well no. But anyway you talked about it, didn't you?

A. Oh, I presume it was mentioned. We didn't go into details.

Q. What do you mean by "details"?

A. Well, the general plan of the work and how it worked, and all that.

Q. But you did tell him about what Clutter had done out there with that?

A. No, I didn't tell him what Clutter had done.

Q. But you told him about the use of that machine at Joplin?

A. I told him it had been used there; we had used such a machine.

Q. Now, you had gone on to Beaver Falls on business?

A. Sales convention, yes.

Q. Where was Rex Downie; what was he doing?

A. You mean his position at that time?

Q. Yes.

A. Why, he was assistant secretary and assistant general manager, I believe, at that time; I wouldn't say for sure.

Q. Now, who sent you that affidavit to have Wallower sign?

A. Well, of course this wasn't the original.

Q. Well, who sent you the affidavit?

Mr. Richey: Let him answer.

Q. Who sent you the affidavit?

A. Mr. Rex Downie.

Q. And it came to you as a drawn-up affidavit?

A. Subject to any change Mr. Wallower might make.

Q. And you saw that it had Downie's mark on it, an affidavit addressed to "To whom it may concern"; you noticed that, didn't you?

A. Yes.

Q. And have you ever seen an affidavit before?

A. Yes.

Q. Had you ever seen "To whom it may concern" on an affidavit before?

A. Yes.

Q. You have?

A. Yes.

Q. Where?

A. Joplin district, in the mining district there they use—

Q. Affidavit drawn up there?

A. To whom it may concern, yes.

Q. You say certain changes were made?

A. In that, yes.

Q. Before it was signed?

A. Yes, sir.

Q. Can you remember them?

A. No, I couldn't; I wouldn't attempt to say what they were. They were minor; one word changed; changed a little. Mr. Wallower and I both talked it over and made it just as though I would want to sign it myself, as he accepted it, as it happened.

Q. Now, how long did you receive this affidavit before you had it signed?

A. Oh, I think I received it one day and went down to see him in the next day or two, probably I 'phoned to him to make sure I would see him in Baxter, and just a day or two received it, and I got in touch with him.

Q. You noticed the date on the affidavit when you received it didn't you?

A. I did at the time, yes.

Q. The date was about the time you received it, wasn't it?

A. Yes.

Q. What is the date on there?

A. Well, there is no date on ours to tell what date we received it.

Q. Read that date. What is that?

A. Well, it is May 3, 1925.

Q. Then when did you have it sworn to?

A. Well, as I said, just a few days after we had received it.

Q. What is the date?

A. September 13.

Q. What year?

A. 1928.

Q. Three years between the date of the affidavit and the date it is

A. Well, as I remember it—

Mr. Richey: There is something wrong about that. That is when the commission of the Notary expired.

The Court: You have taken a lot of time about nothing.

Mr. Zane: The date is May 8. I will withdraw that.

The Court: I will exclude that so it won't confuse. The 1928 referred to is the date of the expiration of the notary's commission.

Q. Now you have testified about this machine. Have you had any practical experience with ditchers out in the field?

A. Yes, I have been selling them since the time they put them on the market.

Q. You have been selling them?

A. Yes.

Q. Have you ever used one?

A. No, I never operated one.

Q. What mechanical experience have you had?

A. Nothing more than a general observation as to the use and what is required to put them in the field.

Q. And selling the machine?

A. That is all.

Q. Never had any connection with the use of them?

A. No, I never use any.

Q. Do you know F. W. Ransom?

A. Yes, sir.

Q. What was his place at Joplin at the time this use took place, this Joplin use in 1919?

A. He never was connected with the Joplin office.

Q. Was he out there at that time?

A. Oh, he made visits out there, yes.

Q. What was his connection with the Joplin office?

A. Well, he was assistant general manager, I believe, at that time.

Q. Assistant general manager from Beaver Falls?

A. Yes, sir.

Q. Was he over you?

A. Yes, sir.

Q. And he visited there on inspections; that is F. W. Ransom?

A. Yes, sir.

Q. And that is the same F. W. Ransom who made a deposition in this case?

A. I don't know.

Q. Or in the case at Toledo?

A. I didn't know that he did.

Q. Now, Mr. Ransom, the assistant general manager from Beaver Falls, was out there and saw that machine in operation, didn't he?

A. He saw the machine in operation, but I couldn't say that we had this drop-bottom bucket there at that time.

Q. You can't say that?

A. I don't know just what time that he was there. He was there in the spring, in the winter some time during that work.

Q. But give me your best judgment as to whether he was there when the work was being done by that drop-bottom bucket, or those drop-bottom buckets.

Mr. Richey: I object to that. He said he didn't know.

A. I don't know what time of the year he was there.

Q. You couldn't form any judgment?

Mr. Richey: I object to it.

A. I said he was there during the spring; but whether or not he was there during that time or not, I couldn't say.

Exhibits B, C and D — Frank Oliver

Q. Did you talk with him about the drop-bottom bucket?

A. Not at that time.

Q. Did he say anything to you about it?

A. Not that I recollect.

Q. When did you talk with him about the drop-bottom bucket?

A. Oh, it may have been two or three years after that.

Q. Where was it?

A. Well, I couldn't tell you that, whether it was at Joplin or whether it was at Beaver Falls.

Mr. Zane: I think that is all.

RE-DIRECT EXAMINATION by Mr. Richey:

Q. You have seen this ditcher and other excavating machines operating in the field, haven't you?

A. Yes, sir.

Q. Over what period have you seen them?

A. Oh, since, I would say, 1914 or 15.

Q. Down to the present time?

A. Yes.

Q. Do you remember when the Keystone standard drop-bottom ditching machine first came out on the market?

A. Why, it was along in '15 or '16, as I recall it.

Q. No. I mean the one with the drop-bottom as distinguished from the dump-bottom.

A. But you asked about the standard.

Q. Yes.

A. Oh, the drop-bottom didn't come out until, oh, I would say it was 1923 or '24, somewhere along there. I haven't anything to fix that in my mind right now.

Q. You don't remember just when that was. Do you remember whether or not you saw any machine like that when you were in Beaver Falls in January, 1921?

A. No.

Q. Do you remember whether or not it was in the catalogue of the Keystone Driller company that came out about January, 1921?

Mr. Zane: We object. The catalogue is the better evidence.

The Court: He may answer.

A. Whether it was catalogued?
Q. Yes.
A. No.
Q. You don't remember?
A. No.

Mr. Richey: That is all.

Thereupon JOHN L. BURDGE being called as a witness by plaintiff and first duly sworn, testified as follows:

DIRECT EXAMINATION by Mr. May:

Q. Mr. Burdge, where do you live?
A. I live in Lakewood, New Jersey.
Q. Your age, please?
A. My age, 33.
Q. And what is your occupation?
A. Chief clerk of the sheriff's office, Toms River.
Q. Do you hold any other office or commission in the State of New Jersey?
A. Notary Public.
Q. How long have you held that commission?
A. Since January, 1925.
Q. How long have you known Bernard Clutter?
A. Since about 1923.
Q. Were you intimately acquainted, associated or connected with him prior to April, 1925?
A. Not beyond both of us working for the same sheriff in the campaign; that is all, 1924.
Q. Do you recall taking an affidavit of Bernard Clutter? I show you Exhibit 113-A and 113.
A. (after examining same) I do.
Q. Is that your signature to those papers?
A. That is my signature, which was taken in duplicate, duplicate affidavits.
Q. Do you recall who was with Mr. Clutter at the time these affidavits were taken?
A. The only one I can particularly recall being in the office was former Sheriff Grant.
Q. Do you recall where that affidavit was taken?

A. It was taken in the sheriff's office at the court house at Toms River.

Q. Exhibit 113-A. I show you again the seal at the lower right hand corner, second sheet. What seal is that?

A. That is my own notorial seal.

Q. Do you recall whether there are any men in the room here that were with Mr. Clutter at that time?

A. I recall there was some men with him. There has been some men down to see me since about it, some time ago, but I don't just recall who.

Q. You wouldn't undertake to—

A. I recognize Mr. Downie as having been there once and this gentleman sitting next to him, too, but on which occasions I don't know.

Q. If Mr. Downie was in there only once, then he was there at that time; is that correct?

A. I wouldn't say. I know he was there once, but I don't whether since then or at that time.

Q. I say if he was there only once, it was at that time?

A. Yes.

Mr. Richey: The gentleman sitting next to Mr. Downie is Mr. Elmire. Just stand up. Is this the man you refer to?

The Witness: Yes.

Q. Howard Elmire. Do you remember if there were some men with Mr. Clutter at that time?

A. Yes, I do.

Q. Exhibit 113 bears the date; in whose handwriting is that?

A. That is my handwriting.

Q. And the date at the close?

A. That is my handwriting.

The Court: What is that date in each case?

The Witness: April 16.

Q. Exhibit 113 bears a similar date at the heading. In whose handwriting is that?

A. That is my writing.

Q. And at the close?

A. At the close it is somebody else's, apparently filled in before I took the affidavit.

Q. But the same date?

A. The same date, yes.

Q. Do you remember whether or not the affidavit was read to or read by Mr. Clutter before it was signed?

A. To the best of my recollection it was. In fact I wouldn't take anybody's affidavit unless the contents was known to him.

Mr. Zane: I move to strike it out, that he wouldn't take anybody's affidavit unless he read it.

The Court: Probably that is not responsive. I will exclude it.

Q. Did you administer an oath to Mr. Clutter?

A. I did.

Mr. May: That is all.

Cross Examination by Mr. Zane:

Q. You inserted the date in one of these copies?

A. I did, sir.

Q. That date is inserted in the copy marked "Defendant's Exhibit 113"?

A. Yes, sir, both those dates are in my handwriting.

Q. Who inserted the date in the other affidavit so far as you know?

The Court: You mean at the close or at the heading?

A. At the heading I did; at the bottom, I didn't; I don't know who did.

Q. It had that date in it when it came?

A. It had it in when it came.

Q. The other one didn't have the date in it when it came?

A. No, sir.

Q. Did you know that both affidavits were the same?

A. I probably did. I did, sure, I did.

Q. Now, what makes you sure, and "I probably did and may be I didn't"?

A. I say I did; yes, I knew they were the same paper.

Q. Did you administer two oaths or one?

A. I don't recollect.

Q. You don't remember?

A. No, sir.

Q. Now, the place was Lakewood?

A. No, the place where these affidavits were taken was Toms River.

Q. How did you transfer your notarial functions from Lakewood to Toms River?

A. The certificate in the State of New Jersey is good anywhere in the state.

Q. Anywhere in the state?

A. Yes, sir.

Q. And a notary there acts outside of his own county?

A. Oh, yes, anywhere in the state; that is in the same county, though, both of these towns.

Q. Now, did Mr. Clutter sign both of these affidavits in your presence?

A. He did. On the big desk right in the front of the office. I distinctly remember.

Q. Of his signing both?

A. I do.

Q. Now, isn't it possible that he might have signed there (indicating)?

A. No, sir.

Q. Do you know whose handwriting that is in one of these copies, the date at the end?

A. No, sir, I don't know in whose handwriting the date is but I know that is my signature at the bottom.

Q. Did you or did you not know Mr. Downie's handwriting?

A. No, I don't.

Mr. Zane: That is all.

EXHIBIT "F"

This cause having come on before this Court and being submitted on the Order of the United States Circuit Court of Appeals dated October 15, 1931, and the cause having been reopened to consider additional evidence relating to the validity of the Downie patent No. 1,511,114, and upon the question of alleged suppression of evidence and its effect upon the decree heretofore entered in this Court sustaining all of the patents involved in the case, and this Court having heard and considered all of the evidence offered by the respective parties upon this subject consisting of the testimony given in open Court by the following witnesses:

Bernard R. Clutter
Horace B. Fay
Henry C. Beckwith
Velcair C. Smith
Charles P. Smith
Frank Oliver
Robert Rex Downie
John L. Burdge

and having considered carefully the depositions of

Bernard R. Clutter (dated Feb. 24, 1930)
Herbert Wallower
Phil Culbertson
John Cummings
M. A. Elsner
Lysle Hazen
Howard Elmire
Frederick W. Ransom

stipulated from the Toledo cases, Keystone Driller Company v. The General Excavator Company, Equity No. 964, and Keystone Driller Company v. The Osgood Company, Equity No. 965, having heard counsel and considered briefs filed by the respective parties and having handed down its opinion dated March 24, 1932 upon this subject, it is hereby ordered, adjudged and decreed as follows:

(1) That Letters Patent of the United States to Robert Rex Downie, No. 1,511,114, dated October

7, 1924, for Excavating Machine, is good and valid in law as to all of the claims thereof; that the inventor, Robert Rex Downie, named in said patent, was the first true and original inventor of the inventions, improvements and combinations described in said patent and in said claims;

(2) Neither the said Robert Rex Downie nor the Plaintiff, Keystone Driller Company, has suppressed evidence materially affecting the Defendants' rights prior to the first trial in this case upon the question of whether or not the said Robert Rex Downie was the first, true and original inventor of the inventions, improvements and combinations of said patent.

And the said Defendants except to each of said findings separately and to each and every part thereof.

And it is further ordered that the said evidence so taken, and the written opinion heretofore rendered by the Court, and the findings and journal entry in this case above recited be returned by the Clerk of this Court to the United States Circuit Court of Appeals of the Sixth Circuit in accordance with the order of said Court of Appeals.

JONES,
United States District Judge.

Approved as to form
FAY, OBERLIN & FAY,
Counsel for Defendants.

NOTICE AND PROOF OF SERVICE OF MOTION TO VACATE SUPERSEDEAS

(Filed April 13, 1932)

Corbett & Mahoney,
820 Huntington Bank Bldg.
Columbus, Ohio

Mr. Edward L. Reed
Riebold Building
Dayton, Ohio

Please take notice that on April 18, 1932 or as soon thereafter as counsel may be heard we will submit to the United States Circuit Court of Appeals for the Sixth Circuit the Keystone Driller Company's Motion to Vacate the Supersedeas in the above cases, together with Exhibits A to F inclusive, copies of which Motion and Exhibits were mailed to you Saturday, April 9, 1932.

RICHEY & WATTS,
Counsel for Keystone Driller Co.

AFFIDAVIT OF SERVICE

STATE OF OHIO, }
COUNTY OF CUYAHOGA } ss.

H. F. McNenny, being duly sworn, deposes and says that he is associated with Richey & Watts, counsel for the Keystone Driller Company; that a copy of the foregoing Notice was this day mailed by him to each of:

Messrs. Corbett & Mahoney
820 Huntington Bank Building
Columbus, Ohio

and

Mr. Edward L. Reed
Riebold Building
Dayton, Ohio;

and that a copy of the Motion to Vacate the Supersedeas referred to in said Notice and of Exhibits A to F inclusive referred to therein was mailed by him to each of Messrs. Corbett & Mahoney and Edward L. Reed at the above addresses on April 9, 1932.

H. F. McNENNY.

Sworn to and subscribed to in my presence this 12th day of April, 1932.

MADGE E. CONTANT,
Notary Public.

My commission expires March 3, 1933.

(NOTARY SEAL)

DEFENDANT'S OPPOSITION TO MOTION

(Filed April 20, 1932)

Now come the General Excavator Company and The Osgood Company, defendants below, by their attorneys and move this Court that Keystone Driller Company's Motions to "Vacate Supersedeas" and to "Proceed with the Accounting" be denied upon the following grounds:

1. That the trial court in the exercise of its sound discretion found at the time of allowing of the appeals herein, that defendants were entitled to supersedeas suspending the injunction and accounting herein pending these appeals.

2. That there has not been since the granting of the orders allowing supersedeas in these cases, any change in the situation of the parties, or of the facts relating to these suits which would warrant the vacation of the orders of supersedeas previously granted herein.

3. That the plaintiff will suffer no injury by the continuance of supersedeas pending these appeals because the trial court on refusing to grant preliminary injunctions herein against these defendants, had required them to file large bonds to cover any profits or damages that might accrue by reason of any alleged infringement up to and including the time of the entry of the decree herein. In addition to these bonds and as a condition for the granting of the orders of supersedeas the trial court required each defendant to file an additional bond to protect the plaintiff for any damages or profits that might accrue during the pendency of these appeals.

The action of the trial court was in accordance with the practice laid down by this court in the case of *Vacuum Oil Company* v. *Grabler Manufacturing Company*, 53 Fed. (2) 975.

On the other hand, the defendants would be irreparably injured if the orders of supersedeas were vacated and this court later found that the patents were invalid or not infringed, or if this court held that plaintiff was not entitled to any relief herein because of its unclean hands.

4. That the depositions and papers attached to plaintiff's Motion to Vacate Supersedeas herein, and

upon which it bases its motion, were offered in another case, before a different court against different defendants than those at bar, and that such evidence is therefore not competent in these cases against these defendants for any purpose.

5. That even if the depositions and papers offered in support of plaintiff's motion were competent in these cases, all of the evidence adduced at the rehearing before Judge Jones originated in the cases at bar and all said evidence was before Judge Hahn when he rendered his decisions and allowed supersedeas herein, except for the testimony of two or three witnesses. As to these additional witnesses, their connection with these cases was known and referred to in the trial of the cases at bar before Judge Hahn at Toledo, and he held that the failure of plaintiff to produce them, when they were available, operated strongly against plaintiff's case.

In addition to this, the testimony of these additional witnesses before Judge Jones at Cleveland did not, in any material respect either change the effect or bring in any new or additional facts that were not before Judge Hahn in the cases at bar, or bring about any change in the situation of the parties to this suit since the appeal was taken and supersedeas allowed.

6. That the affidavit of Robert Rex Downie on which plaintiff also bases this motion, is except for the last paragraph or so, part of the same affidavit almost word for word that was offered by plaintiff in these cases on plaintiff's motion for preliminary injunction. (See affidavit of Robert Rex Downie, R. V. I, pp. 21 and 22 and pp. 109 and 110.) The same facts are contained in this affidavit that were before the court when it refused to grant a preliminary injunction, and which were also before the court below when it granted the plaintiff an order of supersedeas pending these appeals.

In addition to this, it is apparent from both the decisions of Judge Jones and Judge Hahn that Robert Rex Downie has been guilty of inexcusable and highly reprehensible conduct in an effort to suppress and keep from this court and the court below, evidence bearing upon the invalidity of Downie patent 1,511,114 in suit. The affidavit of Downie, therefore, cannot be relied upon.

7. That the defendants are not responsible for any delay in the prosecution of these suits, because they have

promptly presented their defenses, and have at all times cooperated with the Court and opposing counsel to bring these cases quickly to a final issue.

8. That in addition to the fact that these motions should be denied upon their merits for the reasons given above, they should also be denied because to grant them would be to violate the orderly rules which have been established in the Federal Courts for the proper procedure on appeal. For instance, both motions request that the questions involved be sent back to the trial court for reconsideration, whereas it is well established that after appeal to this court the trial court has no further jurisdiction of these questions until the appeal is decided.

After having brought its "Motion to Vacate Supersedeas", herein the bringing of the second "Motion to Proceed with Accounting" was unnecessary and superfluous and probably was brought merely to harass defendants because upon vacation of supersedeas the right to proceed with accounting would automatically follow.

For the above reasons, it is therefore respectfully submitted,

1. That the motions of the plaintiff herein should be denied.

2. That the costs of these motions should be assessed against the plaintiff.

3. That the testimony and other papers submitted with these motions, and attempted to be improperly brought into this record, be stricken from the files.

Respectfully submitted,

CORBETT & MAHONEY,
Attorneys for Defendants, The General Excavator Company and The Osgood Company.

April 19, 1932.

ORDER DENYING MOTION TO VACATE SUPERSEDEAS

(Filed May 13, 1932)

This cause came on to be heard on motion of Keystone Driller Company, appellee, to vacate the orders entered by the District Court on July 29, 1931, granting supersedeas and suspending the injunction, and to instruct the District Court to issue injunctions as provided in paragraph 5 of the respective interlocutory decrees, or in the alternative to give permission to appellee to present this motion to the District Court and authorize it to reconsider the question of supersedeas and of issuing injunctions; and it appearing that appellants have in compliance with the orders of the District Court executed appeal bonds to operate as a supersedeas and that in the opinion of the court there has been no such change in the situation since the entry of the decrees appealed from as to reasonably require the granting of said motion,

It Is Therefore Denied.

(Signed) Xen Hicks,
Circuit Judge.

CAUSES ARGUED AND SUBMITTED

(October 4, 1932—Before: Hicks, Hickenlooper and Simons, JJ.)

These causes are argued by F. O. Richey and C. R. May for Keystone Driller Company and by E. P. Corbett and L. T. Williams for General Excavator Company and The Osgood Company and are submitted to the Court.

DECREE No. 6065

(Filed December 6, 1932)

APPEAL from the District Court of the United States for the Northern District of Ohio

THIS CAUSE came on to be heard on the transcript of the record from the District Court of the United States for the Northern District of Ohio, and was argued by counsel.

ON CONSIDERATION WHEREOF, It is now here ordered, adjudged and decreed by this Court that the decree of the said District Court in this cause be and the same is hereby reversed and the cause remanded with instructions to dismiss bill of complaint without prejudice. Costs are taxed against the Keystone Driller Company.

DECREE No. 6066

(Filed December 6, 1932)

APPEAL from the District Court of the United States for the Northern District of Ohio.

THIS CAUSE came on to be heard on the transcript of the record from the District Court of the United States for the Northern District of Ohio, and was argued by counsel.

ON CONSIDERATION WHEREOF, It is now here ordered, adjudged and decreed by this Court that the decree of the said District Court in this cause be and the same is hereby reversed and the cause remanded with instructions to dismiss bill of complaint without prejudice. Costs are taxed against the Keystone Driller Company.

DECREE No. 6067

(Filed December 6, 1932)

APPEAL from the District Court of the United States for the Northern District of Ohio.

THIS CAUSE came on to be heard on the transcript of the record from the District Court of the United States for the Northern District of Ohio, and was argued by counsel.

ON CONSIDERATION WHEREOF, It is now here ordered, adjudged and decreed by this Court that the decree of the said District Court in this cause be and the same is hereby reversed and the cause remanded with instructions to dismiss bill of complaint without prejudice. Costs are taxed against the Keystone Driller Company.

DECREE No. 6068

(Filed December 6, 1932)

APPEAL from the District Court of the United States for the Northern District of Ohio.

THIS CAUSE came on to be heard on the transcript of the record from the District Court of the United States for the Northern District of Ohio, and was argued by counsel.

ON CONSIDERATION WHEREOF, It is now here ordered, adjudged and decreed by this Court that the decree of the said District Court in this cause be and the same is hereby reversed and the cause remanded with instructions to dismiss bill of complaint without prejudice. Costs are taxed against the Keystone Driller Company.

OPINION

(Filed December 6, 1932)

Before Hicks, Hickenlooper and Simons, Circuit Judges.

Hickenlooper, Circuit Judge: The above-numbered appeals and cross-appeals are founded upon two almost identical actions commenced in the District Court for the Northern District of Ohio, respectively against the General Excavator Company and the Osgood Company, and alleging infringement of five separate patents owned by the Keystone Driller Company, one of which was patent to Robert Rex Downie, No. 1,511,114, granted October 7, 1924, which was held valid by this court November 5, 1930. *Byers Mach. Co.* v. *Keystone Driller Co.*, 44 F. (2d) 283.

The bills of complaint in the present actions were filed after the decision of the Byers case in the District Court and while the appeal in that case was pending here, but the Downie and Clutter patents which had been upheld by the District Court were treated by plaintiff as adjudicated patents and motions for interlocutory injunctions were forthwith made and pressed. These motions were denied, but in lieu of granting them the defendants were required to give bonds conditioned upon the payment of all profits and damages which might be decreed against them, and such bonds were in fact given. In this respect and to this extent the decision of the District Court in the Byers case became an important factor in the prosecution of the present actions. Later, when this court affirmed the decree of the District Court, the effect of the Byers case became even more apparent.

We come, then, to the issue which, in our opinion, is decisive of the present appeals. Prior to the grant of the Downie patent No. 1,511,114, indeed, prior to the application for that patent, Downie heard of a possible prior use at Joplin, Mo., during the winter of 1919-1920, by one Bernard R. Clutter, a brother of the patentee of the Clutter patent in suit. Downie himself testified that his own conception of the device of his patent was in the summer of 1920; so that the information which he had received at least cast serious doubt upon the validity of any patent which might subsequently be issued to him, whether the prior use were ultimately to be con-

sidered as an abandoned experiment or not (and he was advised by his counsel that it might be so considered), and whether or not he might be granted priority in any interference declared by the Patent Office, under the doctrine of *Mason v. Hepburn*, 13 App. D. C. 86; Cf. *Westinghouse Elec. & Mfg. Co. v. Wadsworth Elec. Mfg. Co.*, 51 F. (2d) 447 (C. C. A. 6). Notwithstanding this information, and without thorough investigation of the facts, Downie proceeded to file his application for patent and the same was prosecuted to issue on October 7, 1924.

The Downie patent having issued and the action against the Byers Machine Company being in contemplation, doubt and uneasiness as to the effect of the Joplin use was revived. Counsel advised further investigation, and early in 1925 Downie went to Lakewood, N. J., to interview Bernard R. Clutter. It can not be disputed upon any reasonable construction of the evidence here that as a result of this interview Clutter was offered a merchandise credit of approximately $3800, perhaps $4000, being one-half of the cost of a Keystone excavator to be purchased by him, of which credit fifty per cent was to be enjoyed forthwith, and the other half was to be given if within two years any of the claims of patent No. 1,511,114 were held to be valid by a District Court. Clutter signed an affidavit prepared by Downie to the effect that the Joplin use was an abandoned experiment and agreed to assign to the Keystone Driller Company any rights which he might have as inventor or co-inventor of the device covered by the patent; but it is quite obvious that the credit which had been agreed upon was given to Clutter upon the implied condition that he should keep secret the details and circumstances of that prior use—that so far as he was able to produce this result the evidence which caused the patentee uneasiness was to be suppressed.

The full amount of the initial credit was not given immediately, but in January, 1927, we find the Keystone Driller Company cancelling four of Clutter's notes amounting in all to $1700 exclusive of interest. Eighteen months thereafter Clutter became financially unable to perform further the terms of his agreement for the purchase of this and another excavator. He was in default upon his notes and the company was threatening repossession proceedings. Bankruptcy threatened. The District Court had not yet decided the Byers case, so that

the second installment of credit was not yet due; but it would seem that the parties considered the continued silence of Clutter as essential, for in November, 1928, Downie agreed to pay in cash one-half of the second installment of the promised credit, inasmuch as the excavators were being repossessed. One-half of the promised amount of cash was paid by check November 15, 1928, but again, "the other half of the contingent cash credit was not to become payable until and unless our case [the Byers action] should be satisfactorily decided by the end of 1928." The decree in the Byers case was finally entered January 31, 1929, and it was not until about that time that the payment of any further consideration to Clutter was definitely refused.

The District Court after an exhaustive consideration of the evidence, a more detailed consideration than can here be given, characterized this conduct of the patentee as "highly reprehensible," but refused to apply the maxim that one who comes into equity must come with clean hands because during the course of the taking of testimony all of the above-recited facts ultimately came to light, and therefore, it was said, "there was in no sense a suppression of any evidence in these cases." In the first conclusion of the District Court we thoroughly concur; to the second we can not agree. Obviously, that which subsequently developed could have no effect upon the nature or quality of the plaintiff's antecedent conduct, or upon the right of the plaintiff to seek the aid of a court of equity as of the date of the filing of the bill of complaint. Pomeroy defines the meaning of the maxim as follows: "It says that whenever a party, who, as *actor*, seeks to set the judicial machinery in motion and obtain some remedy, has violated conscience, or good faith, or other equitable principle, in his prior conduct, then the doors of the court will be shut against him *in limine*." Equity Jurisprudence (4th Ed.), § 397. Doubtless a party may be guilty of such unconscionable conduct during the progress of litigation that a court of equity will refuse him further relief, but in respect of antecedent action it is as of the date of the filing of the bill of complaint that his conduct must be appraised. To hold otherwise would be to insure the malefactor against the injurious effects of his misconduct; if the facts were brought to light, there would be no suppression; if such facts were never disclosed, the fruit of the misdeed would

be fully enjoyed. Such can not be the law. Cf. *MacRae* v. *MacRae*, 37 Ariz. 307, 319; *Carrington* v. *Pratt*, 18 How. 63, 67.

The maxim is of so ancient an origin that extended analysis of its scope and effect would seem unnecessary. The doctrine is well stated in *Deweese* v. *Reinhard*, 165 U. S. 386, 390: "A court of equity acts only when and as conscience commands, and if the conduct of the plaintiff be offensive to the dictates of natural justice then, whatever may be the rights he possesses and whatever use he may make of them in a court of law, he will be held remediless in a court of equity." Again, in *Manhattan Medicine Co.* v. *Wood*, 108 U. S. 218, 227, the court adopts the language of the opinion in *Fetridge* v. *Wells*, 4 Abbott (N. Y.) 144, that: "Those who come into a court of equity seeking equity, must come with pure hands and a pure conscience." See also, *Weegham* v. *Killefer*, 215 Fed. 168, aff'd 215 Fed. 289 (C. C. A. 6), and cases there cited. "Any really unconscientious conduct, connected with the controversy to which he is a party, will repel him from the forum whose very foundation is good conscience." Pomeroy's Equity Jurisprudence (4th Ed.), § 404.

This last quotation suggests the principal contention of the plaintiff. It is urged that even if the plaintiff wrongfully suppressed evidence, the effect of such suppression was exhausted with the decision of the Byers case, and thereafter the opportunities to secure such evidence and the relationship of the parties were the same as if no such acts had been performed. Hence, it is said, the wrongful acts, if any, were wholly disconnected with the present controversies and without that direct relation to them which is necessary to constitute a bar. It must be conceded that a court of equity "is not an avenger of wrongs committed at large by those who resort to it for relief" (*Kinner* v. *Lake Shore & M. S. Ry. Co.*, 69 Ohio St. 339), and that the wrongful conduct must be in regard to, or at least directly connected with, the matter in litigation. *Bentley* v. *Tibbals*, 223 Fed. 247 (C. C. A. 2); *Cropper* v. *Davis*, 243 Fed. 310 (C. C. A. 8); Pomeroy's Equity Jurisprudence (4th Ed.), § 399. But the necessary connection is not here missing. As long as it was thought desirable, in order to secure an adjudication upon the patent, the hope of reward for silence was held before Clutter. This was the act of the plaintiff

as much as of Downie, its officer and moving spirit. The only possible effect of such conduct was to suppress Clutter's testimony, or, if the facts came to the knowledge of the defendant, to make him an adverse or unwilling witness. When the adjudication had been obtained, the plaintiff brought the present actions seeking by motion for an interlocutory injunction to avail itself of the advantages so obtained. Perhaps the necessary connection would have been lacking had the plaintiff elected to treat the patent as unadjudicated, or had based its action only upon the other patents in suit. This we need not decide. It is enough that neither of these courses was pursued; and that the wrongful conduct was in regard to and directly connected with one of the matters in litigation, the patent, not simply as a patent, but as an adjudicated one.

The next insistence of the plaintiff is that the alleged misconduct should not be held to constitute a bar since it related to an immaterial matter, the Joplin use being in truth and in fact but an abandoned experiment. At the very least, it is urged, anticipation is not proved with that degree of certainty which is required by the doctrine of *The Barbed Wire Patent*, 143 U. S. 275, 284, and the cases which have followed it. This seems to us to be immaterial. We are not here and now concerned with a question of anticipation, but of conduct, and certain it is that there was enough in the information communicated to Downie to cause uncertainty and anxiety to him and to the plaintiff, and to bring about the action finally taken. If the conduct was reprehensible, it matters not that it was really unnecessary.

The plaintiff also contends that neither in the Byers case nor in the present cases was there any obligation upon it to make disclosure of those possible prior uses which might affect the validity of the patents which it owned. This is true; but there was an obligation, in all righteousness and good conscience, not to do that which was done—not to build up a defense against the supposed prior use by buying an affidavit phrased as plaintiff wished it to be phrased, and possibly not in strict accord with the facts, by purchasing Clutter's silence, or at least making him an adverse witness for others, and by continuing the effectiveness of this course of action by making future gain contingent upon a favorable result of the pending action until the very advantage

which it was intended should be obtained was at last secured.

Under the above-stated principles we are of the opinion that the plaintiff should have been denied relief in a court of equity. The decrees of the District Court are reversed and the causes are remanded with instructions to dismiss the bills of complaint without prejudice to the prosecution of suits at law, or, indeed, to subsequent actions in equity upon the other patents in suit. Possibly the plaintiff may now have the right to commence anew an action in equity upon all the patents, including patent No. 1,511,414. Upon this we express no opinion. Costs are taxed against the Keystone Driller Company in each of the four appeals now decided.

PETITION FOR REHEARING

Filed January 5, 1933

INDEX.

Petition for Rehearing 1

Certificate of Counsel 4

Memorandum in Support of Petition for Rehearing 5

I. The Maxim that He who comes Into Equity must come with Clean Hands is limited to the Particular Subject Matter to which the Inequity Attaches 5

The Facts 11

Argument 12

II. The Clutter Affidavit Recorded and Preserved the Truth. Is it Reprehensible to Preserve the Truth for the Court, Especially when the Affiant was Believed to be Unreliable? 14

III (a). The Practice of Adducing Affidavits 19

III (b). The Practice of Making Payments for Patent Rights Contingent Upon the Court's Decisions 22

III (c). There is Literally No Limit to the Number or Character of Devices that Can be Relied Upon by a Defendant in a Patent Suit. If Conduct Without Regard to the Subject-Matter to Which it Applies is to be the Basis, There is Literally No Such Rule in Patent Cases as the Rule that Equity Will Not Range at Large to Avenge Wrongs 24

IV. The Decree upon Rehearing in the Byers Case Stands Now as an Adjudication that there was No Unclean Hands and that the Downie Patent is Valid Regardless of such a Claim. How then Can there be Unclean Hands in Proceeding on that Decree in Other Cases? 26

Conclusion 29

Authorities Cited.

The Barbed Wire case 20

Barnes vs. Barnes, 282 Ill. 593 ..... 6, 8

Clemens vs. Clemens, 28 Wis. 637, 652; 9 Am. Rep. 520, 530 11

Harris vs. Harris, 208 Ala. 20, 93 So. 841 ..... 6, 11

Haatschappij vs. Kosloff, 45 Fed. (2) 94 (C. A. C. 2) 6, 7

Munn vs. The Americana Co., 17 R. A. 1916, D 116; 83 N. J. Eq. 309; 91 Atl. 87 ..... 6, 8, 9

In re Myerfield, 46 Fed. (2) 665; (D. C. N. D. Cal.) (Affirmed *Williams vs. Levy*, C. C. A. 9, 54 Fed. (2), 18) 6, 12, 13, 14

Toledo Scale Company vs. Computing Scale Company, 261 U. S. 399, 67 L. Ed. 719 26

Williams vs. Levy, 54 Fed. (2) 18 7

Wine vs. Enterprise, 25 Fed. (2) 236 24

Woodward vs. Woodward, 41 N. J. Eq. 224; 4 Atl. 424 9

21 *Corpus Juris*, §173, page 188, note 62 6

United States Circuit Court of Appeals

FOR THE SIXTH CIRCUIT.

GENERAL EXCAVATOR COMPANY, *Appellant*, vs. KEYSTONE DRILLER COMPANY, *Appellee*,	No. 6065.
KEYSTONE DRILLER COMPANY, *Cross-Appellant*, vs. GENERAL EXCAVATOR COMPANY, *Cross-Appellee*.	No. 6066.
THE OSGOOD COMPANY, *Appellant*, vs. KEYSTONE DRILLER COMPANY, *Appellee*.	No. 6067.
KEYSTONE DRILLER COMPANY, *Cross-Appellant*, vs. THE OSGOOD COMPANY, *Cross-Appellee*.	No. 6068.

PETITION FOR REHEARING.

To the United States Circuit Court of Appeals for the Sixth Circuit and the Honorable Judges thereof:

Comes now Keystone Driller Company, Appellee and Cross-appellant in the above-entitled causes, and

presents this, its Petition for a Rehearing of the above-entitled causes, and in support thereof respectfully shows:

I.

The Bills of Complaint ought not to be dismissed as to:

(a) The two patents in suit, Nos. 1,709,466 and 1,716,432 which were not in the *Byers* case;

(b) The two patents, Nos. 1,317,431 and 1,543,250 which were in the *Byers* case other than the Downie patent No. 1,511,114 to which last-mentioned patent alone the "unclean hands" doctrine was held to apply;

for the reasons that each patent in suit is a separate and distinct grant and the basis of a separate and distinct cause of action from each of the other patents in suit, that the several patents in suit were joined in said Bills of Complaint under the authority of General Equity Rule No. 26, and for the convenience of the Court and the parties, and the conduct of Downie held to be cause for denying relief as to Patent No. 1,511,114 is not connected, and not held to be connected in any way with any of the other four separate patents in suit or the causes of action thereon.

II.

It appears conclusively from the present record that the Clutter affidavit recorded and preserved the truth alone (except for one mistake which is against the Plaintiff), and from the opinion rendered on the rehearing of the *Byers* case by His Honor Judge Jones, the only judge who has seen and heard Clutter in any stage of any of

the litigation here involved, that Judge Jones has found Clutter wholly unworthy of credence as a witness. We respectfully submit that binding such a witness to the truth, as the affidavit did, in advance of litigation is not reprehensible conduct.

III.

In applying the "unclean hands" maxim to patent litigation, it is respectfully submitted that there ought to be weighed and considered customs peculiar to patent practice, long recognized and regularly observed therein and necessitated by conditions peculiar to that practice, —such conditions including the extreme and apparently unavoidable delays encountered in prosecuting litigation on patents, the decreasing weight of the presumption of validity of a patent arising from its grant by the Patent Office, and the limitless number and variety of devices that can be and frequently are relied upon by a defendant in a patent suit.

IV.

It ought not to be considered improper to rely upon the formal decree of a court of competent jurisdiction, wher the matters alleged to have tainted that decree have been presented to and considered by that Court in a rehearing had solely for the re-examination of such matters, and that Court has, upon such rehearing, reaffirmed its original decree.

WHEREFORE, upon the foregoing grounds, it is respectfully urged that this Petition for a Rehearing be granted, that times be set for the filing of briefs upon these questions and for oral argument, and that the decree

of the District Court be, upon further consideration of such briefs, argument and record, affirmed in cases Nos. 6065 and 6067, and reversed in cases Nos. 6066 and 6068.

Respectfully submitted,

W. H. Boyd,
F. O. Richey,
H. F. McNenny,
Of Counsel for Petitioner.

Boyd, Brooks & Wickham,
Richey & Watts,
Solicitors for Petitioner.

CERTIFICATE OF COUNSEL.

To the United States Circuit Court of Appeals for the Sixth Circuit, and the Honorable Judges thereof:

We and each of us hereby certify that we are counsel for Keystone Driller Company, Appellee and Cross Appellant in the above entitled causes, that we prepared the foregoing petition of said company for rehearing, that we are informed as to the proceedings in said causes, that said petition for rehearing is made in good faith, and not for the purpose of delay or hindrance of said proceedings, and that in our judgment said petition for rehearing is well founded.

W. H. Boyd,
F. O. Richey,
H. F. McNenny,
Of Counsel for Petitioner.

MEMORANDUM IN SUPPORT OF PETITION FOR REHEARING.

We respectfully urge that the foregoing petition for rehearing be granted for the reason that the points presented therein were not fully presented or considered by the Court on the hearing of these cases. We believe that these points are material and controlling and that a consideration of the same in connection with the authorities and argument will impel the Court to reach conclusions contrary to those expressed in the decision of December 6, 1932 in the above causes.

The specific reasons why we believe each of the foregoing grounds should be considered by the Court upon rehearing, the authorities in support thereof, and the reasons we regard these grounds as material and controlling are as follows:

I.

The Maxim that He who comes Into Equity must come with Clean Hands is limited to the Particular Subject Matter to which the Inequity Attaches.

This question has not been presented to the Court before this petition; it did not logically arise until after the decision. The defense of "unclean hands" does not appear in the original or amended pleadings. In their main brief before this Court Defendants Appellants said, (page 162) "The inequitable and fraudulent conduct of the Plaintiff here complained of grew out of and is inseparably connected with the rights which the Plaintiff is attempting to have the courts enforce with respect to *this* patent (Downie No. 1,511,114) in these suits." From this statement it is logical to conclude that our adversaries considered, as we do, that the alleged inequity,

and relief sought as a result thereof, was limited to the one patent. (Emphasis ours throughout unless otherwise indicated.)

Authorities:

In re Myerfield, 46 Fed. (2) 665; (D. C. N. D. Cal.) (Affirmed *Williams vs. Levy*, C. C. A. 9, 54 Fed. (2), 18);

Maatschappij vs. Kosloff, 45 Fed. (2) 94 (C. C. A. 2);

Barnes vs. Barnes, 282 Ill, 593;

21 *Corpus Juris*, §173, page 188, note 62;

Munn vs. The Americana Co., L. R. A. 1916, D-116; 83 N. J. Eq. 309; 91 Atl. 87;

Harris vs. Harris, 208 Ala. 20, 93 So. 841.

In re Myerfield (supra) one Levy sought to prevent sale by a referee in bankruptcy of property held by the bankrupt, Myerfield. Levy offered in evidence a deed conveying the property to him, and also introduced evidence establishing a resulting trust as to the same identical property in his favor. The referee found the deed to be a forgery, and denied all relief to Levy, in spite of the proof of a resulting trust, on the ground that Levy had come into court with unclean hands by reason of his offer of the forged deed, and was not entitled to invoke the equitable jurisdiction of the court either as to the deed or the resulting trust. The District Court reversed the order and found Levy was entitled to relief as to the resulting trust since the inequity applied only to the deed. The Court said, page 666:

> "Reprehensible though Levy's conduct may have been, I am constrained to hold that the referee erred in denying him all relief because he came into equity with unclean hands. The transaction by which the

resulting trust was created was not tainted with fraud, illegality, or unconscionable conduct on his part. The deed in question was not part of the proof of the existence of the trust; it was material only on an issue of legal as distinguished from equitable title. The applicable principle is well stated in *Barnes vs. Barnes*, 282 Ill. 593, 118 N. E. 1004, 1005, 4 A. L. R. 4, where a plaintiff had fabricated evidence to support various items in an account, but had established her right generally to an accounting in equity: '*He who comes into a court of equity must come with clean hands, and one who does iniquity cannot have equity; but that maxim is limited in its application to where the substance of the thing is inequitable and the iniquity must apply to the particular subject-matter.* It is not sufficient to bar relief that inequitable conduct should relate to the proof of some item or some fact, and where the origin of the claim is not inequitable, a fraudulent act in relation to it will not bar relief. *Goodwin vs. Hunt*, 3 Yerg (Tenn.) 124; 1 *Pomeroy's Eq. Jr.*, Section 399; *Chicago vs. Union Stockyards & Transit Co.*, 164 Ill. 224, 35 L. R. A. 281, 45 N. E. 430, 10 R. C. L. 140.' ''

This decision was affirmed by the Circuit Court of Appeals for the Ninth Circuit in *Williams vs. Levy*, 54 Fed. (2) 18.

The same rule was stated by the Second Circuit Court of Appeals in *Maatschappij etc. vs. Kosloff*, 45 Fed. (2) 94, as follows (page 96).

"Irrespective, however, of the validity of the trade-mark, we concur in the holding of the trial judge that, even if the claim, asserted by the registration, of a ten-year use of the mark prior to 1905, means such use in this country and if such claim were false, so that plaintiff would be unable to assert rights under the trade-mark, it would not there-

by be prevented from obtaining relief against unfair competition in the sale of its goods; *wrongdoing directly connected with the right sought to be vindicated may on the doctrine of 'unclean hands' deprive one of a remedy against piratical attacks on that property right; it does not outlaw the wrongdoer and leave him without protection in the vindication of other; though closely connected rights. Straus vs. Notaseme Co.*, 240 U. S. 179, 36 S. Ct. 288, 60 L. Ed. 590."

The case of *Barnes vs. Barnes*, 282 Ill. 593, cited and relied on by the Court in *In re Myerfield*, is a leading case on this point, and is cited in 21 *Corpus Juris*, Sec. 173, p. 188, n. 62, as authority for the statement:

> "Inequitable conduct in regard to the proof of some item or fact in a transaction does not preclude plaintiff from recovering the relief sought as to other items."

In the case of *Munn and Company vs. The Americana Co.*, 83 N. J. Eq. 309, 91 Atl. 87, the Vice-chancellor found facts establishing an agreement on the part of the complainant and the Americana Company to make money out of the public by publishing an encyclopedia by a corporation organized under the name of "Scientific American Compiling Department" and representing the encyclopedia as the work of the "Scientific American," a publication owned by the complainant, and thereby availing themselves of the reputation of that journal to attract subscribers for the encylopedia. Later the complainant sued to enjoin the use of the name "Scientific American Compiling Department" and also the use of the name "Scientific American" apart from the full corporate name. The Vice-chancellor awarded an injunction on both grounds. On appeal to the Court of Errors and Appeals, the case was heard by ten judges, nine of whom

concurred in reversing the Vice-chancellor as to the use of the corporate name "Scientific American Compiling Department" on the ground that complainant was not in court with clean hands, *while allowing the injunction to stand against the use of the name "Scientific American" in other ways.* The tenth judge dissented on the ground that the Vice-chancellor's decree should be affirmed in its entirety. Judge Swayse who delivered the opinion of the Court said (page 118):

> "We think that the complainant, when it tires of its bargain and seeks to enjoin the defendant from further profiting by the supposed connection, does not come into court with clean hands."
>
> *"We think therefore that the decree must be reversed; but it does not follow that the complainant is not entitled to some of the relief granted. The disqualification applies only to the particular matter or transaction with which the wrongful conduct had to do. Wodward vs. Woodward,* 41 N. J. Eq. 224, 4 Atl. 424. In this case the complainant's wrongful act had to do with the exploiting of the encyclopedia under the name of 'Scientific American Compiling Department.' The complainant is not shown to have assented to the use of the name 'Scientific American' for any other purpose. So far as the decree enjoins the Scientific American Compiling Department from using its corporate name it must be reversed; so far as it enjoins the use of the name 'Scientific American' in other ways, it must be affirmed."

The case of *Woodward vs. Woodward,* 41 N. J. Eq. 224; 4 Atl. 424, cited by Judge Swayse in *Munn vs. Americana Company, supra,* was a divorce action brought by the husband on the ground of adultery. Two adulterous acts were charged in the complaint; one committed by a man by the name of Carr on the 16th of March,

1885, and the other with the complainant's brother on the 6th of January, 1886. The Vice-chancellor stated that the proofs which established the illicit sexual intercourse with the complainant's brother demonstrated with almost equal clearness that the complainant had procured her to be debauched. The complainant thereupon abandoned the second adulterous act on the argument and the defendant urged that the complainant should be denied relief because he came into court with unclean hands. Van Fleet, Vice Chancellor, stated:

> "Were the case one in which it would be proper to apply the maxim 'That he that hath committed iniquity shall not have equity' or as it is sometimes rendered 'That he who comes into equity must come with clean hands' the court must thrust the petitioner from its doors promptly and sternly. But this maxim cannot be applied to the petitioner, if it be true that the defendant committed adultery on the 16th of March, 1885. If she was guilty of adultery on that day her crime was purely the result of her own depraved nature. There is nothing in the evidence which will justify even a suspicion that up to that time a desire had found a place in petitioner's heart that his wife might go astray. If, therefore, she did commit adultery on that day, her crime constituted a ground for divorce. Her criminal act gave her husband a right of action against her, of which nothing short of his voluntary surrender, or the commission by him of a matrimonial offence which entitled her to a divorce, could deprive him. The iniquity which deprives a suitor of a right to justice in a court of equity is not general iniquitous conduct, unconnected with the act of the defendant which the complaining party states as his ground or cause of action but must be evil practice or wrongful conduct in a particular matter or transaction in respect to which judicial protection or redress is sought. 1 *Pom. Eq. Jur.*, Sec. 399."

In the case of *Harris vs. Harris*, 93 So. 841, 208 Ala. 20, Judge Sayre quoted and relied upon the following statement of the law from *Clemens vs. Clemens*, 28 Wis. 637, 652; 9 Am. Rep. 520, 530:

> "Though engaged in an illegal transaction—hardly so much can be said against the conduct of complainant in this case—and unable to assert or maintain any rights or remedies founded on the unlawful thing done or intended to be done, *still the plaintiff forfeited no right or privilege beyond that, or with respect to any other matter or thing not within the purpose of the wrongful act, and not affected by the corrupt intent or caused or produced in consequence of it.* To the extent of his intended wrong he might be without a remedy, but in all other respects his rights and remedies are the same as if no such wrong had been done or intended. This is and should be the true measure and extent of all just punishment. *Though guilty of a wrong or transgression of the law in one particular*, a party does not become an outlaw, or forfeit his right to legal protection in all others, *nor lay himself open to the frauds and machinations of others to be practiced and perpetrated against him with impunity.*"

The Facts: (a) The patents in suit, No. 1,709,466, April 16, 1929 and No. 1,716,432, June 11, 1929 were not in the *Byers* case. Both were issued after the entry of the decree in the District Court in the *Byers* case. Both were issued after the applications for injunctions were submitted to Judge Hahn in the instant cases. Judge Hahn's opinion on the preliminary injunction proceedings was dated April 25, 1929, before the issue of patent No. 1,716,432, and his order on the preliminary injunctions was entered June 12, 1929, the day after the issue of patent No. 1,716,432.

The Plaintiff did not rely, or seek to rely, upon the adjudication in the *Byers* case in urging the validity and infringement, or anything else, regarding the patents Nos. 1,709,466 and 1,716,432. No request was made that interlocutory injunctions be issued upon these patents. These two patents were unadjudicated and were so treated, and were added to these causes by Supplemental Bills filed August 9, 1929, after the termination of the interlocutory injunction proceedings.

(b) The patents in suit Nos. 1,317,431 and 1,543,250 were in the *Byers* case and the adjudication of these patents in that case was relied upon in the instant cases throughout; but unlike the resulting trust in the *Myerfield* case and the unfair competition cause in the Second Circuit case, these two patents related to different items or causes. The Downie patent No. 1,511,114 to which the wrong-doing is held to attach covers sub-combinations separable from the other inventions of the other patents and is usable with or without them.

Argument: In the cases at bar each of the patents is included in these suits under the provisions of General Equity Rule 26 to the effect that Plaintiff may join in one bill all of the causes of action cognizable in equity that he may have against a defendant. Not only is each of the patents in suit a separate item, but it is, in fact, a separate cause of action joined under this rule. If separate causes had been brought under the separate patents, the wrong-doing would not have attached to these separate causes and the conclusion of this Court's opinion in this matter indicates that this Court so thinks. It is not reasonable to suppose that the Supreme Court in promulgating General Equity Rule 26 contemplated doing anything more than promoting the convenience of

the Court and the parties. It would be unreasonable to suppose that the Court intended that a tainted cause joined under this rule would taint other causes which, before the rule, might have been presented separately.

Infringement of each patent is a separate and distinct cause from the infringement of each other.

The four patents in suit other than the Downie patent No. 1,511,114 are usable with or without the inventions of said Downie patent. The Clutter patent No. 1,317,431 was held by this Court to cover a pioneer invention and to be generic. The machines disclosed in this patent have been made and sold in large numbers and used extensively without the improvements of the Downie patent No. 1,511,114. Patent No. 1,543,250 discloses a combination of elements for preventing the blind spot and is usable with any ditching machine combination, whether disclosed in patent No. 1,511,114 or not. Patent No. 1,709,466 is for a combination covering the means for connecting the stick to the bucket and is independent of the combinations whereby dumping is effected. It may be used whether dumping means are employed or not. Patent No. 1,716,432 broadly covers a combination employing a special side rake tooth and is independent of the combination of the Downie patent No. 1,511,114. On the other hand, in both the *Myerfield* and the Second Circuit case which we have cited, the causes or items were interlinked and inter-dependent.

The instant cases are, therefore, further without the rule than the cited cases. In the *Myerfield* case, the forged deed and the resulting trust related to the same subject-matter.

In the Second Circuit case, trade-mark infringement and unfair competition related to the same subject-mat-

ter. The rule of law in such cases applies with more force in the instant cases than in those cases. Here we have separate causes not even borne or in existence when the alleged inequity occurred.

In the *Myerfield* case there was but one cause and in the Second Circuit case the two causes were co-extensive and related to the same identical subject-matter. In the instant case the causes are separable and might be prosecuted as separate causes. There is, therefore, greater reason in the instant cases for applying the rule that the punishment for unclean hands will apply only to the item to which the alleged inequity attaches than in the cited cases.

II.

The Clutter Affidavit Recorded and Preserved the Truth. Is it Reprehensible to Preserve the Truth for the Court, Especially when the Affiant was believed to be Unreliable? We recognize and subscribe to the rule that it is reprehensible to bias the testimony of a prospective witness by proffered reward, whether such reward be contingent upon the outcome of litigation or not. That rule is not applicable to a situation where a party seeks only to have a possible witness of doubtful credibility record by affidavit the facts in a given case. The Court punishes not because of the conduct *per se*, but because of conduct that perverts the truth. In the instant case we have a dishonest man, Clutter, who has been bound to the truth. About Clutter's dishonesty Judge Jones said:

> "He testifies that Downie wrote it, but that he never read it and did not know its contents. This is effectively controverted by the notary before whom he signed and swore to it. If he swore to that affidavit his present testimony is false. His credibility,

in my opinion, has been so far impaired as to effectually destroy its weight."

Judge Jones is the only judge who has seen and heard Clutter. Plaintiff had the advantage of the courts in knowing that Clutter was dishonest long before he appeared in Court. Knowing that Clutter was dishonest and might, when the time came, testify dishonestly, as Judge Jones says he has, Plaintiff took the affidavit to bind him to the truth and the deal was made, not to make him a prejudiced witness, but to guard against his unreliability. The affidavit states the truth except where there is an error that is against the Plaintiff. The facts in the affidavit check (1) with the testimony of the other witnesses who testified about the Joplin use, (2) with the testimony of Clutter and (3) with the affidavit of Wallower.

The affidavit identifies the affiant as the Bernard R. Clutter who testified in these cases, and, as set out in the following parallel columns, recites facts which are proven by the testimony of defendants' witnesses, hostile to the Plaintiff:

Facts in Affidavit	*Proven by*
In December of 1919 or January 1920 Clutter assisted in the construction of two drop-bottom ditcher scoops.	Clutter, R. pp. 575 and 578 Wallower, R. p. 610 Cummings, R. p. 594 Hazen, R. pp. 598 and 601 Wallower affidavit, R. Vol. III, p. 183
Clutter operated the excavator on the excavation for the basement of the Joplin Supply Co. Building in Joplin, Mo. on which job the drop bottom ditcher was tried.	Clutter, R. p. 577 Phil Culbertson, R. pp. 586 and 587 Cummings, R. p. 593 W. L. Culbertson, R. p. 591 Cummings, R. p. 593 Hazen, R. p. 601 Wallower, R. p. 610 Wallower affidavit, R. Vol. III, p. 183
The device consisted of elements numbered (1) to (8) inclusive, of which elements (1) to (5) inclusive and (8), the boom, ditcher stick, sheave stands, hoisting cable, links, and hauling line	Clutter, R. p. 575 Phil Culbertson, R. p. 587. Cummings, R. p. 593 Hazen, R. p. 601 Wallower, R. pp. 610 and 611

were precisely the regular Keystone Ditcher parts as manufactured by The Keystone Driller Co. under patent No. 1,317,431.

The device included "(6) a scoop [rigidly] attached to the lower end of the stick having (7) a falling bottom pivoted to the sides of the scoop at a point near the open end of the ladder and near the lower edge of the sides."

Clutter, R. p. 576
Phil Culbertson, R. p. 588
Cummings, R. p. 594
Hazen, R. pp. 601 and 602
Wallower, R. Vol. II, p. 611
Wallower affidavit, R. Vol. III, p. 183
(The word "rigidly" is an error but is against the plaintiff. The mode of attachment testified to by Defendants' witnesses and shown in Defendants' Exhibit 26 could not be rigid; Downie, R. Vol. II, pp. 844 and 846)

"The new contrivance consisted in [rigidly] fastening a scoop body, [made after the pattern of the body of] the Keystone skimmer scoop, to the lower end of the stick, providing for discharge by the use of a pivoted bottom."

Clutter, R. Vol. I, p. 576
Phil Culbertson, R. Vol. I, p. 587
Cummings, R. Vol. I, pp. 593 and 594
Hazen, R. Vol. I, p. 601
Wallower, R. Vol. II, pp. 610 and 611
(The witnesses disagreed as to whether the scoop was "made after the pattern of the Keystone skimmer scoop" as stated in the affidavit, or was the identical skimmer scoop purchased with the machine. Clutter stated he did not remember. R. Vol. I, p. 576. Wallower stated in his affidavit, R. Vol. III, p. 183: "After securing from the Keystone Driller Company a print of the body plate of the Keystone skimmer scoop we had two scoops made for use in the manner described above."

"Two scoops were made in order that one might be always available as a stand-by to insure against the delay of the job which might have resulted from the necessity of repair or revision."

Hazen testified, R. Vol. I, p. 603: "Two scoops were rigged up for use as drop bottom scoops on this Joplin Supply Co. job because everybody that saw it from then on I think wanted to add a little additional, and as they got an idea we took the extra scoop not in use and built their idea into it." Wallower testified: R. Vol. II, p. 615: "Both excavating machines used were equipped with a skimmer scoop, which provided a spare scoop for emergency when using one machine." Wallower stated in his affidavit: "The principal reason for building two instead of one for trial was that we desired to have one scoop as a substitute for the job immediately before us, as a fallback in case of breakage." R. Vol. III, p. 183.

"Both scoops were in about the same stage of development when use as ditchers was given up. Both scoops were dismantled shortly after having been used on the Joplin Supply Co. job, and were converted into skimmer scoops."

Hasen testified, R. Vol. I, p. 602: "It's hard to answer what became of the machine after this Joplin Supply Company job was finished, particularly the scoops that had been used as drop bottom scoops, rigidly attached on the ditcher stick because there were two scoops changed. They were both of them changed back to skimmer scoops. One of them was made into a special sand scoop for skimmer work when the machine was later sold by Wallowers." Also Wallower affidavit, R. Vol. III, p. 184.

"Experimentation was abandoned;"

Clutter testified (R. Vol. I, p. 583): "Q. After you completed the excavation on the Joplin Supply Company's basement, you abandoned further experimentation on this device, did you not? A. Yes, sir, I did not go any further into the experiments at that time. • • • I did not do any more work on the drop bottom scoop after that time."

Hasen testified: "I have never seen this scoop after the job." (R. Vol. I, p. 608)

Wallower testified (R. Vol. II, p. 616): "Q. Then I take it that you did not do any further work on the scoop? A. That is true.

Q. And never saw this scoop in operation again? A. Do you mean this particular scoop or others of the same type?

Q. I mean either of the two scoops you used on the Joplin Supply Company job? A. As explained before on completion of this job the machines were stored and later sold and attachments also disposed of so that I never saw these particular scoops again."

Wallower stated in his affidavit, R. Vol. III, p. 184: "In March or April 1920 use as ditchers was abandoned and both scoops were converted into skimmers."

Extreme care was required to make the device as a whole operative, especially the latching arrangement.

Clutter testified (R. Vol. I, p. 583): "I figured on making a change on the latching arrangement." Hazen testified (R. Vol.

t, p. 603): "Everybody that saw it from then on I think wanted to add a little additional, and as they got an idea we took the extra scoop not in use and built their idea into it. I think all of these ideas related principally to the latch."

And, p. 604: "There was accidental unlatching due to the flexure of the scoop."

Wallower stated in his affidavit, R. Vol. III, p. 184: "The falling bottom was found to be of advantage in discharging sticky clay but not of sufficient advantage to warrant our continuing the use of the scoops in view of the care and repairing required for operation."

Where legal conclusions are stated in the affidavit such conclusions were affirmed by Judge Jones, the only Court passing on them thus far.*

There can be no wrong in securing the signature or affidavit of a prospective witness to a statement that contains the truth whether such prospective witness be honest or dishonest. As we understand it, the Court

---

* The affidavit states that the machine was "tried" at Joplin, that "both scoops were in about the same stage of development when use as ditchers was given up"; and that "experimentation was abandoned" because of the care required to make the device operative, and because Clutter did not conceive the advantage of the dumping bottom to be of sufficient practical worth to justify the expense of the re-design and experimentation which would have been necessary to make the device commercially useful.

Judge Jones stated:

"The changes there made (at Joplin) in the machine were not satisfactory and were not developed, in my opinion, to the point where they constituted anticipation of Downie. The drop bottom rigid scoop tried out at Joplin was not persisted in, but, on the contrary, it was abandoned * * *. I find that the Joplin machine was not satisfactory; that it was never perfected to the point of successfully accomplishing the result claimed for it; that it was an abandoned experiment."

wants the truth and acts to punish when a party militates against and not for the truth. Nor can it be said with any confidence that an affidavit which bound the dishonest Clutter to the truth made him a hostile or unwilling witness to anyone charged to infringe the patent except insofar as his testifying to the truth made him hostile or unwilling to such an infringer.

If the affidavit had any effect upon Clutter it was adverse to Plaintiff and not Defendants. The record shows and Judge Hahn held that Clutter was hostile to the Plaintiff in the instant cases. Clutter was also hostile to the Plaintiff in the *Byers* case. We did not offer the affidavit in evidence in the instant cases. The evidence as adduced by the witnesses other than Clutter was better for us than the affidavit.

As conclusive evidence of Downie's good faith, it nowhere appears in this record that Downie or the Keystone Company, of which he was the virtual head, did anything at any stage of these long proceedings to hinder or interfere with the production of Clutter as a witness, or to bias any testimony which he chose to give.

The whole matter it seems to us teeters about the truth, and the conduct of Downie is reprehensible or not, depending upon whether it promoted or interfered with the presenting of the truth to the Court.

III (a).

The Practice of Adducing Affidavits: Situations peculiar to the patent practice tempt a patentee in contemplation of litigation to bind a dishonest prospective witness to the truth in advance by procedures that may, unless carefully considered and analyzed, shock the conscience of a court of equity.

First, there is the long delay from which we do not seem to be able to free patent litigation* and from which delay it results that witnesses testify ten or fifteen years after the event, under circumstances where temptation to fabricate or torture the testimony against the patentee is impelling and too often effective as all patent courts have recognized. (*The Barbed Wire* case.) Against this practice the patentee has no means of defending himself or of avoiding seeing his patent and his investment in the litigation destroyed and lost with increasing costs against him except the chance that the Court will detect the fabrication or torturing of the evidence. This is not always a sound foundation upon which to rest such rights and such investments. Under the circumstances it should be difficult to condemn a patentee who places large investments in litigation for defending himself against the fabrication or torturing of evidence by adducing from the prospective witnesses, especially those known to him

* This litigation was started by the filing of the Bill in the *Byers* case in December, 1926. That suit came on in its regular turn to be heard in June, 1927 and the Plaintiff was then ready and eager to try it. Judge Westenhaver, however, postponed the hearing until September, 1927, to make way for and use its assignment to try a criminal case. The *Byers* case was tried in September, 1927, but while under consideration by Judge Westenhaver, he was taken sick and died. Politics, we are told, interfered with the immediate appointment of his successor and Judge Jones could not reach the case until January, 1929, when it was heard and decided by him.

Appeal was taken and heard by this Court in November, 1929, but decision was not handed down until December, 1930. Trial in the instant cases was then delayed until the spring of 1931. Decision was had in the summer of 1931. Appeal was taken and set specially by this Court for May, 1932, but on the vacating of the May, 1932 term of this Court, hearing was delayed until October, 1932. During these years Plaintiff pressed wherever expedient to do so or where pressure promised express. It is during such periods of delay that opportunity arises to fabricate or torture testimony about ancient defenses.

to be dishonest, affidavits which record the truth that the Court may have the truth and not fabricated or tortured evidence. Such investigations and the preserving of such evidence must of necessity take place before suit is instituted. The law provides a patentee with no means of preserving such evidence. The use of subpœna and like process is not available to him. He must then accede to the affiant's terms. We think it needs no charity on the part of the Court to conclude that the Plaintiff was recording and preserving the truth of the Joplin work when the Clutter and Wallower affidavits were adduced and not showing temerity about the effect of that defense. If the truth had been that that defense was fatal to the Downie patent, suit on it would never have been instituted. Certainly where there is such unavoidable delay in patent litigation as in the litigation over these patents, and where the courts recognize and state so emphatically not only the danger, but the practice of infringers employing that delay to fabricate and torture testimony, a patentee should be privileged to investigate such evidence timely to determine if he should invest in the litigation and record and preserve such evidence that it may not be tortured or fabricated against him. If the law furnishes the patentee no process by which this may be done, the law should not complain if he is driven to the affiant's bargain to record and preserve the truth for the Court. We agreed that it would be reprehensible even in these exigencies to record and preserve an untruth. Nor should it matter whose phrases are used if those phrases record and preserve the truth. The Courts are not to be misled by the phrases employed or by the words that record the truth, so long as it is the truth that is recorded. As we say, the whole matter hinges and gravitates about whether the affidavit records the truth or the untruth.

III (b).

The Practice of Making Payments for Patent Rights Contingent Upon the Court's Decisions: Payments contingent upon the outcome of litigation are the basis of virtually all present day patent contracts that would make the patentee and his associates biased and hostile if this holding of the court were the law. The installment plans of payments in which payments are contingent upon the outcome of the litigation as agreed to in Defendants' Exhibit No. 98 (R. Vol. IV, p. 1298) are peculiar to transactions regarding patent rights, and have become common of recent years in such transactions due to the uncertainty of the outcome of litigation on patents. When the presumption of the validity of a patent arising from its grant by the Patent Office was a reliable presumption purchasers of patent rights were willing to make deals regarding them not contingent upon their adjudication by the Courts, but under present prevailing practice, no sane man will invest any substantial sums or build substantially as against the future upon unadjudicated patents except on terms contingent upon the outcome of litigation on the patent. Consequently, few, if any, sales of patent rights are made, or licenses granted under the same (except the dollar assignments from employee to employer) which do not contain provisions that the royalties or what not constituting the consideration from the purchaser or licensee will be modified or in many cases cease altogether, dependent upon the outcome of litigation over the patent. Furthermore, generally the patentee agrees to prosecute such litigation. The inevitable effect of each and every such agreement is to make the patentee, frequently the inventor, and all those attached to him, biased and unwilling witnesses to an infringer, just as our ad-

versaries claim the agreement of Exhibit 98 may have made Clutter biased and hostile. It may be said that Downie was fairer to the Defendant in that he took the affidavit which fixed and preserved the truth, whereas in these other agreements of which we speak, the inventor and those embarked with him are left at large to torture or fabricate their evidence in their own interests. No matter how reprehensible or unfortunate this practice may seem, it is necessary where, as so often happens, one branch of the Government overturns grants issued by the other. Trade in patent rights must continue and under these conditions no sound plan exists except one contingent upon the outcome of the litigation. Nobody more than the members of this Court knows how often the inventor is called as a key witness to establish the date of his invention against prior art set up to challenge his rights. Relative dates of invention and art are the storm centers of many patent rights and the litigation over the same. Such dates are the potential storm centers of all patent rights and the litigation over the same.

Such was the deal of Exhibit 98 and such was the purpose thereof, whether the Court considers it a deal for Clutter's improvement in a scoop—that is, a sub-combination of the machine—as it plainly says, or for Clutter's improvements, if any, in the entire machine as our adversaries insist and the Court apparently concluded. It must be remembered that while the Joplin machine was abandoned, the scoop as a sub-combination went on, after the Joplin work was concluded.

Nor is it any answer to say that Downie made the payments he had agreed to make after he found that the scoop too had been abandoned. The answer to this lies perhaps in the fact that Downie was honest and did what

he had agreed to do, although Clutter could deliver him no patent right that each thought could be delivered when the deal was made. Judge Hahn is authority for the holding that Downie dealt honestly with Clutter. (R. Vol. II, p. 1095.)

Nor is it any answer to say that the "rights" of Clutter in the Joplin scoop were collateral to the invention of the Downie patent, whether we accept the proposition that such related to the scoop itself or insist that it related to the entire combination because the value of patent rights are tied or grouped together where the devices which they cover are inter-related and inter-dependent, and when so inter-related and inter-dependent the invalidating of one reduces, if it does not destroy, the value of the other. It was known when the deal was made that, unless the Downie patent were sustained, Clutter's rights would have been valueless. This inter-relation and inter-dependence was recognized by this Court in *Wine vs. Enterprise*, 25 Fed. (2) 236.

III (c)

There is Literally No Limit to the Number or Character of Devices that Can be Relied Upon by a Defendant in a Patent Suit. If Conduct Without Regard to the Subject-Matter to Which it Applies is to be the Basis, There is Literally No Such Rule in Patent Cases as the Rule that Equity Will Not Range at Large to Avenge Wrongs.

There is still another situation peculiar to patent litigation that must be dealt with in these premises growing out of the wide range of defenses that are presentable and are presented in patent litigation, widening in compass and increasing in number as a patent right increases

in value as a result of successful litigation. This case presents an example of this situation. The Defendants rely upon no less than 129 prior patents, publications, etc., covering a field within whose compass literally thousands of items of defense, just as pertinent as the least pertinent, at least, of those relied upon, may be found within the confines of the United States, its territories and possessions, or within the great volume of published patents, trade journals, etc., the world over. Moreover, any of these not relied upon in the answer are admitted to a patent suit even up until within a few days of the trial and as in this case often even after the trial. Manifestly, some line must be drawn between which of these constitute a basis for applying the remedy for unclean hands and which not, or else the rule that equity will not range afield to right wrongs is a mere hollow rule in patent cases. There are literally thousands of devices, patent rights regarding any one of which, bought by the Plaintiff on a basis contingent upon the outcome of this litigation, would constitute a basis for the punishment by a court of equity. As we say, some line must be drawn and logically it should be drawn between what is pertinent to the patent in suit and what is not. The Joplin device would fall without this line, since it is a thing so manifestly impertinent to the validity of the patent that Judge Jones who ruled directly thereon and Judge Hahn whose holdings might at its worst to the Plaintiff be said to be a "Scotch Verdict," has each held the Downie patent valid in face of the proof furnished by Clutter and the other witnesses. Manifestly also a thing held to be an abandoned experiment under the same circumstances should also fall without the line. We recognize the saying of this Court that it is concerned with conduct and not anticipation, but as long as there is the rule that

equity will not range at large to right wrongs *the concern of the Court about conduct is inseparable from the conduct about what*—and that "what" must of necessity be something pertinent to the suit. It cannot be about every one of the thousands of devices, no matter how remote, that a defendant in a patent suit is permitted under the present practice to rely upon as a defense.

Indeed there is nothing to prevent a defendant, as defendants have in this case, ranging abroad after patents have been sustained to find that a patentee may have done something regarding a device, no matter how remote from the case, but in the patentee's general line of business, which may constitute grounds for the defense of unclean hands, and including that defense in the case. If the Court looks only to the conduct and not to the pertinency or impertinency of the device, no patentee who has ever done anything tainted in his line of endeavor is safe with his patent in a court of equity.

IV.

The Decree upon Rehearing in the Byers Case Stands Now as an Adjudication that there was No Unclean Hands and that the Downie Patent is Valid Regardless of such a Claim. How then Can there be Unclean Hands in Proceeding on that Decree in Other Cases?

In the case of *Toledo Scale Company vs. Computing Scale Company*, 261 U. S. 399, 67 L. Ed. 719, the Computing Scale Company had obtained a decree against the Toledo Scale Company in the Seventh Circuit restraining the Toledo Company from infringement of a patent. The Toledo Company moved for a rehearing on the ground of newly discovered evidence, the evidence being an alleged public use by one Phinney. The Toledo

Company explained their failure to earlier find the evidence by showing that all of the devices which had been manufactured by Phinney had been purchased by the Plaintiff and destroyed or concealed and that the Plaintiff had known of the alleged use throughout the litigation and suppressed the knowledge. The Motion for Rehearing was denied. Subsequently the Toledo Company filed suit in the United States District Court in Ohio charging the Computing Company with a conspiracy to suppress evidence, etc., and asking for an injunction restraining the enforcement of the decree obtained by the Computing Scale Company in the Seventh Circuit. This injunction was granted. The Seventh Circuit Court of Appeals then ordered that the Toledo Company be enjoined from prosecuting the suit in Ohio and ordered the entry of summary judgment on the final decree against the sureties. This ruling was taken to the Supreme Court on certiorari. The late Chief Justice Taft who delivered the opinion of the Court stated (page 421):

> "Do the additional facts averred in the bill filed in the Ohio court change the situation? It is said they show extrinsic fraud committed by the Computing Scale Company, upon proof of which a court of equity, although in another jurisdiction, having jurisdiction of the parties, may enjoin the one guilty of the fraud from profiting by a decree so obtained. There has been much discussion as to whether extrinsic fraud is here alleged, and the case of *United States vs. Throckmorton*, 98 U. S. 61, 25 L. Ed. 93, is cited and numerous other authorities since that case."

(Page 423)

> "Another aspect of this record leads to the same conclusion. However nice the distinction between extrinsic and intrinsic fraud, *we have been*

cited to no case where it has been held that fraud is extrinsic when the court rendering the decree attacked had before it the same issue of fraud on the same facts, only a little more elaborated as to the motive of the party charged with committing it.

* * * * *

What the district court for northern Ohio was doing in hearing the injunction suit and issuing a temporary injunction was merely reviewing the discretion of the Circuit Court of Appeals of the Seventh Circuit in dealing with the same ultimate facts and reaching a different conclusion. This was beyond its province. *Embry v. Palmer*, 107 U. S. 3, 11, 27 L. Ed. 346, 349, 2 Sup. Ct. Rep. 25; *Telford vs. Brinkerhoff*, 163 Ill. 439, 443, 45 N. E. 156; *Marine Ins. Co. v. Hoggson*, 7 Cranch 332, 3 L. Ed. 362."

When the evidence of the Joplin work was presented to Judge Hahn, the question of suppression, etc., was not, or was thought not to be, squarely before the Court in the instant cases. Such seems to have been the view of most concerned because application was made to this Court to submit the matter in its entirety to Judge Jones in the *Byers* case. This Court upon that application ordered that the matter be submitted to Judge Jones with particular directions as to how it was to be handled, including the production of Clutter and Downie before Judge Jones in person. The parties went to much expense and trouble to carry out this order, and it was carried out to the letter. Clutter and Downie were produced before Judge Jones. He saw and heard them testify. He dismissed the charges of unclean hands and re-held the Downie patent valid and infringed, thus reaffirming his former holding with respect to that patent. No appeal was taken from this order though it was plainly an appealable order since it affected an injunc-

tion. The Byers Company made a lame attempt to get the matter before this Court, but between the argument and decision in the instant cases such attempt was dismissed. (The records of this Court in the *Byers* case mostly, if not entirely, made since the decrees were entered in the instant cases, are authority for these statements. See the order of Judges Dennison and Hicks, June 30, 1931, and the printed record filed in this Court by the Defendants in the *Byers* case in September, 1932.)

It seems to us an anomalous proceedings to declare that it was improper to proceed on the decree in the Byers case on the theory that it was improperly procured when that decree stands held properly procured by the Court having jurisdiction to hear and determine that question.

Conclusion: We think it fair to assume that those who advised Downie that he should proceed with his application* in the face of the Joplin work, that he should adduce the affidavit and take the other steps which he did take, were following well established and proper practices.

We think it fair to assume that Downie thought he was conforming to such advice and that as long as what he did recorded and preserved the truth it was proper.

If the Court thinks he exceeded the proper bounds, after all it was in the cause of recording and preserving the truth by the affidavit.

Defendants paid Clutter. He became, as Judge Hahn said, hostile to Plaintiff. In that mind he "horse-shedded" the other Joplin witnesses. Plaintiff paid Clutter to record and preserve the truth. He became hos-

* When Downie heard that a skimmer scoop had been added to a Keystone Clutter ditcher he—skilled in the art as he was—knew without further investigation two things, i. e., what was done at Joplin and that it was no good.

tile to Plaintiff. He did not suppress his evidence. He did not become biased against or hostile to defendants. The differences in payment are that defendants paid Clutter for his time and Plaintiff paid him for a quit claim on any patent rights on his scoop. The results were that Clutter served defendants and did all he could against Plaintiff. The different plans of payment had the result that he, Clutter, became hostile to the Plaintiff and not the defendant. The over all result was that the truth was preserved and recorded for the Court where certainly we would have had fabricated or tortured evidence.

Be these things as they may:

How can it be improper to proceed on a decree held to be properly procured? And we think in any event it is clear under the authorities that whatever "irregularity" there was should be limited to patent No. 1,511,114.

Respectfully submitted,

W. H. Boyd,
F. O. Richey,
H. F. McNenny,
*For Plaintiff.**

Richey & Watts,
Boyd, Brooks & Wickham,
Solicitors for Plaintiff.

---

* Mr. May, who formerly represented plaintiff in this matter of "unclean hands," died December 25, 1932, and that is the reason why his name is not appended hereto.

ORDER DENYING PETITION FOR REHEARING

(Filed February 9, 1933)

Before HICKS, HICKENLOOPER and SIMONS, Circuit Judges.

IT IS ORDERED, That the petition for rehearing in the above-entitled causes be denied upon the grounds set forth in the memorandum filed herewith.

MEMORANDUM ON ORDER DENYING PETITION FOR REHEARING

(Filed February 9, 1933)

Before HICKS, HICKENLOOPER and SIMONS, Circuit Judges.

Two principal contentions are advanced in support of the petition for rehearing. The first is that the original action is founded upon alleged infringement of five patents and that the bill should not be dismissed as to the four patents to which the "unclean hands" had no application. The cases cited are not precisely in point. *In re Meyerfield*, 46 F. (2d) 665, pertained to a claim in bankruptcy in which the claimant before the referee forged a deed and offered it in evidence to support his claim. He also claimed by reason of a resulting trust, and it was held that proof of the forgery did not preclude his recovery under the resulting trust. In this case the claimant did not undertake to initiate proceedings for his own relief in a court of equity. He was brought into such a court against his will and founded his claim upon two contentions as to one of which he fabricated evidence. The relief which was sought on the alleged resulting trust theory in no sense could be said to be

"founded on the unlawful thing done or intended to be done." *Woodward* v. *Woodward*, 41 N. J. Eq. 224, was a divorce proceeding and therefore not strictly an action in equity. *Munn & Co.* v. *Americana Co.*, 83 N. J. Eq. 309, was a case in which action was brought upon two grounds of relief, as to one of which plaintiff was held not to be entitled to a decree. *Mattschappij* v. *Kosloff*, 45 F. (2d) 94 (C. C. A. 2), uses language which is broad enough to justify plaintiff's position but which was obviously used without direct reference to the precise question we must here consider.

Prior to the adoption of the new Equity Rules, the question could never have arisen for a bill covering multiple causes of action would have been bad for duplicity. Such new Equity Rules are not intended to change the general nature and characteristics of a court of equity as a court of conscience in which the granting of relief is largely discretionary and the court is not bound by hard and fast rules. *Cf. Pope Mfg. Co.* v. *Gormully*, 144 U. S. 224, 236-7. It is true that a system of equity practice has grown up and that present-day courts are inclined to follow precedents rather strictly. On the other hand, we have not held any of the patents in suit invalid nor adjudicated any of the rights of the parties *inter sese*. The doctrine which we have applied is simply that if one, as actor, seeks to set the judicial machinery in a court of equity in motion upon grounds in respect to which his conduct is sullied he will find the doors of the court closed against him. The bar is said to be "*in limine*." The plaintiff is repelled as of the date of the filing of the bill and in respect of the maintenance of the action then instituted, because he does not then appeal to the court as one in whose behalf the largely discretionary powers of the court should be exercised. The fact that delay is thereby occasioned, or that the plaintiff has thereby suffered a loss of time and expense, is immaterial. The court has simply said: "We will hear you in this action although, not being a general avenger of the wrongs of humanity, it may be that you will not be in the future, and would not have been in the past, repelled on account of and but for your conduct."

The opinion already rendered sufficiently answers the contention that the reprehensible conduct was not really necessary and the Joplin use was not really an anticipation.

Memorandum on Order Denying Petition for Rehearing

The second material contention is that we have dismissed an application for rehearing in the Byers case, in which it was sought to bring up this evidence of unclean hands; that this is in effect an affirmance of the interlocutory decree in that case, and an adherence to the position taken in our prior affirmance of such interlocutory decree; that the position thus taken thereby becomes the law of the case, and that there is a hopeless inconsistency in holding that the conduct of the plaintiff does not bar recovery in the Byers case but does bar recovery in the present cases. There are several *non sequiturs* in the position thus stated. The decree previously reviewed by our court in the Byers case was interlocutory in its nature and the questions then presented may again be considered when and if the case is brought up upon final decree. This court has permitted the evidence of unclean hands to be presented in the court below and that court to consider the matter of the Joplin use in its bearing upon the defenses of anticipation and prior public use. We have held in the present cases that the plaintiff was barred not by its failure to disclose this prior use, if it was such, but by the advantage which it sought to take of a decree of validity obtained in the manner stated. With the introduction in evidence of all the pertinent facts both the earlier decree of the District Court and the affirmance by this court lose their efficacy as controlling factors (the law of the case) in subsequent decisions either in the District Court or here. But were this not so, it is obvious that applications for rehearing are addressed solely to the discretion of the court and a refusal to take such a matter up at the present time, in the exercise of a sound discretion, creates no inconsistency and will not bar the court from considering it later. For the reasons stated the petition for rehearing is denied.

UNITED STATES CIRCUIT COURT OF APPEALS FOR THE SIXTH CIRCUIT

I, J. W. MENZIES, Clerk of the United States Circuit Court of Appeals for the Sixth Circuit, do hereby certify that the foregoing is a true and correct copy of the record and proceedings in the cases of *The General Excavator Co.* v. *Keystone Driller Co.* No. 6065, *Keystone Driller Co.* v. *The General Excavator Co.* No. 6066, *The Osgood Company* v. *Keystone Driller Co.* No. 6067, *Keystone Driller Co.* v. *The Osgood Company* No. 6068., as the same remains upon the files and records of said United States' Circuit Court of Appeals for the Sixth Circuit, and of the whole thereof.

IN TESTIMONY WHEREOF, I have hereunto subscribed my name, and affixed the seal of said Court, at the City of Cincinnati, Ohio, this 15th day of March, A.D. 1933.

J. W. MENZIES,

Clerk of the United States Circuit Court of Appeals for the Sixth Circuit.

(SEAL)

SUPREME COURT OF THE UNITED STATES, OCTOBER TERM, 1933

No. 34

ORDER ALLOWING CERTIORARI—Filed May 29, 1933

The petition herein for a writ of certiorari to the United States Circuit Court of Appeals for the Sixth Circuit is granted. And it is further ordered that the duly certified copy of the transcript of the proceedings below which accompanied the petition shall be treated as though filed in response to such writ.

SUPREME COURT OF THE UNITED STATES, OCTOBER TERM, 1933

No. 35

ORDER ALLOWING CERTIORARI—Filed May 29, 1933

The petition herein for a writ of certiorari to the United States Circuit Court of Appeals for the Sixth Circuit is granted. And it is further ordered that the duly certified copy of the transcript of the proceedings below which accompanied the petition shall be treated as though filed in response to such writ.

SUPREME COURT OF THE UNITED STATES, OCTOBER TERM, 1933

No. 36

ORDER ALLOWING CERTIORARI—Filed May 29, 1933

The petition herein for a writ of certiorari to the United States Circuit Court of Appeals for the Sixth Circuit is granted. And it is further ordered that the duly certified copy of the transcript of the proceedings below which accompanied the petition shall be treated as though filed in response to such writ.

SUPREME COURT OF THE UNITED STATES, OCTOBER TERM, 1933

No. 37

ORDER ALLOWING CERTIORARI—Filed May 29, 1933

The petition herein for a writ of certiorari to the United States Circuit Court of Appeals for the Sixth Circuit is granted. And it is further ordered that the duly certified copy of the transcript of the proceedings below which accompanied the petition shall be treated as though filed in response to such writ.

SUPREME COURT OF THE UNITED STATES

STIPULATION AS TO RECORD—Filed July 7, 1933

It is hereby stipulated and agreed by and between counsel for the respective parties to the above entitled causes that the incomplete volumes III and IV of the record in the above causes as filed in the Circuit Court of Appeals, and as recovered and filed in this Honorable Court with the petition for certiorari, may be used at the hearing on the merits of the above causes.

Richey & Watts, Counsel for Petitioner. Corbett & Mahoney, Counsel for Respondents.

[File endorsement omitted.]

In the Supreme Court of the United States

OCTOBER TERM, 1932.

KEYSTONE DRILLER COMPANY,
Petitioner,
vs.
GENERAL EXCAVATOR COMPANY,
Respondent.
No.

KEYSTONE DRILLER COMPANY,
Petitioner,
vs.
GENERAL EXCAVATOR COMPANY,
Respondent.
No.

KEYSTONE DRILLER COMPANY,
Petitioner,
vs.
THE OSGOOD COMPANY,
Respondent.
No.

KEYSTONE DRILLER COMPANY,
Petitioner,
vs.
THE OSGOOD COMPANY,
Respondent.
No.

PETITION FOR WRITS OF CERTIORARI
To the United States Circuit Court of Appeals
For the Sixth Circuit,
and
BRIEF IN SUPPORT THEREOF.

FRANK O. RICHEY,
WILLIAM H. BOYD,
H. F. MCNENNY,
Counsel for Petitioner.

INDEX.

Petition for Writs of Certiorari..... 1

A. Summary Statement of Matter Involved..... 2

B. Reasons Relied Upon for Allowance of the Writs 3

I. 3

II. 3

III. 4

Brief in Support of Petition for Writs of Certiorari... 5

I. The Opinions of the Courts Below..... 5

II. Jurisdiction 6

III. Statement of the Case..... 6

IV. Argument 8

Summary of the Argument..... 8

A. 8

B. 13

C. 16

Conclusion 16

Authorities Cited.

General Electric Co. vs. Marvel-Rare Metals Co., 77 L. Ed. 239..... 15

Geneva Furniture Mfg. Company vs. Karpen et al., 238 U. S. 254, 59 L. Ed. 1295..... 14

Kinner v. Lake Shore & M. S. Ry. Co., 69 Ohio St. 339 14

Leeds and Catlin vs. Victor Talking Machine Company, 213 U. S. 301, 53 L. Ed. 805..... 14

Maatschappij vs. Kosloff, 45 Fed. (2) 94.....3, 8

Pope Mfg. Company vs. Gormully, 144 U. S. 224; 36 L. Ed. 414, 419..... 14

In Re Myerfield, 46 Fed. (2) 665.....3, 10, 11

Williams vs. Levy, 54 Fed. (2) 18.....3, 8, 10, 11

In the Supreme Court of the United States

OCTOBER TERM, 1932.

KEYSTONE DRILLER COMPANY,
Petitioner,
vs.
GENERAL EXCAVATOR COMPANY,
Respondent.
No. .....

KEYSTONE DRILLER COMPANY,
Petitioner,
vs.
GENERAL EXCAVATOR COMPANY,
Respondent.
No. .....

KEYSTONE DRILLER COMPANY,
Petitioner,
vs.
THE OSGOOD COMPANY,
Respondent.
No. .....

KEYSTONE DRILLER COMPANY,
Petitioner,
vs.
THE OSGOOD COMPANY,
Respondent.
No. .....

PETITION FOR WRITS OF CERTIORARI.

TO THE UNITED STATES CIRCUIT OF APPEALS
FOR THE SIXTH CIRCUIT.

To the Honorable Charles Evans Hughes, Chief Justice of the United States, and the Associate Justices of the Supreme Court of the United States:

Your Petitioner, Keystone Driller Company, prays that Writs of Certiorari issue to review the decrees of the Circuit Court of Appeals for the Sixth Circuit entered in

the above entitled causes on December 6, 1932 (R. Vol. V, pp. 117, 118) (Rehearing denied February 9, 1933, R. Vol. V, p. 157), reversing the decrees of the District Court for the Northern District of Ohio, Western Division, (R. Vol. II, pp. 1107 and 1137) and directing that the Bills of Complaint (R. Vol. I, pp. 3 and 96) be dismissed without prejudice.

A.

SUMMARY STATEMENT OF MATTER INVOLVED.

These cases arose from two equity suits for patent infringement filed by Petitioner against Respondents and involve the application of the equitable maxim of "unclean hands." The suit against the Respondent, The Osgood Company, is based on four separate patents, infringement of each of which is charged by the Bill of Complaint (R. Vol. I, p. 96) and Supplemental Bill of Complaint (R. Vol. I, p. 139); and the suit against the Respondent, General Excavator Company, is based on the same four patents and an additional patent, set up in the Bill of Complaint (R. Vol. I, p. 3) and Supplemental Bill of Complaint. (R. Vol. I, p. 44.) An injunction and an accounting for past infringement is sought as to each patent in each suit. (R. Vol. I; pp. 9, 48, 102 and 143.) The District Court held four of the patents valid and three of these infringed, and held one patent invalid.

The Court of Appeals found that plaintiff had come into Court with "unclean hands" in regard to one only of the patents involved in each suit (R. Vol. V, p. 119) and on that ground alone directed that the Bills of Complaint be dismissed as to all of the patents in suit. (R. Vol. V, p. 124.) The question presented by this petition is:

> "Where a plurality of equitable causes of action are joined in one suit, as permitted by General Equity Rule 26, and where one of such causes is sullied so as to justify dismissal from an equity court under the 'un-

clean hands' maxim, should all of the other and unsullied causes of action likewise be dismissed along with it?"

The Court of Appeals of the Sixth Circuit in the instant cases said (R. Vol. V, p. 158):

> "Prior to the adoption of the new equity rules, the question (which we now present to this Court) could never have arisen for a bill covering multiple causes of action would have been bad for duplicity."

Notwithstanding the Court below found that Petitioner had come into Court with "unclean hands" with respect to one of the patents only, and therefore that one only of the causes joined under Rule 26 was sullied, the Court held that the doors of the equity court were closed against Petitioner, not only as to the sullied cause of action, but as to all of the other causes of action presented therewith. (R. Vol. V, p. 158.)

Thereupon the Court of Appeals reversed the decrees of the District Court and ordered that the cases be remanded with instructions to dismiss the Bills of Complaint without prejudice. (R. Vol. V, p. 124.)

B.

REASONS RELIED UPON FOR ALLOWANCE OF THE WRITS.

I.

The ruling of the Court below is in conflict with the ruling of the Second Circuit Court of Appeals on the same question in *Maatschappij vs. Kosloff*, 45 Fed. (2) 94; and also conflicts with the ruling of the Ninth Circuit Court of Appeals in *Williams vs. Levy*, 54 Fed. (2) 18, affirming *In Re Myerfield*, 46 Fed. (2) 665.

II.

The ruling of the Court below defeats the plain purpose and intent of General Equity Rule 26 of this Court and

tends to multiply and increase the expense and burden of litigation.

III.

The Court below, in construing General Equity Rule 26 as requiring the dismissal of all causes of action joined thereunder in one suit upon a finding that the plaintiff's hands are unclean in regard to one only of the causes of action, has decided an important question of Federal law which has not been, but should be, decided by this Court; and has decided the same in a manner that is probably untenable and in conflict with the weight of authority.

Wherefore, your Petitioner respectfully prays that Writs of Certiorari be issued out of and under the seal of this Honorable Court, directed to the Circuit Court of Appeals for the Sixth Circuit, commanding that Court to certify and to send to this Court for its review and determination a full and complete transcript of the record and all proceedings in the cases numbered and entitled on its docket No. 6065, General Excavator Company vs. Keystone Driller Company; No. 6066, Keystone Driller Company vs. General Excavator Company; No. 6067, The Osgood Company vs. Keystone Driller Company; No. 6068, Keystone Driller Company vs. The Osgood Company, and that the said decrees of the Circuit Court of Appeals for the Sixth Circuit may be reversed by this Honorable Court and that your Petitioner may have such other and further relief in the premises as to this Honorable Court may seem meet and just.

Keystone Driller Company,

By Frank O. Richey,
William H. Boyd,
H. F. McNenny,
Counsel for Petitioner.

In the Supreme Court of the United States

OCTOBER TERM, 1932.

KEYSTONE DRILLER COMPANY,
Petitioner,
vs.
GENERAL EXCAVATOR COMPANY,
Respondent.
} No. ....

KEYSTONE DRILLER COMPANY,
Petitioner,
vs.
GENERAL EXCAVATOR COMPANY,
Respondent.
} No. ....

KEYSTONE DRILLER COMPANY,
Petitioner,
vs.
THE OSGOOD COMPANY,
Respondent.
} No. ....

KEYSTONE DRILLER COMPANY,
Petitioner,
vs.
THE OSGOOD COMPANY,
Respondent.
} No. ....

BRIEF IN SUPPORT OF PETITION FOR WRITS OF CERTIORARI.

I.

The Opinions of the Courts Below: The opinion in the Sixth Circuit Court of Appeals is reported at 62 Fed. (2) 48 and appears at page 119, Vol. V of the Record. The

opinion of the Sixth Circuit Court of Appeals denying rehearing appears in the Record, Vol. V, at page 157. The opinion of the District Court in the instant cases has not been reported and appears in the Record at pages 1067 to 1100, Vol. II.

II.

Jurisdiction: 1. The jurisdiction of this Honorable Court is invoked under Section 240a of the Judicial Code as amended by the Act of February 13, 1925; 28 U. S. Code, Section 347.

2. The date of the decrees to be reviewed is December 6, 1932. (R. Vol. V, pp. 117 and 118.) The petition for rehearing was filed Jan. 5, 1933 and was denied by the Court of Appeals February 9, 1933. (R. Vol. V, p. 157.)

3. These suits are equity suits arising under the patent laws of the United States. (R. Vol. I, pp. 3 and 96.) The decree of the Circuit Court of Appeals for the Sixth Circuit in each of the four appeals decided there requires that the Bills of Complaint in the two suits be dismissed without prejudice to the prosecution of suits at law; or actions in equity upon all the patents in suit except patent No. 1,511,114; or possibly to an action in equity upon all the patents. (R. Vol. V, p. 124.)

III.

Statement of the Case: Prior to the filing of the instant suits, three of the patents involved here were in suit against The Byers Machine Company in the United States District Court in Cleveland, Ohio, in which case these three patents were held valid by the District Court (R. Vol. I, pp. 10-13) and by the Sixth Circuit Court of Appeals. (44 Fed. (2) 283.)

After the decision of the District Court in the Byers case the instant suits were filed. Motions were made for

preliminary injunctions on each of the patents adjudicated in the Byers case, which were denied, but in lieu thereof, certain bonds were required.

Upon evidence presented by Respondents the District Court in the instant suits held in effect that Petitioner had suppressed or attempted to suppress during the Byers case the testimony of one witness regarding an alleged use urged as an anticipation of one patent in suit only—Downie patent, No. 1,511,114. The District Court in these cases, however, held that the "unclean hands" maxim did not apply to bar the relief sought in these suits. (R. Vol. II, pp. 1099 and 1100.)

The Court of Appeals of the Sixth Circuit, upon a hearing of appeals and cross-appeals in the instant cases held that Respondents had established the existence of a suppressive influence as affecting the Byers case and that by reason thereof Petitioner came into Court with unclean hands as to Downie patent, No. 1,511,114, and that these actions should be dismissed not only as to Downie patent, No. 1,511,114, but as to all the other patents and causes of action.

Neither the District Court nor the Court of Appeals in the instant cases found any wrongful conduct on the part of Petitioner relating to any of the patents in suit other than the Downie patent, No. 1,511,114. The finding of wrongful conduct by the District Court and the Court of Appeals in these cases related solely to an item of defense urged by Respondents against this one patent which was neither urged by the Respondents nor in any way material to any of the other patents in suit.

The Court of Appeals of the Sixth Circuit nevertheless reversed the District Court in each of the appeals and cross-appeals and directed that the Bills of Complaint be dismissed as to all of the patents without prejudice. (R. Vol. V, p. 124.)

IV.

ARGUMENT.

Summary of the Argument: A. The decision of the Court below is erroneous and is in conflict with the decisions of the Second Circuit Court of Appeals in *Maatschappij vs. Kosloff*, 45 Fed. (2) 94 and of the Ninth Circuit Court of Appeals in *Williams vs. Levy*, 54 Fed. (2) 18.

B. The construction by the Court below of General Equity Rule 26 is untenable and is a decision on an important question of Federal law which has not been, but should be, decided by this Court.

C. The decision of the Court below defeats the purpose of General Equity Rule 26 of this Court, and tends to multiply and increase the expense and burden of litigation.

A.

The ruling of the Court below that a finding that Petitioner has been guilty of conduct amounting to unclean hands in respect to one of the patents in suit but having no relation to any of the other patents in suit necessitates a dismissal of the suit as to all of these causes of action is directly contrary to the ruling by the Second Circuit Court of Appeals on precisely the same question of law.

In the case of *Maatschappij etc. vs. Kosloff*, 45 Fed. (2) 94, plaintiff sued to enjoin infringement of a trade-mark registered under the "Ten year clause" of the registration statute and also sued to enjoin the defendant from unfair competition. The defendant urged that the claim, asserted by the registration of the trade-mark, of a ten year use of the mark prior to 1905 was false, and that therefore the plaintiff was in Court with unclean hands. The Second Circuit Court of Appeals held (45 Fed. (2) 96):

"While, in view of the conclusion reached by us as to unfair competition, it may not be absolutely essential to determine the question of trade-mark, on the conflicting evidence before us, and in the light of that decision, we concur in the conclusions therein reached. Irrespective, however, of the validity of the trade-mark, we concur in the holding of the trial judge that, even if the claim, asserted by the registration, of a ten-year use of the mark prior to 1905, means such use in this country and if such claim were false, so that plaintiff would be unable to assert rights under the trade-mark, it would not thereby be prevented from obtaining relief against unfair competition in the sale of its goods; wrongdoing directly connected with the right sought to be vindicated may on the doctrine of 'unclean hands' deprive one of a remedy against piratical attacks on that property right; it does not outlaw the wrongdoer and leave him without protection in the vindication of other, though closely connected, rights. *Straus vs. Nataseme Co.*; 240 U. S. 179, 36 S. Ct. 288, 60 L. Ed. 590."

The Second Circuit Court of Appeals held that wrong doing directly connected with the rights sought to be vindicated, (the registered trade-mark) may deprive the plaintiff of a remedy in a court of equity on the doctrine of unclean hands, but that such wrong doing *did not deprive the plaintiff of its remedy in equity against unfair competition by the sale of the same articles charged to infringe the trade-mark*, and held that the plaintiff was entitled to an injunction restraining the unfair competition although the two causes of action were presented by the same Bill of Complaint.

In the instant case the Sixth Circuit Court of Appeals held (R. Vol. V, p. 158):

"The doctrine which we have applied is simply that if one, as actor, seeks to set the judicial machinery in a court of equity in motion upon grounds in respect

to which his conduct is sullied he will find the doors of the court closed against him"

and applied this bar not only to the one cause of action which the Court of Appeals held to be sullied, but to all other causes of action which were unsullied but which Petitioner sought to present at the same time.

The application of this rule stated by the Sixth Circuit Court of Appeals to the facts in the Second Circuit Case in the way in which the Court applied it in the instant case would necessarily have resulted in a holding that the plaintiff was not entitled to relief upon either the trade-mark, the unfair competition, or any other causes of action presented with these two if the plaintiff's conduct in respect to the trade-mark was wrong doing amounting to unclean hands.

Conversely the application of the rule stated by the Second Circuit Court of Appeals to the facts in the instant case would necessarily have resulted in a holding that even if Petitioner was barred by unclean hands on one cause of action, it was not barred on the other separate causes of action presented in the same suit.

The same conclusion was reached by the Courts in the Ninth Circuit in the cases of *In Re Myerfield,* 46 Fed. (2) 665, affirmed in *Williams vs. Levy,* 54 Fed. (2) 18, the ruling in those cases also being in conflict with the ruling of the Court below.

In the case of *In Re Myerfield* one Levy sought to prevent sale by a referee in bankruptcy of property held by the bankrupt, Myerfield. Levy offered in evidence a deed conveying the property to him, and also introduced evidence establishing a resulting trust as to the same identical property in his favor. The referee found the deed to be a forgery, and denied all relief to Levy, in spite of the proof of a resulting trust, on the ground that Levy had come into court with unclean hands by reason of his offer of

the forged deed, and was not entitled to invoke the equitable jurisdiction of the court either as to the deed or the resulting trust. The District Court reversed the order and found Levy was entitled to relief as to the resulting trust since the inequity applied only to the deed. The Court said, page 666:

> "Reprehensible though Levy's conduct may have been, I am constrained to hold that the referee erred in denying him all relief because he came into equity with unclean hands. The transaction by which the resulting trust was created was not tainted with fraud, illegality, or unconscionable conduct on his part. The deed in question was not part of the proof of the existence of the trust; it was material only on an issue of legal as distinguished from equitable title. The applicable principle is well stated in *Barnes vs. Barnes*, 282 Ill. 593, 118 N. E. 1004, 1005, 4 A. L. R. 4, where a plaintiff had fabricated evidence to support various items in an account, but had established her right generally to an accounting in equity; 'He who comes into a court of equity must come with clean hands, and one who does iniquity cannot have equity; but that maxim is limited in its application to where the substance of the thing is inequitable and the iniquity must apply to the particular subject-matter. It is not sufficient to bar relief that inequitable conduct should relate to the proof of some item or some fact, and where the origin of the claim is not inequitable, a fraudulent act in relation to it will not bar relief, *Goodwin vs. Hunt*, 3 Yerg (Tenn.) 124; 1 *Pomeroy's Eq. Jr.*, Section 399; *Chicago vs. Union Stockyards & Transit Co.*, 164 Ill. 224, 35 *L. R. A.* 281, 45 N. E. 430, 10 *R. C. L.* 140.' "

The decree in the District Court in that case was affirmed by the Ninth Circuit Court of Appeals in *Williams vs. Levy*, 54 Fed. (2) 18. That Court held in even more positive language that the finding of wrong doing in connection with one cause of action cannot affect another cause

of action presented therewith. The Court stated (page 19):

> "The referee seems to have been influenced by the fact, which he found upon conflicting evidence, that the deed which appellee produced, and which purported to convey the lot from the bankrupt to the appellee, was not genuine and that the bankrupt had not signed it. *But what possible difference could that fact make in the determination of the right of appellee to have the lot, which was by all the evidence admittedly* his, reserved to him?" (Italics ours throughout.)

The facts in the *Myerfield* case are on all fours with the facts in this case, and the ruling of the Court there, applied to the facts in this case would necessarily result in a holding that the Bills of Complaint should not be dismissed as to the causes of action unconnected with and unrelated to the alleged wrongful conduct, whatever might be the result as to the patent to which the conduct is said to relate.

Levy, the moving party, initiated proceedings in the equity court to protect his ownership of the property in question. Levy was not brought into court against his will, since he was free to relinquish his rights and allow the property to be sold. He was compelled to go into the equity court to protect his right in the same way that Petitioner was compelled to go into the equity court to seek an injunction against piratical attacks on Petitioner's patent rights and to prevent the destruction of the business Petitioner had built up upon those patent rights.

Under the recognized principles for applying the unclean hands maxim the Ninth Circuit Court of Appeals was clearly correct in granting the relief sought on the resulting trust theory, since this relief in no sense could be said to be "founded on the unlawful thing done or intended to be done." But the same is true of the relief sought by Petitioner on the causes of action arising from the infringe-

ment of the patents other than the Downie patent, No. 1,511,114. The preliminary injunction which was sought and denied on the other patents in suit in no sense could be said to be founded on the adjudication of the Downie patent, No. 1,511,114, but was founded only on the adjudication of those other patents in suit. The fourth and fifth patents in suit were added by supplemental bills after the application for preliminary injunction was denied.

Even if the reliance upon the previous adjudication in seeking a preliminary injunction on the Downie patent, No. 1,511,114, constituted unclean hands such as to bar the Petitioner from relief as to that patent in the instant suits, it is clear that Petitioner at no time in the instant suits has sought any relief on the other patents in suit based upon or in any way connected with the "unlawful thing done or intended to be done" whether that unlawful thing be considered to be the reliance upon the prior adjudication of the Downie patent, No. 1,511,114, as held by the Court below, or the previous conduct of plaintiff in regard to that patent, however the Court might construe that conduct in view of the hopelessly conflicting evidence.

B.

General Equity Rule 26* permits the joining in one suit of separate equitable causes of action, the expressed purpose being to "promote the convenient administration of justice." The rule is not intended to change any sub-

---

* The plaintiff may join in one bill as many causes of action, cognizable in equity, as he may have against the defendant. But when there are more than one plaintiff, the causes of action joined must be joint, and if there be more than one defendant the liability must be one asserted against all of the material defendants, or sufficient grounds must appear for uniting the causes of action in order to promote the convenient administration of justice. If it appears that any such causes of action cannot be conveniently disposed of together, the court may order separate trials.

stantive law or rule in equity, but merely to permit a combined trial of separate causes of action between the same parties which would not have been permissible prior to the rule.

Under the rule the universal practice has been to decide each cause of action on its own merits irrespective of the disposition of any other causes joined therewith, the only difference being that the causes are tried and considered together. In a suit on two patents, for example, the holding of one patent invalid does not affect the other which is in turn adjudicated upon its own merits. In *Leeds and Catlin vs. Victor Talking Machine Company*, 213 U. S. 301, 53 L. Ed. 805, this Court held that each invention claimed in a patent is a separate cause of action, and that the expiration of one claim by reason of the expiration of a foreign patent cannot affect the valjdity of another claim in the same patent to a different invention. Likewise where the court properly has jurisdiction of one cause of action, but not of another joined therewith, such other cause of action is dismissed and the case proceeds upon the one upon which the court has jurisdiction. *Geneva Furniture Mfg. Company vs. Karpen et al.*, 238 U. S. 254, 59 L. Ed. 1295.

The refusal of relief to a plaintiff on the ground of unclean hands is no different than the refusal of relief on the ground that the court has no jurisdiction. *Pope Mfg. Company vs. Gormully*, 144 U. S. 224; 36 L. Ed. 414, 419. Under the unclean hands maxim the equity courts do not punish or fine the plaintiff, but merely refuse to grant him relief in regard only to the particular matter concerning which his hand are unclean, (*Kinner v. Lake Shore & M. S. Ry. Co.*, 69 Ohio St. 339) and the case proceeds as to any other matters involved. *Pope Mfg. Company vs. Gormully & Jeffries Mfg. Company et al.*, 144 U. S. 238; 36 L. Ed. 420.

The Court below has held that causes of action joined under Equity Rule 26 and presented together in one bill are merged together to constitute a single "action" and that if the plaintiff's conduct is sullied in regard to any cause of action then presented, he will find the doors of the court closed against him "because he does not then appeal to the court as one in whose behalf the largely discretionary powers of the Court should be exercised." (R. Vol. V, p. 158.)

The Court said (R. Vol. V, p. 158):

> "Prior to the adoption of the new Equity Rules, the question could never have arisen for a bill covering multiple causes of action would have been bad for duplicity."

The Court below has thereby construed Equity Rule 26 as creating a merger of causes of action joined thereunder to such an extent that a defense, admittedly applicable to but one of the causes of action if they were presented separately, may justify dismissal of the Bill of Complaint as to all of the causes joined. This construction of Rule 26 constitutes a decision on an important question of Federal law which has not been, but should be decided by this Court. The rule does not state or imply that two or more causes of action joined in one suit shall become in effect one cause of action. And yet such a construction is implied by the decision of the Court below, since it is conceded that if the one patent found to be sullied had been omitted from the suit, or presented by a separate Bill, recovery on the others would not have been defeated. This Court has recently reviewed on Certiorari a conflict as to the construction of Equity Rule 30 in *General Electric Co. vs. Marvel Rare Metals Co.*, 77 L. Ed. 239, in which the petitioner contended for a similarly confining and nullifying construction of that Rule. It is submitted that the ruling in the instant cases should likewise be reviewed by this Court and the decisions reversed.

C.

Manifestly, such a construction of the rule tends to defeat the purpose of the rule. The inescapable conclusion from the Court's ruling is that plaintiff should have filed a separate Bill of Complaint on each of the patents in suit so as to avoid any possibility that a defense as to one of the patents only would defeat recovery on the other patents. This would multiply litigation, increase the expense to both the plaintiff and the defendant, and increase the burden of the litigation to the Courts and to the parties.

The propriety of this ruling presents a question of grave and immediate public importance. A plaintiff with two or more causes of action against one defendant which may be joined in one bill or presented separately will be constrained to accept the increased cost of instituting and carrying on two separate suits rather than joining the actions for the convenience of the Courts and all the parties if there is danger that a defense against one of the causes of action will be extended to and bar relief on the other solely because the two are presented by the same bill. The purpose of Rule 26, the promotion of the convenience of the Courts and parties by permitting joining of actions and reducing the number of suits will be nullified by such a precedent.

CONCLUSION.

It is, therefore, respectfully submitted that this case is one calling for the exercise by this Court of its supervisory powers, and that to such end Writs of Certiorari should be granted and this Court should review and reverse the decision of the Circuit Court of Appeals for the Sixth Circuit.

FRANK O. RICHEY,
WILLIAM H. BOYD,
H. F. MCNENNY,
Counsel for Petitioner.

FILE COPY

MAY 23 1932

In the Supreme Court of the United States

OCTOBER TERM, 1932.

KEYSTONE DRILLER COMPANY,
Petitioner,
vs.
GENERAL EXCAVATOR COMPANY,
Respondent.
No. [redacted] 34

KEYSTONE DRILLER COMPANY,
Petitioner,
vs.
GENERAL EXCAVATOR COMPANY,
Respondent.
No. [redacted] 35

KEYSTONE DRILLER COMPANY,
Petitioner,
vs.
THE OSGOOD COMPANY,
Respondent.
No. [redacted] 36

KEYSTONE DRILLER COMPANY,
Petitioner,
vs.
THE OSGOOD COMPANY,
Respondent.
No. [redacted] 37

PETITIONER'S REPLY BRIEF
In Support of Writs of Certiorari.

FRANK O. RICHEY,
WILLIAM H. BOYD,
H. F. McNENNY,
Counsel for Petitioner.

THE GATES LEGAL PUBLISHING CO., CLEVELAND, O.

In the Supreme Court of the United States

OCTOBER TERM, 1932.

KEYSTONE DRILLER COMPANY, *Petitioner,* vs. GENERAL EXCAVATOR COMPANY, *Respondent.*	No. 908.
KEYSTONE DRILLER COMPANY, *Petitioner,* vs. GENERAL EXCAVATOR COMPANY, *Respondent.*	No. 909.
KEYSTONE DRILLER COMPANY, *Petitioner,* vs. THE OSGOOD COMPANY, *Respondent.*	No. 910.
KEYSTONE DRILLER COMPANY, *Petitioner,* vs. THE OSGOOD COMPANY, *Respondent.*	No. 911.

PETITIONER'S REPLY BRIEF
In Support of Writs of Certiorari.

FRANK O. RICHEY,
WILLIAM H. BOYD,
H. F. MCNENNY,
Counsel for Petitioner.

INDEX.

Argument in Reply.

Summary of the Argument:

A. The ruling and facts found in *Carrington v. Pratt*, 18 How. 63, 15 L. Ed. 267, and cases following the doctrine laid down in that case is not applicable to the instant case 2

B. The purpose and importance of the conjoint rule doctrine has been eliminated since the adoption of Equity Rule 26 2

C. Reply to respondents' arguments on the supporting cases 5

D. The contentions on the merits do not substantiate respondents' claims 6

Conclusion 7

Cases Cited.

Carrington v. Pratt, 18 How. 63; 15 L. Ed. 267 2

Edison Phonograph vs. Victor Talking Machine Co., 120 Fed. 305 (C. C. Pa.) 4

I. T. S. vs. Essex, 272 U. S. 429, 433 7

Luten vs. Dover Construction Co., 189 Fed. 405 (C. C. N. J.) 4

Maatshappij vs. Kosloff, 45 Fed. (2) 94, ... 5

United States vs. Title Ins. & T. Co., 265 U. S. 472 5

Varner vs. New Hampshire Saving Bank, 240 U. S. 617 7

Williams vs. Levy, 54 Fed. (2) 18 5

In the Supreme Court of the United States

OCTOBER TERM, 1932.

KEYSTONE DRILLER COMPANY, *Petitioner*, vs. GENERAL EXCAVATOR COMPANY, *Respondent*.	No. 908.
KEYSTONE DRILLER COMPANY, *Petitioner*, vs. GENERAL EXCAVATOR COMPANY, *Respondent*.	No. 909.
KEYSTONE DRILLER COMPANY, *Petitioner*, vs. THE OSGOOD COMPANY, *Respondent*.	No. 910.
KEYSTONE DRILLER COMPANY, *Petitioner*, vs. THE OSGOOD COMPANY, *Respondent*.	No. 911.

PETITIONER'S REPLY BRIEF
In Support of Writs of Certiorari.

ARGUMENT IN REPLY.

SUMMARY OF THE ARGUMENT:

A. The ruling and facts found in *Carrington v. Pratt*, 18 How. 63; 15 L. Ed. 267, and cases following the

doctrine laid down in that case is not applicable to the instant case.

B. The purpose and importance of the conjoint rule doctrine has been eliminated since the adoption of Equity Rule 26.

C. Reply to respondents' arguments on the supporting cases.

D. The contentions on the merits do not substantiate respondents' claims.

A.

The respondents attempt to apply the ruling of this Court in *Carrington v. Pratt*, 18 How. 63; 15 L. Ed. 267, to the facts as exist in the case at bar. In that case a single bottomry bond contained items which were fictitious and contained elements of fraud. This of course would be analogous to a suit based on a single patent containing the same elements of fraud.

This Court, however, did not rule on whether relief would have been denied where there were five separate and distinct bottomry bonds on separate and different ships all belonging to the same fleet owner and where only one such bond had been tainted with fraud and where the causes of action had been joined in the same suit. The petition requests a ruling of the Court as to whether or not the petitioner whose rights have been invaded should be denied relief as to the patents which are not tainted with the wrongful conduct, except that they, as separate causes of action, were included in the same bill of complaint.

B.

While the Bills of Complaint allege conjoint use, they also allege a several use and in addition the Answer denies conjoint use. While some of the patents were conjointly

used in some of the infringing constructions, there were also cases that could not have been joined under the old rules so that the question of the application of Equity Rule 26 applies. The Bills of Complaint in the case at bar allege in paragraphs numbered XV a several use by the respondents, and in paragraphs numbered XVII a susceptibility of conjoint use of the inventions covered by the patents in suit. The following paragraph, No. XV, appears in the Bills of Complaint pertaining to the individual or several use by the respondents (R. Vol. I, pp. 7, 101):

> XV. Since the respective dates of issue of said patents Nos. 1,317,431, 1,511,114 and 1,543,250, and since the plaintiff acquired its title to and rights under said patents as hereinbefore recited, and within six years next preceding the filing of this bill of complaint, and without leave of or license from plaintiff, and in defiance of said patents and each of them and of plaintiff's rights thereunder, the said The General Excavator Company has made and/or caused to be made and has used and has sold, and is now making, using and selling within said Northern District of Ohio, Western Division, and elsewhere within the United States of America, numerous excavating machines embodying the inventions described and claimed in and patented by said patents Nos. 1,317,431, 1,511,114 and 1,543,250, and each of them, in infringement of said patents and each of them and particularly in infringement of claims 1, 3, 4 and 9 of said patent No. 1,317,431 of claims 6, 7, 8, 9, 10, 11, 12, 13 and 14 of said patent 1,511,114 and of claims 1, 2, 3, 4, 5, 6, 9 and 10 of said patent 1,543,250, all as by reference to the accompanying affidavit of Robert Rex Downie, together with the exhibits attached thereto will more fully appear.

The paragraphs relating to conjoint use are Nos. XVII as follows (R. Vol. I, pp. 8, 101):

XVII. The invention of the aforesaid patents are susceptible of conjoint embodiment and use in one and the same construction and have been so conjointly embodied and used in the machines made and sold by defendant as aforesaid.

Corresponding paragraphs are to be found in the supplemental Bills of Complaint (R. Vol. I, pp. 47, 48, 142, 143).

The Answers to the Bills of Complaint deny the conjoint use in paragraph 15 (R. Vol. I, p. 37) and paragraph XXIV (R. Vol. I, p. 132) and in the Answer to the supplemental Bills corresponding paragraphs are found (R. Vol. I, pp. 56, 155).

The respondents would have it appear that by isolating paragraph XVII of the Bills of Complaint relating to conjoint use, that the petitioner has abandoned his rights to recovery by a several use of any one of the patents under the allegations found in paragraph XV of the Bills of Complaint, and has also abandoned his rights to proceed under Equity Rule 26. In reality, the broad provisions contained in Equity Rule 26 have eliminated the necessity of pleading conjoint use. The purpose of such pleading being made under the old practice to overcome the defense that where suit is brought on several patents the bill is bad for multifariousness. *Luten vs. Dover Construction Co.*, 189 Fed. 405 (C. C. N. J.); *Edison Phonograph vs. Victor Talking Machine* Co., 120 Fed. 305 (C. C. Pa.)

Your petitioner has never waived or intended to waive any recovery to which he might be entitled because of respondents' wrongful invasion of his rights to the patent monopolies in a several or individual use.

In the instant case the allegation of paragraph XVII was intended to give the trial court a comprehensive scope

of the activities of the respondents in the invasion of the petitioner's rights.

6.

The decision of the Court of Appeals in the Second Circuit on this question in *Maatschappij vs. Kosloff*, 45 Fed. (2) 94, was not *obiter dicta*, as respondents repeatedly assert. It is fundamental that where a Court decides a question upon each of two grounds neither is *obiter dictum* but each is entitled to full weight as a decision and precedent. *United States vs. Title Ins. & T. Co.*, 265 U. S. 472.

The two causes of action in that case were even more closely related than the actions in the instant case. The same articles and precisely the same markings were sought to be enjoined as a trade mark infringement and as unfair competition.

The fact that the finding of unclean hands in *Williams vs. Levy*, 54 Fed. (2) 18, was based upon sharply conflicting evidence, as stated by the Ninth Circuit Court of Appeals obviously does not distinguish that case from the instant case. In this case the only evidence upon which respondents base their contention that petitioner "took elaborate steps to suppress evidence" and attempted to "perpetrate a fraud" is the testimony of a hostile former employee of petitioner. When this testimony and this "unclean hands" contention was sought to be introduced in the case against the Byers Companies, in which it is charged the petitioner obtained the adjudication by "reprehensible conduct," the trial court found that this witness had testified falsely (R. Vol. V, p. 2) and dismissed the "unclean hands" contention.

The conflict in this case is therefore more marked than in *Williams vs. Levy*.

D.

The respondents go into the merits in an effort to stampede the Court. Succinctly stated the most important are:

They say there was fraud. Judge Jones found otherwise after hearing and seeing the witness (R. Vol. V, pp. 2, 109, Exhibits "A" and "F").

They say there was a public use at Joplin. Judge Jones again decided otherwise (R. Vol. V, p. 2).

They say the Joplin experiment anticipated the Downie patent. Both Judge Jones and Judge Hahn after hearing and seeing the witnesses decided to the contrary.

They advance the idea that the Downie patent was the principal patent upon which these suits have been brought. This is not correct. The Clutter patent was the principal patent. (*Byers v. Keystone*, 44 Fed. (2d) 283, 284.)

They say the records upon which the unclean hands is based were forced out of our hands by their activities in uncovering the evidence. This is incorrect. We produced them upon request as soon as we learned Judge Hahn thought the evidence should be submitted. We offered to produce it without an order. A motion of the respondents to compel such production was thereupon denied (R. Vol. I, p. 205).

They claim that the patents are so related to each other that fraud as to one is fraud as to all. This is answered by the fact that the Court of Appeals said that they might be separated in the District Court (R. Vol. V, p. 124). The fact that the Court of Appeals said they might be separated in the District Court is also answer to the conjoint use contention.

It is also a very significant fact that upon the reopening of the case to test the charges made by respondents Judge Jones found that the accusing witness Clutter was untruthful and unreliable. To quote briefly of the opinion by Judge Jones (R. Vol. V, p. 2):

> "His credibility, in my opinion, has been so far impaired as to effectually destroy its weight. * * * The conduct of Clutter both before and after the Byers suit, is of such a character that little credibility can be accorded his evidence with respect to the prior use, unless it can be adequately corroborated and supported; * * *."

The Court of Appeals found that except for the Equity Rule 26 the cases could not have been joined originally. This Court has held that it will accept the finding of the lower court on the facts. *Varner v. New Hampshire Saving Bank*, 240 U. S. 617; *I. T. S. vs. Essex*, 272 U. S. 429, 433.

CONCLUSION.

It is, therefore, respectfully submitted that this Court exercise its supervisory powers, and that the Writs of Certiorari be granted and this Court should review and reverse the decision of the Circuit Court of Appeals for the Sixth Circuit.

Respectfully submitted,

FRANK O. RICHEY,
WILLIAM H. BOYD,
H. F. MCNENNY,
Counsel for Petitioner.

In the Supreme Court of the United States

OCTOBER TERM, 1933.

KEYSTONE DRILLER COMPANY, *Petitioner*, vs. GENERAL EXCAVATOR COMPANY, *Respondent*.	No. 34.
KEYSTONE DRILLER COMPANY, *Petitioner*, vs. GENERAL EXCAVATOR COMPANY, *Respondent*.	No. 35.
KEYSTONE DRILLER COMPANY, *Petitioner*, vs. THE OSGOOD COMPANY, *Respondent*.	No. 36.
KEYSTONE DRILLER COMPANY, *Petitioner*, vs. THE OSGOOD COMPANY, *Respondent*.	No. 37.

MAIN BRIEF FOR PETITIONER.

FRANK O. RICHEY,
WILLIAM H. BOYD,
H. F. MCNENNY,
Counsel for Petitioner.

INDEX.

Status 1

The opinions of the courts below 2

Statement of the Case 3

The Law:

I. Where causes are joined and one only is sullied the unsullied causes will not be dismissed. Proceeding may be had in equity in the unsullied causes as if none were sullied 6

II. Equity "is not an avenger of wrongs committed at large by those who resort to it for relief" 7

III. The wrongful conduct must be directly connected with and be material to the particular matter in litigation 7

IV. Fraud must be proved; it cannot be implied or presumed. The burden of proving fraud is on him who asserts it. Fraud cannot be built up one inference on another 7

Argument 8

Authorities Cited in Brief.

American Wood Paper vs. The Fiber Disintegrating Company, 23 Wall. 566 11

Barbed Wire Case, 143 U. S. 275 14

Barnes vs. Barnes, 282 Ill. 593 6

Bateman vs. Fargason, 4 Fed. 32 7

Bently vs. Tibbals, 223 Fed. 247 (C. C. A. 2) 7

Chisholm vs. Johnson, 106 Fed. 191 (C. C. Del.) 11

Chute vs. Wisconsin Chem. Co., 185 Fed. 115 7

Cole vs. Ralph, 252 U. S. 286, 64 L. ed. 567 13

The Corn Planter patent, 23 Wall. 181 11

Cropper vs. Davis, 243 Fed. 310 (C. C. A. 8) 7

Deering vs. Winona, 155 U. S. 284, 286 ..... 11, 14

Delk vs. St. Louis & San Francisco Railroad Co., 220 U. S. 580, 55 L. ed., 590 13

Edison vs. Sawyer-Man, 53 Fed. 592 (C. C. A. 2) 7

Geneva Furniture Mfg. Co. vs. Karpen, et al., 238 U. S. 254, 59 L. Ed. 1295 10

Giant Powder vs. California Powder, 8 Otto. 166 11

Harris vs. Harris, 208 Ala. 20, 93 So. 841 6

Hyndman v. Roots, 7 Otto. 224 11

I. T. S. vs. Essex, 272 U. S. 429, 433 11

Kansas City vs. De Vol, 81 Fed. 726, 731 (C. C. A. 8) 10, 11

Kinner vs. L. S. & M. S., 69 Ohio St. 339, 344, 69 N. E. 614 7

Leeds and Catlin vs. Victor Talking Machine Company, 213 U. S. 301, 53 L. Ed. 805 9

Liverpool & London & Globe vs. Clunie, 88 Fed. 160, 169 7

Looney vs. Metropolitan R. R., 200 U. S. 480, 488 7

Lowden vs. Janesville, 141 Fed. 975, (C. C. Wis.), aff. 148 Fed. 686, (C. C. A. 7) 11

Lutcher vs. Knight, 217 U. S. 257 13

Maatschappij vs. Kosloff, 45 Fed. (2) 94, 96, (C. C. A. 2) 6, 8

In re Meyerfield, 46 Fed. (2) 665 (D. C. N. D. Cal.); (Affirmed *Williams vs. Levy* (C. C. A. 9) 54 Fed. (2) 18) 6, 9

Miller vs. Berry (Fla.) 82 S. 764, 765 7

Munn vs. The Americana Co., 83 N. J. Eq., 309; 91 Atl. 87; L. R. A. 1916, D-116 6

Olmstead vs. U. S., 277 U. S. 488 13

Panama Railroad Company vs. Napier Shipping Co., 166 U. S. 280, 41 L. Ed. 1004 13

Raines vs. Ligon, 37 Fed. (2) 633 7

Sly vs. Central Iron, 201 Fed. 683, 686 (C. C. A. 7) ..10, 11

Tucker vs. Traylor, 48 Fed. (2) 783 (C. C. A. 10).... 7

United States vs. Elliott, 3 Fed. (2) 497 13

Varner vs. New Hampshire Savings Bank, 240 U. S. 617 11

21 *Corpus Juris*, Sec. 173, pp. 187-188..... 6, 7

Pomeroy's Equity Jurisprudence, Fourth Edition, Section 399..... 7

Appendix A:

The evidence relating to the doctrine of "unclean hands" is not only collateral to petitioner's rights in the instant cases, but it is not sufficient to constitute that degree of reprehensible conduct which amounts to unclean hands as to any cause of action involved in the instant cases 18

History of the Subject 18

Adducing Affidavits in Advance of the Trial 19

The Amount of the Compensation 23

Clutter's Testimony Opposed to That of Elmiry, Oliver, the Notary, Downie, and Others 24

Argument 27

Contention of the Parties 28

The Courts Below Made Inferences as to Unclean Hands Unwarranted by the Record 32

Judge Jones' conclusion that there was no fraud or suppression was not based upon any inferences at all 36

Conclusion 39

Cases Cited in Appendix A.

Adamson v. Gilliland, 242 U. S. 350, 61 L. Ed. 356 ... 18

Backer v. Hook, 295 Fed. 261, (C. C. A. 6) 19

The Barbed Wire Patent, 143 U. S. 275, 284, 289 ... 25, 36

Byers vs. Keystone, 44 Fed. (2) 283, 284 27

Gulf Smokeless v. Sutton, 35 Fed. (2) 433 (C. C. A. 4) 19

Pugh v. Snodgrass, 209 Fed. 325 (C. C. A. 6) 19

St. Paul Plow v. Starling, 140 U. S. 184, 35 L. Ed. 356 18

Vandenburgh v. Truscon Steel, 277 Fed. 345 (C. C. A. 6) 19

Appendix B:

Opinion of U. S. Circuit Court of Appeals, June 30, 1931 40

In the Supreme Court of the United States

OCTOBER TERM, 1933.

KEYSTONE DRILLER COMPANY, *Petitioner*, vs. GENERAL EXCAVATOR COMPANY, *Respondent*.	No. 34.
KEYSTONE DRILLER COMPANY, *Petitioner*, vs. GENERAL EXCAVATOR COMPANY, *Respondent*.	No. 35.
KEYSTONE DRILLER COMPANY, *Petitioner*, vs. THE OHIOOD COMPANY, *Respondent*.	No. 36.
KEYSTONE DRILLER COMPANY, *Petitioner*, vs. THE OHIOOD COMPANY, *Respondent*.	No. 37.

MAIN BRIEF FOR PETITIONER.

Status: These causes are before this Court as a result of a petition for certiorari to the Sixth Circuit Court of Appeals granted by this Court; 77 L. Ed. 1013 (Advance Sheets). The petitioner, Keystone Driller Company, was the plaintiff in the trial Court, the appellee and the cross-

appellant in the Court of Appeals. Each The Osgood Company and General Excavator Company were appellants and cross-appellees in the Court of Appeals. The two suits were tried together in the lower Court and presented together in the Court of Appeals.

These suits are patent infringement suits, but the question here involved relates to alleged "unclean hands"[1] and its materiality to causes akin to that in which such "unclean hands" is alleged to have been practiced.

The case is before this Court on certiorari to the Sixth Circuit Court of Appeals. The grounds of the Court's jurisdiction and other formal and procedural matters are set forth in the petition and the briefs of the petitioner applying for the writ of certiorari.

The specific question presented by the petition for certiorari as stated at page 2 thereof is:

> "Where a plurality of equitable causes of action are joined in one suit, as permitted by General Equity Rule 26, and where one of such causes is sullied so as to justify dismissal from an equity court under the 'unclean hands' maxim, should all of the other and unsullied causes of action likewise be dismissed along with it?"

The Opinions of the Courts Below: In the first, or Byers, case, the opinion of the Court of Appeals in the Sixth Circuit on the patents appears at 44 Fed. (2) 283, and, of Judge Jones, the trial Court, at R. Vol. I, pp. 14-16, ... Fed. Sup. ...[2] The opinion of Judge Jones on the question of "unclean hands" matters is reported at .... Fed.

---

[1] The nature of the acts constituting the alleged "unclean hands," though of collateral interest here, are set forth in detail in Appendix A that this Court may review them if it seems advisable to the Court to do so.

[2] We are advised that this opinion will be reported in the Federal Supplement early in the fall of 1933.

Sup. ....,[3] and appears at pages 2 to 5 of Vol. V of the record. The dismissal by the Sixth Circuit Court of Appeals of the appeal from Judge Jones' opinion on the "unclean hands" question appears at 63 Fed. (2) 996. The opinion of Judge Hahn, the trial Judge in the instant cases, has not been reported. It appears at pages 1067 to 1100 of Vol. II of the record. The opinion of the Sixth Circuit Court of Appeals in the instant cases appears at 62 Fed. (2) 48 and at page 119, Vol. V of the record, and the opinion of the same Court on rehearing appears at 64 Fed. (2) 39 and at page 157, Vol. V of the record.

Statement of the Case: All together six patents have been involved in this litigation which we will designate respectively the Clutter, the Wagner, the first Downie (1,511,114) (the alleged spilled one), the second Downie, the third Downie and the fourth Downie patents. All relate to ditching machinery and, except for the third Downie, all have been held valid by every Court ruling on any of them.

Prior to the filing of the instant suits, three of the patents (the Clutter, the Wagner and Downie, No. 1,511,114) involved here were in the Byers suit with the second Downie patent, in which case these four patents were held valid by the District Court in Cleveland (R. Vol. I, pp. 10-13), and by the Sixth Circuit Court of Appeals (44 Fed. (2) 283).

After the decision of the District Court in the Byers case the instant suits were filed on the Clutter, the first Downie (1,511,114) patent and the second Downie patent. Motions were made for preliminary injunctions on each of the patents adjudicated in the Byers case, which were denied, but in lieu thereof, certain bonds were required and posted. Later Supplemental Bills were filed including th

[3] This opinion, we are advised, will be reported in the Federal Supplement early in the fall of 1933.

fourth and fifth Downie patents which issued after the filing of the original Bill and after the preliminary injunction proceedings were submitted.

Upon evidence presented by our adversaries the District Court in the instant suits held in effect that Petitioner had, by taking an affidavit of one Clutter prior to the institution of the Byers suit[4] (Vol. II, p. 1091), practiced a fraud in the Byers, or original, case relative to the evidence of said Clutter regarding an alleged use urged as an anticipation of some of the claims of the first Downie patent (1,511,114) only. The District Court in these cases, however, held that there was no suppression or attempted suppression of evidence, no fraud, and no "unclean hands"[5] in the instant suits and that there was therefore no bar to the relief sought in these suits. (R. Vol. II, pp. 1099 and 1100). Decree was therefore for plaintiff on three of the five patents in suit including Downie patent 1,511,114. One patent was held invalid and another not infringed.

Thereupon counsel for the Byers Company applied for leave to reopen the Byers case to take the evidence regarding suppression and for a rehearing thereon, which application was presented to the Court of Appeals for the Sixth Circuit which, upon agreement of counsel, referred the case to the District Court (His Honor Judge Jones) at Cleveland to see and hear the witnesses and decide if there had

[4] "And even if the situation were in fact as Downie testified he believed it to be, the taking of the affidavit as he did would have been a reprehensible act, a fraud upon the courts who might subsequently consider the matter, a fraud upon subsequent claimed defendant infringers and upon the public who had a right to the benefit of the patent if it had in fact been abandoned to the public."

[5] "In these cases defendants' counsel had the testimony of Clutter when he was hostile to the plaintiff. They had all of the exhibits which have been commented upon herein and which tell the entire story with more accuracy than any witness who could testify with reference to them. There was in no sense a suppression of any evidence in these cases."

been conduct amounting to fraud or "unclean hands" in the Byers case. (See Appendix B to this Brief.)

Reopening and rehearing were had. The parties appeared with Mr. Downie, the accused, the accusing witness Clutter, and other witnesses before Judge Jones who saw and heard the witnesses, and where the matter of unclean hands was otherwise thoroughly gone into and thereupon Judge Jones found against defendants' claim of suppression and reaffirmed the validity of the first Downie patent (Vol. V, pp. 2 to 5), holding that there was no "unclean hands" and no fraud in the original (or Byers) case. (Decree at Vol. V, pp. 109 and 110.)

An attempt to appeal from such order of Judge Jones was dismissed by the Court of Appeals of the Sixth Circuit. (63 Fed. (2) 996.)

Nevertheless, the Court of Appeals of the Sixth Circuit, upon a hearing of appeals and cross-appeals in the instant cases, thought it

> "*quite obvious* that the credit which had been agreed upon was given to Clutter upon the *implied* condition that he should keep secret the details and circumstances of that prior use" (Vol. V, p. 120)
>
> (Emphasis ours throughout unless otherwise indicated.)

as affecting the Byers case and that by reason thereof Petitioner came into Court with unclean hands as to Downie patent, No. 1,511,114 only, and that these actions should be dismissed not only as to Downie patent, No. 1,511,114, but as to all the other patents and causes of action.

Neither the District Court nor the Court of Appeals in the instant cases thought there was any wrongful conduct on the part of Petitioner relating to any of the patents in suit other than the Downie patent, No. 1,511,114. The finding of wrongful conduct by the District Court and the

Court of Appeals in these cases related solely to an item of defense urged by Respondents against this one patent which was neither urged by the Respondents nor in any way material to any of the other patents in suit.

The Court of Appeals of the Sixth Circuit nevertheless reversed the District Court in each of the appeals and cross appeals and directed that the Bills of Complaint be dismissed as to all of the patents without prejudice. (R. Vol. V, p. 1214)

The above statement has been limited largely to matters upon which the specific questions presented in the petition are based. The general facts are found in Appendix A to this brief.

THE LAW.

I.

Where causes are joined and one only is nullified the unnullified causes will not be dismissed. Proceeding may be had in equity in the unnullified causes as if none were nullified.

In re Mercerfield, 46 Fed. (2) 665 (D. C. N. D. Cal.); (Affirmed *Williams vs. Levy* (C. C. A. 9) 54 Fed. (2) 18);

Maatschappij vs. Kosloff, 45 Fed. (2) 94 (C. C. A. 2);

Barnes vs. Barnes, 282 Ill. 593;

Munn vs. The Americana Co., 83 N. J. Eq., 309; 91 Atl. 87; L. R. A. 1916, D 116;

Harris vs. Harris, 208 Ala. 20, 93 So. 841;

21 *Corpus Juris*, Sec. 173, p. 188.

II.

Equity "is not an avenger of wrongs committed at large by those who resort to it for relief."

Kinner vs. L. N. & M. N., 69 Ohio St. 330, 344, 69 N. E. 614;

Miller vs. Berry (Fla.) 82 S. 764, 765;

Bateman vs. Ferguson, 4 Fed. 32;

Liverpool & London & Globe vs. Clapp, 88 Fed. 160, 169;

Chute vs. Wisconsin Chem. Co., 185 Fed. 115;

Edison vs. Squeger Man, 53 Fed. 592 (C. C. A. 2);

21 *Corpus Juris*, Sec. 173, pp. 187 188.

III.

The wrongful conduct must be directly connected with and be material to the particular matter in litigation.

Beatty vs. Tibbals, 223 Fed. 247 (C. C. A. 2);

Cropper vs. Davis, 243 Fed. 310 (C. C. A. 8);

Pomeroy's Equity Jurisprudence, Fourth Edition, Sec. 399.

IV.

Fraud must be proved; it cannot be implied or presumed. The burden of proving fraud is on him who asserts it. Fraud cannot be built up one inference on another.

Looney vs. Metropolitan R. R., 200 U. S. 480, 488;

Tucker vs. Traylor, 48 Fed. (2) 783 (C. C. A. 10);

Raines vs. Ligon, 37 Fed. (2) 633;

Chute vs. Wisconsin, 185 Fed. 115.

ARGUMENT.

(1) It is manifest that the purpose of General Equity Rule 26* was to accomplish economy in litigation by inducing litigants to submit all their causes in one suit and such has been the result of the rule. To reject good causes because it develops after expensive and lengthy litigation that one of the causes is bad would largely defeat the purpose of the rule, for litigants would become wary of joining a plurality of causes in the same suit when, if it developed that one of the causes was bad, all the work and much of the expense of the first suit must be incurred again. The question in various forms has been presented to the Courts since the rule was promulgated and in every instance except the instant case only the bad cause has been dismissed while the suit has proceeded with the other and good causes.

In *Maatschappij vs. Kosloff*, 45 Fed. (2) 94, 96, (discussed in detail in our briefs on the petition) the Second Circuit Court of Appeals held that the plaintiff was entitled to a decree in an unfair competition cause irrespective of whether or not a trade mark cause which was interlocked with it was bad because of unclean hands relating to perjury as held by the District Court. The Court stated what we understand to be the correct rule in the following language:

> "While, in view of the conclusion reached by us as to unfair competition, it may not be absolutely es-

* The plaintiff may join in one bill as many causes of action, cognizable in equity, as he may have against the defendant. But when there are more than one plaintiff, the causes of action joined must be joint, and if there be more than one defendant the liability must be one asserted against all of the material defendants, or sufficient grounds must appear for uniting the causes of action in order to promote the convenient administration of justice. If it appears that any such causes of action cannot be conveniently disposed of together, the court may order separate trials.

sential to determine the question of trade-mark, on the conflicting evidence before us, and in the light of that decision, we concur in the conclusions therein reached. Irrespective, however, of the validity of the trade-mark, we concur in the holding of the trial judge that, even if the claim, asserted by the registration, of a ten year use of the mark prior to 1905, means such use in this country and if such claim were false, so that plaintiff would be unable to assert rights under the trade mark, it would not thereby be prevented from obtaining relief against unfair competition in the sale of its goods; wrongdoing directly connected with the right sought to be vindicated may on the doctrine of 'unclean hands' deprive one of a remedy against piratical attacks on that property right; it does not outlaw the wrongdoer and leave him without protection in the vindication of other, though closely connected, rights. *Straus vs. Notaseme Co.*, 240 U. S. 179, 36 S. Ct. 288, 60 L. Ed. 590."

In the case of *In re Meyerfield*, 46 Fed. (2) 665, affirmed 54 Fed. (2) 18 (C. C. A. 9) (discussed in detail in our brief on the petition) the Court proceeded with a cause relating to a resulting trust though a cause relating to a deed interlocked therewith was found bad for unclean hands because of forgery.

Under the rule the universal practice has been to decide each cause of action on its own merits irrespective of the disposition of any other causes joined therewith, the only difference being that the causes are tried and considered together. In a suit on two patents, for example, the holding of one patent invalid does not affect the other which is in turn adjudicated upon its own merits. In *Leeds and Catlin vs. Victor Talking Machine Company*, 213 U. S. 301, 53 L. Ed. 805, this Court held that each invention claimed in a patent is a separate cause of action, and that the expiration of one claim by reason of the expiration of a foreign patent cannot affect the validity of another claim

in the same patent to a different invention. Likewise where the Court properly has jurisdiction of one cause of action, but not of another joined therewith, such other cause of action is dismissed and the case proceeds upon the one upon which the Court has jurisdiction. *General Fireproofing Mfg. Co. vs. Karpen, et al.*, 238 U. S. 254, 59 L. Ed. 1295.

In *Kansas City vs. DeVol*, (81 Fed. 726), the Court of Appeals in the Eighth Circuit refused to dismiss as to all of the patents in suit where plaintiff failed to establish its title or to show infringement with respect to one of the patents in suit.

In *Sly vs. Central Iron* (201 Fed. 683) the Court of Appeals in the Seventh Circuit refused to dismiss a bill as to all of the patents when it was found that equity did not have jurisdiction in the case of one of them.

The decision of the Court of Appeals in the instant case is therefore in direct conflict with the decision of the Second Circuit Court of Appeals in *Maatschappij vs. Kosloff* and the District Court of California in the *Meyerfield* case, and in general conflict with the practice in *Leeds vs. Victor, General vs. Karpen* and would, if it were the law, do much to defeat the purpose of Rule 26.

Assuming that separate suits had been instituted on each of the patents in suit and the Court had found unclean hands in one only of the several suits would all the suits have been dismissed? Certainly not! A Court is not an avenger of wrongs committed at large. Did this Court intend to change that precept by promulgating Rule 26? We think not.

It is no answer to say that the bill alleged joint use and patents capable of joint use might have been joined before the promulgation of Rule 26 for the following reasons:

(A) Rule 26 supplanted and superseded all other procedure for joining causes.

(B) The answer denied conjoint use while the Bill pleaded conjoint and several use. Under the old procedure joinder was not required even where there was conjoint use.

(C) The Court of Appeals said correctly (Vol. V, p. 158):

> "Prior to the adoption of the new equity rules, the question (which we now present to this Court) could never have arisen for a bill covering multiple causes of action would have been bad for duplicity."

This Court has held that it will accept a finding of the lower Court on such collateral facts. *Varner vs. New Hampshire Savings Bank*, 240 U. S. 617; *I. T. S. vs. Essex*, 272 U. S. 429, 433.

(D) Even under the conjoint use practice of joinder, a bill was not dismissed as to all patents where one failed. The practice was to dismiss only as to the one patent. (*Sly vs. Central Iron*, 201 Fed. 683, 686 (C. C. A. 7); *Kansas City vs. De Vol*, 81 Fed. 726, 731 (C. C. A. 8); *American Wood Paper vs. The Fiber Disintegrating Company*, 23 Wall. 566; *Giant Powder vs. California Powder*, 8 Otto. 166; *The Corn Planter patent*, 23 Wall. 181; *Hyndman v. Roots*, 7 Otto 224; *Deering vs. Winona*, 155 U. S. 284; *Lowden vs. Janesville*, 141 Fed. 975, (C. C. Wis.), aff. 148 Fed. 686, (C. C. A. 7); *Chisholm vs. Johnson*, 106 Fed. 191 (C. C. Del.).)

(E) In their brief on the petition defendants contended that the proofs regarding the various patents was "commingled" and could not be "unscrambled," but the evidence regarding patent No. 1,511,114 is presented separately from that of the other patents. (Vol. 1, pp. 235-240, 311-313, 623-644 and other places in the record.)

(2) A Court of Equity "is not an avenger of wrongs committed at large by those who appeal to it for relief" and will not range afield to avenge such wrongs. Such a Court will not avenge wrongs except those directly connected with the matter in litigation. These are well established and sound rules and are applicable in the premises. (See Section of this Brief entitled Law—II.)

(a) By implication alone[7] the Court of Appeals arrived at the conclusion that there was conduct amounting to "unclean hands" in relation to an alleged defense to patent 1,511,114 and to no other patent in suit. This defense is claimed to anticipate only some of the claims of that Downie patent (1,511,114) in suit.[8] The Joplin work is subsequent to the filing date of the Clutter patent in suit. Judge Jones held that the defense was immaterial to any claim in the Byers suit. (Vol. V, pp. 2-5.) Judge Hahn held that the defense was immaterial to any claim in the instant suits.

Truly equity would be ranging far afield to dismiss the causes on the other patents in suit when it has been held by both District Judges that the acts are immaterial not only to these other patents but to patent 1,511,114 and where the claim of the defendant is limited to some only of the claims of patent 1,511,114.

---

[7] (Vol. V, pp. 120 and 123):

"But it is quite obvious that the credit which had been agreed upon was given to Clutter upon the implied condition that he should keep secret the details and circumstances of that prior use—that so far as he was able to produce this result the evidence which caused the patentee uneasiness was to be suppressed."

* * * * *

"The only possible effect of such conduct was to suppress Clutter's testimony, or, if the facts came to the knowledge of the defendant, to make him an adverse or unwilling witness."

[8] In the Byers suit all 14 of the claims of this patent were in suit and sustained. In the instant case claims 6 to 14 are in suit. Defendants allege that only claims 6, 9, 10, 12 and 13 are anticipated out and out by the Joplin defense.

(b) In the instant case the "acts" are immaterial for the further reason that the evidence alleged to have been suppressed was before the Courts in the instant cases. As Judge Hahn said, no evidence was suppressed in the instant cases. (R. Vol. II, pp. 1099 and 1100.) It was, moreover, immaterial since he sustained patent 1,511,114 notwithstanding the evidence which by implication the Court of Appeals found to constitute "unclean hands" in the Byers case. There is no warrant for the dismissal of causes on patents joined, under Rule 26, to a cause on another patent which latter cause is said to be bad because of evidence, not suppressed but before the Court here, merely because the Court of Appeals by implication alone found that such evidence was suppressed in a companion (the Byers) case, especially when the trial Judge (Jones) found that it was not even suppressed there. (Vol. V, pp. 4 and 5.)[9]

(c) [10] But the evidence was not suppressed in the Byers case. The accusing witness Clutter so admitted on

[9] "No satisfactory showing of the Joplin use appearing, there was no suppression affecting the rights of the defendant. Upon that phase of the case, however, I find that Downie endeavored to secure for his own protection whatever rights Clutter may have had to the improvement, for the purpose of avoiding any trouble in sustaining his patent, together with the denial of prior use by Clutter. I find that Downie did not successfully accomplish this purpose; that such arrangement as was entered into with Clutter was breached prior to trial of this case, and that Clutter was under no suppressive influence or obligation at that time respecting his alleged invention or prior use. I find there was no suppression of evidence materially affecting the defendant's rights."

[10] We are at this point probably passing beyond the scope of the specific question presented in the petition for certiorari but we think still within the scope of the practice announced by this Court in *Delk vs. St. Louis & San Francisco Railroad Co.*, 220 U. S. 580, 55 L. ed., 590; *Panama Railroad Company vs. Napier Shipping Co.*, 166 U. S. 280, 41 L. Ed. 1004; *Cole v. Ralph*, 252 U. S. 286, 64 L. ed. 567; *Lutcher vs. Knight*, 217 U. S. 257; *Olmstead vs. U. S.*, 277 U. S. 488; *United States vs. Elliott*, 3 Fed. (2) 497.

cross examination (R. Vol. V, pp. 35 to 50), and the trial Judge (Jones) so found. (Vol. V, pp. 2, 4 and 5.) No evidence having been suppressed equity would truly be exceeding proper limits to dismiss suits on the other patents because it is alleged but disproved that evidence was suppressed regarding patent No. 1,511,114.

(d) All the Courts ruling on the question have found that the Joplin evidence did not anticipate or otherwise invalidate any of the claims of patent 1,511,114 and was therefore immaterial even to that patent. (Judge Jones went further and ruled that the work was merely an abandoned experiment (*Deering vs. Winona*, 155 U. S. 286) and had not been proved. (Vol. V, p. 4.)[11] (*Barbed Wire Case*, 143 U. S. 275.) The Court of Appeals stated that it was not disturbing this situation. (R. Vol. V, p. 158.)[12] Equity would indeed be ranging afield to dismiss the causes on the other patents because of alleged improper acts regarding a defense immaterial to patent 1,511,114 or any other cause in the suit for three separate and several reasons.

(e) The Court of Appeals did not find that the evidence was suppressed; it found that it was "quite obvious" that Mr. Downie's acts were with "the implied condition" that Clutter should keep secret (Vol. V, p. 120) that "it would seem that the parties considered the continued silence of Clutter as essential" (Vol. V, p. 121), and that "the only possible effect of such conduct was to suppress

[11] "I find that the Joplin machine was not satisfactory; that it was never perfected to the point of successfully accomplishing the result claimed for it; that it was an abandoned experiment. My conclusion is that it was not a prior use constituting an anticipation of the Downie patent."

[12] The Court of Appeals said:

> "On the other hand, we have not held any of the patents in suit invalid nor adjudicated any of the rights of the parties *inter sese*."

Clutter's testimony." All these are inferences of the Court in direct conflict with Clutter's testimony that he did not suppress the evidence (Vol. V, pp. 35-50) and with the finding of Judge Jones, who saw and heard Clutter and Downie testify (Vol. V, pp. 4 and 5), that Clutter was under no suppressive influence. (Vol. V, p. 5.) Certainly equity is going too far in dismissing the causes on the other patents because the Court of Appeals thus implies fraud or finds fraud regarding patent 1,511,114 only on inferences which are unwarranted. (Authorities cited in Section of Law—IV hereof.)

(f) Clutter is unworthy of belief. Judge Jones found that he had repudiated his own affidavit and that he had testified falsely. (Vol. V, p. 2.) He admitted undertaking to sell evidence under an assumed name and ceased such efforts only when and because told there was no market for it. (Vol. V, pp. 54-58.) Judge Hahn said the plaintiff was approached by one of Clutter's brothers and another with propositions having "a blackmailing aspect." (Vol. II, p. 1098.) Clutter is the kind of a man who passes bad checks. (Vol. II, p. 1000.)

Clutter said he did not know the Notary, he did not know he was signing an affidavit, that it was signed at his home, that he did not know what was in it and did not swear to it. (Vol. V, pp. 45 and 47.) The Notary Burge said he had known Clutter for a year before his affidavit was signed (Vol. V, p. 105), that Clutter signed the affidavit in the Sheriff's office (Vol. V, p. 106), that Clutter swore to the affidavit before him (Vol. V, p. 107), and that either Clutter read the affidavit or it was read to him by or before the Notary. (Vol. V, p. 107.) Downie is a highly respected and useful citizen and one who by the decision of the Courts has contributed materially to the industry where he is employed in important capacity and high authority.

Equity is ranging afield to dismiss the causes on the other patents on the self contradicted word of Clutter against Downie and his supporting witnesses, Elmire, Burge and Oliver.

(g) Since Judge Hahn found that there was no attempt to suppress evidence in the instant cases the Court of Appeals went afield to avenge the alleged wrong through the reliance in the instant cases upon the decrees alleged to have been procured in the Byers case through fraud, but the finding of the District Court in the Byers case was that the decrees there had not been procured through fraud, a finding that the Court of Appeals has thus far refused to disturb. (63 Fed. (2) 996.)

(h) The causes on the fourth and fifth Downie patents were not even in the suit at the time the applications were made for the preliminary injunction. These two patents were added to the suit after the orders denying the preliminary injunctions were entered. The patents were not even issued until after the denial of those applications. Certainly equity will not go the extent of dismissing actions not in being until after the acts upon which fraud is implied, or even found, have been committed.

How far "at large" then must a Court of Equity go to avenge the wrong implied? As to the third and fourth Downie patents it must go to causes which were not in being at the time the wrong is implied to have been committed or when the Byers case was tried and decided or when the instant cases were instituted or until after the preliminary injunction proceedings were instituted. It must go to the Byers case to find a wrong to be implied and imply a wrong which the Judge (Jones) who tried that case found was no wrong and that the witness (Clutter) who charged that there was a wrong had testified falsely about it and, further, found that the subject matter con-

erring which the wrong was said to have been committed was immaterial to any cause involved for three separate reasons.

As to the Clutter and second Downie patents the Court of Equity to imply the wrong must range to the cause on the first Downie patent in the instant suits and thence to the Byers case where the Judge (Jones) found there was no such wrong and that the witness (Clutter) who charges such wrong had perjured himself in making the charge and that, moreover, for three separate reasons the subject matter about which the charge was made was immaterial to the first Downie patent.

Respectfully submitted,

F. O. Richey,
W. H. Boyd,
H. F. McNenny,
Counsel for Petitioner.

APPENDIX A.

The evidence relating to the doctrine of "unclean hands" is not only collateral to petitioner's rights in the instant cases, but it is not sufficient to constitute that degree of reprehensible conduct which amounts to unclean hands as to any cause of action involved in the instant cases.

Furthermore, in its brief opposing the petition for certiorari, the respondents went into the facts relating to the "unclean hands" question. Anticipating that this may be done again, we submit below succinctly the facts upon this subject with specific answers to the contentions made on this subject by the respondents in their brief on the petition.

HISTORY OF THE SUBJECT.

(1) The "unclean hands" question did not appear originally in the Byers Case involving the Clutter, Wagner, first and second Downie patents.

(2) It first appeared in the instant cases wherein the accusing witness Clutter did not appear before Judge Hahn, nor did the Notary nor Oliver. (Clutter's testimony was by deposition; on the subject of unclean hands in a second deposition.)

(3) The Byers Case was then reopened and reheard by Judge Jones upon the order of the Court of Appeals; whereupon Clutter, Downie, the Notary, Oliver and others appeared and testified.

(4) The Court of Appeals reviewed Judge Hahn's conclusions on the subject, but did not review Judge Jones' views on the subject.

It follows that the conclusions of Judge Jones are entitled to great weight because he saw and heard the witnesses himself. His findings of facts, therefore, should not be disturbed under the following authorities: *Adamson v. Gilliland,* 242 U. S. 350, 61 L. Ed. 356; *St. Paul Plow v.*

Starling, 140 U. S. 184, 35 L. Ed. 404; *Backer v. Hook,* 295 Fed. 261, (C. C. A. 6); *Gulf Smokeless v. Sutton,* 35 Fed. (2) 433 (C. C. A. 4); *Pugh v. Snodgrass,* 209 Fed. 325 (C. C. A. 6); *Vandenburgh v. Truscon Steel,* 277 Fed. 345 (C. C. A. 6).

ADDUCING AFFIDAVITS IN ADVANCE OF THE TRIAL.

(1) Every patent lawyer and every patent Court is familiar with the attempts to glorify failures in the art to successes in an attempt to invalidate a patent that has been sustained by the Courts. Too often evidence "is tortured, or fabricated outright" to build up such defenses, to use the terms of this Court (143 U. S. 285), which terms have been adopted and followed by all patent Courts, as the many citations to that opinion prove. A plaintiff has but one defense against this practice and that is to interview those familiar with the facts before there is occasion for them to torture or fabricate the evidence and, if possible, secure affidavits recording and preserving the truth. This obviously commendable practice records the facts as of some time (often years) before the trial and enables a patentee to determine the validity or invalidity of his patent against that defense that he may decide in advance whether to sue on his patent or not. This has come to be the general practice and has checked the evils pointed out in the above quoted terms by this and other Courts. That was the purpose and the only purpose of securing Clutter's affidavit here. (Vol. II, p. 1010.)[12]

---

[12] Mr. Downie testified (Vol. II, p. 1010) as follows:

"A. No, sir, there was no understanding that he was to keep quiet about what he had done at Joplin. In fact *the object was to get into the court definitely and to guard against his mis-recollection just what he had done at Joplin;* and I think I advised Mr. Clutter that I was securing his affidavit for that reason and because the attorneys said that it was advisable to do so in matters of where earlier experiments had been carried along on a line similar to that in question."

Plaintiff knew of what Judge Jones found to be the Joplin abandoned experiment prior to the institution of the first suit on these patents and on the advice of its patent counsel had Mr. R. R. Downie interview a Mr. "Burn" Clutter and Mr. Herbert Wallower and secured from them affidavits of the true character of this Joplin experiment and machine, upon the basis of which counsel advised that the suit be instituted. The facts (with one exception, and that against the plaintiff) in the affidavits were established to be correct and supported by the testimony of many witnesses later taken in the instant cases (Vol. V, pp. 142-146) regarding the Joplin work and experiment, as was found by Judge Jones (Vol. V, pp. 2 to 5) and supported by the conclusions and decrees of Judge Hahn. The Clutter affidavit is printed at page 1319 of Vol. IV of the record, and the Wallower affidavit at page 183 of Vol. III of the record. Nobody has made any complaint about the taking of the Wallower affidavit, but the taking of the Clutter affidavit was thought by Judge Hahn to be "a reprehensible act, a fraud upon the Courts, * * * a fraud on subsequent claimed defendant infringers" and "upon the public." (R. Vol. II, p. 1091.) The Sixth Circuit Court of Appeals also thought that the taking of the affidavit was reprehensible. It does not seem to us reprehensible to record in 1925 the truth of events happening in 1920 that they may the better be preserved for 1930 when they will be testified to, even if the affiants are paid for the affidavits. If the pay were for false affidavits it would be reprehensible. A party seeking to preserve such evidence against efforts to "torture or fabricate" is without the power of subpoena or other legal process and must resort to bargaining to thus record and preserve the truth. It is common to pay experts for affidavits such as are filed under General Equity Rule 48 and to pay others compensation for time, trouble, etc. Clutter was paid for testifying by de-

fendants in these cases (Vol. V, p. 57) and by defendant in the Byers Case. (Vol. V, p. 58.) Counsel for defendants at the trial of the instant cases at Toledo, in referring to their first meeting with Clutter, used the following words:

> "The fact of the matter is when we first got hold of Mr. Clutter he wanted money from us."

What, if any, compensation is paid goes to the weight of the evidence.

It is common to take affidavits regarding such matters for use in interlocutory proceedings, such as applications for preliminary injunctions, and the like. The Patent Office requires that every inventor sign and file with his application an oath relating to prior uses, abandonment, and matters of that kind. If it were reprehensible to go out and get such an affidavit as Clutter's affidavit, the whole practice in the Patent Office and in procedures on interlocutory proceedings in litigations would be reprehensible for the same reason.

The adducing of the affidavits was, therefore, done on the advice of counsel as the only means of meeting a situation that has been pointed out by this and a hundred other Courts as deplorable with at least the implied suggestion that there ought to be a remedy for it. The Courts have time and again deplored that this evidence in patent cases is so stale when it is submitted to the Court. We know of no way to preserve it except by recording it in affidavits.

The claim by Clutter that he did not know he was signing an affidavit was, as Judge Jones said, effectively controverted by the Notary before whom he swore to the affidavit. (Vol. V, p. 2.)

The conclusion of the Court of Appeals that the Clutter affidavit was "possibly not in strict accord with the facts" is erroneous. (Vol. V, pp. 140-144.)

(2) **The purchase of patent rights whose value is contingent upon the outcome of litigation for consideration contingent on the litigation** is also common, if not universal, in view of the failure of so many patents when put to the test of litigation.

Clutter claimed to have patent rights in the Joplin machine. Mr. Downie then believed he had an application in the Patent Office for a detail of the scoop (Vol. II, p. 997) and agreed to purchase the same from him provided the payments should be contingent upon the outcome of the litigation on the Downie patent, No. 1,511,114 to which Clutter's alleged improvements related and which improvements would be of little value if that patent fell. This is the usual modern deal regarding unadjudicated patent rights of all kinds. In view of the uncertain outcome of patent litigation no one nowadays purchases patent rights without basing the remuneration on the outcome of litigation upon which the value of such patent rights depend, since those rights or those upon which they hang may be limited or invalidated altogether in subsequent litigation. Such practice of necessity makes the patent owner, often the inventor, and those allied with him, hostile to infringers or others who challenge his rights. This practice of making patent deals contingent upon the outcome of patent litigation is as common as the adducing of affidavits in advance to prevent torturing of evidence in patent cases. Nevertheless, the Court of Appeals thought it was reprehensible for Mr. Downie to make such a deal with Clutter.

While it would appear that Clutter's compensation was high, examination shows that it was not unusual, especially for the high price days of 1925. A substantial part of the $4,000 credit was necessarily profit of the plaintiff and such expenses as sales expense, demonstration expense was

saved, so that it is fair to say that Clutter was to be paid perhaps about $2,000 for his improvements and the affidavit.

The Amount of the Compensation: In considering the size of this sum one must have regard to the methods of doing business in the ditching machinery trade. Clutter was an old employee of the Keystone Company. (Vol. V, pp. 58.) He had been a demonstrator for the company and was skilled in exhibiting the company's machinery. (Vol. V, p. 568.) Clutter was beating in the New York New Jersey metropolitan districts, the heart of the use of ditching machinery. Those in the market for ditching machinery naturally go about to jobs where the ditching machinery of the rival manufacturer thereof is being employed and watch its use and demonstration by the contractors employing it. (Vol. I, p. 317; Vol. V, p. 88.) Clutter was, therefore, in a position to do the plaintiff much good by way of demonstrating and recommending its machinery to those in the market for such machinery, and it was to the interests of the plaintiff that he should be equipped with the plaintiff's machinery and be in a position to demonstrate it. Moreover, Clutter had been formerly employed by the Keystone Company and were he successful in the contracting business, it would be logical to conclude that he would be a user of the plaintiff's machinery for a good many years to come. It was to the interests of the plaintiff for these reasons also to have Mr. Clutter well launched in the contracting business with the plaintiff's equipment. Every one who has bought an automobile in the last fifteen years is familiar with the great variety of schemes used to reduce the price of the automobile to the particular purchaser without appearing to have cut the list price. When Clutter was failing his appeals for help to the plaintiff, his former employer, and to Downie, who as a boy had worked in the role of an apprentice to him, were difficult to reject. (Vol. II, pp. 999 and 1000.)

It is impossible to divorce the transactions from these human and business considerations.

Clutter's Testimony Opposed to That of Elmire, Oliver, the Notary, Downie, and Others: When news of the sustaining of the patent by Judge Jones came to Clutter, he did just what plaintiff thought he would do and just what this Court said such people will do. (143 U. S. 284 and 285.) It occurred to him that he could make some money ($5,000.00 —or more, he said, Vol. V, p. 54) by suppressing or torturing the evidence one way or the other. Plaintiff was first approached by Clutter's brother and another (Vol. V. p. 1098) with actions having a "blackmailing aspect" to quote Judge Hahn. (Vol. V, p. 1098.) They were rebuffed by plaintiff. Clutter then became extremely hostile to plaintiff and started, under an assumed name, to peddle his evidence for a price among the infringers until someone told him it was "illegal" (Vol. V, pp. 54-55) and it not occurring to him that "it might be honest to give it for nothing," to quote Judge Jones (Vol. V, p. 55), the matter rested until his deposition was taken in the instant cases.

Clutter, or whoever was advising him, found his affidavit standing in the way of torturing the evidence, so it must have been planned, for effort was made, to obviate it by denial by Clutter that he had executed it. This testimony was, as Judge Jones said, effectively controverted by the Notary before whom the affidavit was executed. (Vol. V, pp. 105 and 107.) Judge Jones found Clutter to be dishonest and that his evidence could not be believed. (Vol. V, pp. 2 to 4.) Clutter and the Notary were not before Judge Hahn. Clutter's accusations were denied by Mr. Downie and for the most part by a supporting witness Elmire. Much that he said was denied by the Notary, by Oliver and by others.

Judge Jones also found the Joplin work was an abandoned experiment, did not anticipate if proved to be a public

u s and was not proved under the rule in the *Barbed Wire Case*, 143 U. S. 275. Judge Hahn and Judge Jones each sustained the Downie patent No. 1,511,114 over the same Joplin proof that is in the instant cases. These holdings stand undisturbed.

Not until after the defendants in the instant cases had adduced all their evidence on the Joplin defense and found it useless did Clutter raise the claim of suppression.

The whole plot is clear to those familiar with proceedings regarding the efforts to glorify abandoned experiments in patent cases as it was to the learned justices who wrote the opinions of the Court in the *Barbed Wire*, the *Eibel Process* and other cases. The patents in these suits had been well and broadly sustained in the Byers Case against all the pertinent art and defenses well and carefully presented to learned Courts. The defendants in these cases were desperate and vigilant searches developed no defense so good as those already rejected. In these straits Clutter was ready with the evidence he had peddled about to others without success. (Vol. V, p. 57.) At much expense the evidence of Clutter, as the star witness, and many others was taken, with the sole result that the allegations in the Wallower and Clutter affidavits to the effect that the Joplin work was an abandoned experiment; and that the Joplin machine did not anticipate was proved, as Judge Jones later found. Moreover, the evidence found was insufficient to establish the defense, as Judge Jones found.

Time and money had been spent only to strengthen the plaintiff's cause. Then, and not until then, was the suppression theory sprung. But before the suppression theory could be expected to take any hold at all, the Clutter affidavit must be disposed of for who would believe a deal about suppression when the affidavit was executed in a Sheriff's office, or who would believe Clutter did not know he was signing an affidavit when he signed the paper in the

Sheriff's office? The Sheriff's clerk was a law officer and the Sheriff's office was a law office. Whoever planned the Clutter story, found by Judge Jones to be false, knew that nobody would believe Clutter if he said he went with Downie and Elmire to the Sheriff's clerk in the Sheriff's office to sign an agreement to suppress evidence. Hence Clutter told the tale that he did not know the notary, he did not know he was signing an affidavit, he did not swear to it, it was signed at home, etc., all of which was false as the Notary and Mr. Downie and Mr. Elmire testified and as Judge Jones found. Defendants paid Clutter for this testimony which turned out to be false. (Vol. V, pp. 57 and 58.)

Is it any more of a fraud on the Courts and the public to pay Clutter for an affidavit which turned out to recite the truth than to pay him for testimony which turned out to be false?

Clutter did not intentionally admit that he had not suppressed the evidence. He did so unwittingly. He is a dullard as well as dishonest and careful questioning quickly developed the falsity of his claims. (Vol. V, pp. 35 to 50.)

From all this it results that one speculating could more easily imply one of those conspiracies to fabricate or torture evidence which this Court has found so common in these cases and conclude that Clutter's perjury to establish "unclean hands" by the plaintiff was planned than to "imply" that Clutter was intended to be placed under suppressive influence by the plaintiff.

That Clutter repudiated his affidavit is certain. That he said he suppressed evidence that he did not suppress; that his story of the circumstances and the locality of the signing of his affidavit were false and deliberately planned to be falsely represented and testified to, are certain. We say without fear of contradiction that Clutter has since repudiated his evidence of these circumstances and locality

and said that Downie and the notary testified correctly with regard thereto. It results that "the blotch" may not be on the plaintiff's escutcheon after all, but it is certain that the blotch, if any there is, is small and doubtful, and certainly not such as would justify a Court of Equity in ranging from cause to cause and suit to suit to avenge it.

Argument: The particular points raised by the respondents in their brief on the Petition we now answer specifically:

They say there was fraud. Judge Jones who was the only judge who saw and heard the witnesses found otherwise. (Vol. V, pp. 2, 109; Exhibits "A" and "F".)

They say there was a public use at Joplin. Judge Jones decided otherwise. (Vol. V, p. 2.) Judge Hahn sustained the patent in the face of such proof as did Judge Jones. No Court has held to the contrary.

They say the Joplin experiment anticipated the Downie patent. Judge Jones found it did not. Judge Hahn and Judge Jones sustained the patent in the face of the proof. No Court has held to the contrary. They themselves charge that only claims 6, 9, 10, 12 and 13 read directly on the Joplin machine.

They claim the Downie patent was the principal patent upon which these suits have been brought. This is not correct. The Clutter patent is the principal patent and was so found by all the Courts. (*Byers vs. Keystone*, 44 Fed. (2) 283, 284.)

They say the records upon which the unclean hands is based were forced out of our hands by their activities in uncovering the evidence. This is incorrect. We produced them upon request as soon as we learned Judge Hahn thought the evidence should be submitted.

We offered to produce it without an order. A motion of the respondents to compel such production was thereupon denied. (Vol. I, p. 205; Vol. II, p. 1099.)

They claim that the patents are so related to each other that fraud as to one is fraud as to all. This is answered by the fact that the Court of Appeals said that they might be separated in the District Court. (Vol. V, p. 124.) The fact that the Court of Appeals said they might be separated in the District Court is also answer to the conjoint use contention.

They said that the adjudication in the Byers Case was "fraudulently obtained" but Judge Jones, the trial Judge in that case and the only Court specifically ruling on that question, held the contrary and the Court of Appeals dismissed the attempted appeal therefrom.

They say a public use was suppressed by the Keystone Driller Company and a fraudulent decree obtained, but Judge Jones found there was no public use and "no suppression of evidence materially affecting the defendant's rights." The Court of Appeals dismissed the efforts to have this ruling reviewed and it stands today a final ruling on that question.

Contention of the Parties: It is the contention of Mr. Downie, the plaintiff and of counsel for plaintiff that the considerations offered to be paid and which were paid to Clutter were (1) for his interests in whatever invention he may have thought to have made on the Joplin machine at the time of the agreement that were patentable and (2) for the execution of the affidavit. All of the written documents in evidence support this position. The proposed agreement of April, 1925 (Vol. IV, pp. 1298 and 1299), supports that contention. So does the statement in the letter of Clutter to Downie on the 13th of November, 1928. (Vol. IV, pp. 1315 to 1316.) So does the letter of Downie to Clutter at Vol. III, p. 246.

There is no statement in any of these many letters that any of the consideration agreed to be paid or paid was for the suppression of Clutter's testimony.

The claim that there was any agreement or any consideration paid for the suppression of evidence depends entirely upon inferences which the facts do not warrant. Thus Judge Hahn said (Vol. II, p. 1089):

> "It seems to me that while many of his (Downie's) acts, *taken singly*, might be explained upon such a basis, *the effect of all of them* is to condemn his conduct as highly reprehensible."

Some of these acts, such as the choice of words, seem to us unimportant. Thus he said (Vol. II, p. 1089):

> "The use of the words 'experimentation' and 'abandoned' in the affidavit it seems to me were particularly reprehensible under the circumstances of this case."

It is difficult to come to the conclusion that fraud or unclean hands could result from the selection of words.

Many of the "acts" from which these inferences were drawn were found to be erroneous when Clutter was brought in person before the Court.

Thus Judge Hahn said (Vol. II, p. 1090):

> "There is no doubt that because of the signing of the contract and the offer of the consideration partly contingent upon the litigation, Clutter was kept *in a quiescent state* until after the decree had been entered in the Cleveland case, and all of Downie's acts and efforts were designed to bring about that result."

Before Judge Jones, Clutter admitted that instead of being kept in a quiescent state, he had told a number of people about the Joplin work and machine during the period when Judge Hahn had erroneously thought that the acts of Downie had kept him in a quiescent state. (Vol. V, pp.

35 to 50.) To the same effect was the testimony of Mr. Smith. (Vol. V, p. 72.)

There are a number of other things besides the testimony before Judge Jones which are inconsistent with a conclusion that the deal was for the suppression of evidence and not for Clutter's rights and the signing of his affidavit, as Downie said and as Clutter said up until the time of the taking of his second deposition in the instant cases.

(1) It is significant that just prior to any period of important activity in the Byers Case there was a row between Clutter and the plaintiff. The trial of the Byers Case began September 15, 1927. Clutter's first machine was repossessed by plaintiff in June, 1927. On August 11, 1927 plaintiff repossessed the second of Clutter's machines over his protests and threats of what he would do to the plaintiff. (Vol. V, p. 73.) If plaintiff had been keeping him quiescent or under suppression, certainly plaintiff would not have thus repossessed his machines and embittered him just prior to the trial of the Byers Case.

On the contrary whenever Clutter during the period when he claimed to be under suppression made threats (Vol. V, p. 59) to the plaintiff that he would talk about the Joplin work, which he admitted he did (Vol. V, p. 59), the plaintiff told him that "he could tell whom he pleased about that Joplin work and experiment." (Smith, Vol. V, p. 73.) He was told this, for example, about a month before the beginning of the trial in the Byers Case. Mr. Downie testified (Vol. II, p. 104) as follows:

> "There was more than a little of threat finally apparent when our New York office advised him (Clutter) that they had been ordered unequivocally to proceed, and it could amount to nothing more nor less in my own layman's understanding of the term of blackmail, even though Mr. Clutter was friendly; it was just that he seemed to believe that by my transaction

with him in 1925 I was making some effort to enlist his good graces, and that the deferred payment was for that purpose, to keep him hushed. *Now, I told him in 1927 that for all of me or of us he could put anything and everything he knew in as many newspapers as he liked;*"

and at page 1032:

"But as to our fear of his relating to the Byers Company, or any other, what he had one at Joplin, I said, as I said previously, *he could put that in the newspapers if he wanted to;*"

(2) The Byers case was argued before Judge Jones on January 9, 1929 and decided by him January 23, 1929. During November and December there was correspondence between Clutter and Mr. Downie in which Clutter demanded more money and in which Downie refused to give him any more money. This correspondence culminated in the letter of December 17, 1928 (Vol. III, p. 246), which was a reply to a communication from Clutter in which he had called Downie and the plaintiff "all these hard names." Certainly if Clutter had been paid to suppress evidence, plaintiff would not have antagonized him to such an extent that he called the plaintiff and Downie many hard names just about a month before the Byers Case was argued before Judge Jones.

(3) It would have been a futile thing to do to undertake to suppress Clutter's testimony regarding the Joplin work because that work was done outdoors and seen by thousands of people, many of whom were contractors and others skilled in the art who understood what was being done. (Vol. V, pp. 88, 41.) Clutter did not know as much about the details of the Joplin device as others. (Vol. V, p. 42.) Clutter was in no better position to say whether the work was an abandoned experiment or a public use than Wallower, Oliver, or many others who saw the work.

(4) A copy of the affidavit of Clutter was given to plaintiff's solicitor, who kept it independently of the copy that was kept by Mr. Downie. The Wallower affidavit was adduced by Mr. Oliver who was familiar with its contents as, of course, was Mr. Wallower. These things we say evidence an intention to record and preserve and not to suppress the evidence.

(5) Mr. Downie and the plaintiff disclosed all of the information he had regarding the Joplin work and machine to the various patent counsel representing the plaintiff in the Byers Case and in the instant cases with the suggestion that counsel disclose the information regarding the Joplin work and machine to the trial Court if that were the proper procedure. (Vol. II, pp. 993 to 995.) Mr. Downie also discussed freely and disclosed all he knew about this Joplin experiment and work to his solicitor, Mr. Siggers and to others, including Oliver and Ransom, and other employees of the plaintiff coming and going, when there was occasion to discuss it. (Vol. II, pp. 989, 991, 1029, 1030 and Vol. V, p. 100.) None of these were placed under or even asked to remain secret or suppress evidence about the Joplin work or machine. On the contrary, one of these at least, Hazen, was commissioned to go forth on an errand which necessarily involved disclosing the Joplin story and machine to many people. (Vol. II, pp. 994, 995, 1031.)

The Courts Below Made Inferences as to Unclean Hands Unwarranted by the Record. (Vol. II, p. 1089; Vol. V, pp. 120, 123.) We will now discuss these inferences:

(1) Mr. Downie said that at the time he agreed to give Clutter the credits he believed that Clutter had a patent application on some detail of the machine at Joplin which might be important in supplementing the patents of the Keystone Driller Company upon this ditching machine

(Vol. II, p. 997), and that though later he learned that Clutter had no such patent application, the company was honest enough to carry out the agreement which it had made. Judge Hahn thought that Downie was too clever to thus buy a pig in a poke. (Vol. II, p. 1091.) Yet always prior to his second deposition Clutter himself said that the credit was given for what he calls his invention. (Vol. IV, p. 1916.) All of the witnesses who testified upon this subject, both for defendants and for plaintiff, are agreed that the credit was in part payment for such improvements as Clutter might have. Therefore this inference is contrary to all of the testimony in the record.

(2) The Court of Appeals said Downie filed the application for his patent without thoroughly investigating the Joplin work and machine. This is contrary to the testimony. (Vol. II, pp. 989 and 1029.) All of this was reported to Mr. Siggers who was then the patent solicitor for the plaintiff.

The learned Judges of the Court of Appeals thought that after the issue of the Downie patent, there was doubt and uneasiness on the part of the plaintiff regarding the Joplin use. (Vol. V, p. 120.) The record shows, however, that investigation was made not because of any doubt or uneasiness, but on the recommendation of Mr. Siggers, the patent lawyer of the company, that the information regarding Joplin be recorded and preserved "*for the purpose of recording the facts of it against any possible misunderstanding, subsequent misunderstanding, of those facts.*" (Vol. II, p. 991.)

(3) The learned Judges of the Court of Appeals said (Vol. V, p. 121)—

> "The decree in the Byers Case was finally entered January 31, 1929, and it was not until about that time that the payment of any further consideration to Clutter was definitely refused."

The decree in the Byers Case was finally entered January 23, 1929. Prior to December 17, 1928, the plaintiff had so definitely refused to pay Clutter any more money that the controversy over the same had resulted in Clutter calling the plaintiff "all these hard names." (Vol. III, p. 240.) As we have elsewhere said, this was before the Byers Case was argued before or decided by Judge Jones.

(4) The learned Judges of the Court of Appeals thought that the Clutter affidavit was "possibly not in strict accordance with the facts." With the exception of one error which is against the plaintiff, the affidavit was in accordance with the facts. (Vol. V, pp. 141 to 144 and the references to the record contained therein.)

(5). The Court of Appeals thought that the taking of the affidavit would make Clutter "an adverse witness for others." The record shows that instead of being adverse to others, he was not only adverse but hostile to the plaintiff when he testified. (Vol. II, p. 1099.)

(6) The learned trial Judge (Hahn) thought that the failure of the plaintiff to call Oliver and Smith, who were available to the plaintiff, should be construed against the plaintiff. These witnesses were called before Judge Jones and their testimony is at Volume V, pages 70 to 105 of the record. We did not call them in the instant causes because, as Judge Hahn said, all the alleged suppressed evidence was in these cases.

(7) The learned trial Judge (Hahn) thought that Clutter was the only man who could testify as to the details of the Joplin machine (Vol. II, p. 1093), but the record shows that others knew the details as well, if not better, than did Clutter. (Vol. V, p. 42.) Clutter was only an operator of the machine; the others who knew the details better were those who constructed the machine and made the numerous changes that were made in it in an effort to make it successful.

(8) Judge Hahn thought that "the clear tendency of the contract was to keep Clutter silent, or, if he testified, to make him a witness hostile to claimed defendant infringers." As we have said, the record shows that Clutter was not silent. (Vol. V, pp. 35 to 50 and p. 72.) The record shows also that instead of the agreement making him hostile to the defendants, it made him hostile to the plaintiff. (Vol. V, p. 50; Vol. II, p. 1099.)

(9) Judge Hahn said (Vol. II, p. 1094):

> "Whatever the witnesses observed and whatever they might be able to testify to, Clutter was the one man who could take the position and make an affidavit that the work at Joplin was an experiment and that it had been abandoned."

The Wallower affidavit took both of these positions. (Vol. III, p. 183.) Mr. Oliver testified to both of those things (Vol. V, pp. 84-89), and what is more important Judge Jones took both of those positions. (Vol. V, pp. 2 to 5.)

(10) The Court of Appeals thought that the decision in the Byers Case was an important factor in the prosecution of the application for preliminary injunctions in the instant cases. On this subject they said (Vol. V, p. 119):

> "Those motions were denied, but in lieu of granting them the defendants were required to give bonds conditioned upon the payment of all profits and damages which might be decreed against them, and such bonds were in fact given. In this respect and to this extent *the decision of the District Court in the Byers case became an important factor in the prosecution of the present actions.* Later, when this court affirmed the decree of the District Court, the effect of the Byers case became even more apparent."

Judge Hahn, however, said that at the time these motions for temporary injunctions were presented, he was so impressed with the new defenses and the additional evi-

dence as to prior art that he denied the injunctions, thereby ignoring the adjudications in the Byers Case. He himself said that:

> "*in the circumstances I do not think that Orgin[illegible] the binding effect of the decisions in the Byers Case was in any sense a fraud upon this Court*, even if there had been suppression in the Byers Case of such a nature that this Court would notice it as having a bearing when it comes to the decision of the merits of these cases." (Vol. II, p. 1096.)

It would seem to us that Judge Hahn's statement that the Byers decisions had no effect upon him is a safer guide than the Court of Appeals' belief that it did have some effect upon him.

Thus we find that substantially all of the inferences which Judge Hahn and the Court of Appeals relied upon to build up their findings of fraud are in error. It is true that some of these were not proven to be in error until the matter was aired out fully before Judge Jones.

Judge Jones' conclusion that there was no fraud or suppression was not based upon any inferences at all, but is a straight finding from the evidence which was submitted to him and to him only. He did not imply or deduce or undertake to argue his auditor into such findings as that Clutter's "testimony is false," "his credibility has been so impaired as to effectually destroy its weight," "there was no suppression affecting the rights of the defendant," "Clutter was under no suppressive influence or obligation at that time respecting his alleged invention or prior use," "the Joplin machine was not satisfactory and was never perfected," "it was an abandoned experiment," it did not constitute "anticipation of the Downie patent," "I find myself unable to visualize a completed and successful invention at Joplin. *The Barbed Wire Patent*, 143 U. S. 275, 284, 289." He found these things definitely and conclusively and moreover, decreed them.

It results from all of these things that the facts are that there was a private conversation between Mr. Clutter and Mr. Downie in April, 1925. Mr. Clutter says that Mr. Downie then and there agreed with him to suppress the evidence. Mr. Downie denies that he did. With whom does the corroboration lie? The facts are that after the conversation both Mr. Downie and Clutter went forth and talked about the Joplin work and the Joplin machine to anyone whenever they had respective occasions to do so. Clutter testified (Vol. V, pp. 35 to 50) *that he talked to Mr. Wagner, Mr. Matthews, Mr. Burd Clutter, Mr. LeRoy Clutter, and perhaps to others. Mr. V. C. Smith* (Vol. V, p. 72)*-said that Clutter talked with him about it. Mr. Downie talked to Mr. Hazen, Mr. Ransom, Mr. Oliver, Mr. Culbertson, Sr., Mr. Culbertson, Jr., Mr. Siggers, Sr., Mr. Janney, Mr. Siggers, Jr., Mr. Richey and [illegible] others. In addition Mr. Downie commissioned Mr. Oliver to go forth and talk to Mr. Wallower and Mr. Hazen to talk about it to anyone who might be thought to know where one of the old Joplin scoops could be found. Mr. Smith talked of the subject here and there on his own authority.*[18] *These facts corroborate Mr. Downie's story and dispute Mr. Clutter's story.*

---

[18] The following illustrates not only how general was the discussion of the plaintiff's representatives, but of everybody else regarding this Joplin work. Mr. V. C. Smith testified as follows (Vol. V, pp. 77 and 78):

"Q. Did you make any trips out west between 1925 and September, 1927?

"A. Yes, sir.

"Q. And what was the earliest ones of those trips?

"A. The latter part of '25, I believe.

"Q. And did you on that trip talk with anybody about this Joplin machine and Joplin work?

"A. I did.

"Q. With whom?

"A. Mr. Lisle Hazen, Mr. Eugene Blosser, Mr. Carter,—the first name I don't know.

"Q. J. L. Carter?

"A. I don't remember his first name.

(Footnote continued on page 38.)

The burden was upon the respondent to prove by clear and convincing evidence that the credits were given to Clutter for fraudulent purposes. In undertaking to meet this situation, respondent claims that the credits were for (1) suppressing the evidence and (2) for procuring an affidavit not in strict accordance with the facts. The first proposition is disposed of by the proof which we have above summarized to the effect that the evidence was not only not suppressed, but was broadcast by both Clutter and the

"Q. Anybody else you remember?

"A. A contractor in Tulsa, Canady, or something like that.

"Q. H. L. C-a-n-a-d-y?

"A. I believe that is it.

"Q. What did he say to you?

Mr. Zane: Object to it as hearsay.

The Court: Objection sustained.

"Q. Did you also talk to Mr. Eugene Blosser?

"A. I mentioned Mr. Blosser's name.

"Q. Mr. H. C. Hutchison?

"A. Yes.

"Q. Mr. Dell Willard?

"A. I am not certain of Mr. Willard, whether I am confusing him with another man who is located at the plant. I did talk with someone who was at the plant, who had been there during the time this was tried and the experiment discontinued.

"Q. Have you named all you talked to on the first trip to the Joplin work or Joplin experiment?

"A. I think so.

"Q. When was you next trip out there?

"A. Possibly four or five months later.

"Q. And did you talk to anyone on that trip?

"A. More or less the same men. On that particular trip I took Mr. Blosser and Mr. Hazen down to Texas to investigate the possibilities of establishing several agencies through the West.

"Q. Did you talk to Mr. Ross Blake?

"A. I talked to him at a bridge party one night about his watching the experiments being made.

"Q. When was that?

"A. That was on my first trip to Joplin. Mr. Blake was my direct superior, and former secretary.

"Q. What was the date of that trip?

"A. 1925, I think. I am unable to give you the dates exact."

Keystone Driller Company. The second proposition is disposed of by the evidence that the affidavit recites the facts as proved by the adduced evidence, the Wallower affidavit and by Judge Jones' opinion.

In this situation respondent undertakes to prevail by pointing out that Mr. Downie was worsted in the deal wherein a part of the credit was given for such rights as Clutter might have in any inventions he had made in the Joplin machine. We do not think that fraud can be inferred from the fact that Mr. Downie was worsted in the deal. People are frequently worsted in patent deals.

Conclusion: The respondents then have on their side of the slate the conclusions of Judge Hahn and the Court of Appeals that there was fraud which was built on inferences which were unwarranted.

The petitioner has on its side of the slate that substantially all of these inferences are shown to be incorrect and the positive finding by Judge Jones that there was no fraud, at least none affecting the defendants' rights.

The rule is that fraud can be established only by evidence proving it clearly and convincingly. It seems to us that not only was fraud not proved beyond a reasonable doubt in the instant case, as is apparent from the fact that the Courts had to resort to inferences, but that we have proved in Judge Jones' court beyond a reasonable doubt that there was no fraud, and that the latter ought to have prevailed since Judge Jones was specifically assigned by the Court of Appeals to look into the question of fraud, to see and to hear witnesses that Judge Hahn had not seen nor heard, to investigate this question of fraud carefully and report it, all of which he did.

Respectfully submitted,

F. O. Richey,
W. H. Boyd,
H. F. McNenny,
Counsel for Petitioner.

APPENDIX B.

UNITED STATES CIRCUIT COURT OF APPEALS
FOR THE SIXTH CIRCUIT.

No. 5433.

THE BYERS MACHINE COMPANY and
BYERS MACHINE COMPANY,
Appellant,

vs.

KEYSTONE DRILLER COMPANY,
Appellee.

THE BYERS MACHINE COMPANY and
BYERS MACHINE COMPANY,
Plaintiffs,

vs.

KEYSTONE DRILLER COMPANY,
Defendant.

DECIDED JUNE 30, 1931.

Before DENISON AND HICKS, *Circuit Judges.*

PER CURIAM: The application of the original defendants in these cases, praying that leave be granted to the District Court to entertain a bill of review came on to be heard. In view of the arguments and consents of counsel, we think proper to indicate a disposition that will seemingly protect all interests, as far as may be.

We suggest that the decree be entered in the Toledo case, immediately. We see no way in which we can at

present, pass upon the Clutter-Downie-affidavit controversy, or its effect, if any, upon this suit. The record on appeal of the Toledo case can be expedited, this case can be advanced and heard early in the October term. That will bring the matter promptly before us. In the meantime, in the Byers case all these new proofs can be put in before the Master and reported by him to the Court with his accounting report and without delaying that. Counsel will stipulate that copies of the Toledo depositions may be so used, except the Clutter deposition. As to that, he as well as Downie should, if possible, be produced in open court before the District Judge. Upon proof that it is impossible to get Clutter to attend the trial, defendants may take his deposition, giving due opportunity for cross examination. The consideration by the District Court of all proof as to the Joplin use or the Downie-Clutter affidavit matter, will be with the same effect as if the Bill of Review had been entertained. We will make any formal orders necessary to carry this plan into effect.

Entered: June 30, 1931.

FILE COPY

FILED
OCT 18 1933
CHARLES ELMORE CROPLEY
CLERK

In the Supreme Court of the United States

OCTOBER TERM, 1933.

KEYSTONE DRILLER COMPANY,
Petitioner,
vs.
GENERAL EXCAVATOR COMPANY,
Respondent.
No. 34.

KEYSTONE DRILLER COMPANY,
Petitioner,
vs.
GENERAL EXCAVATOR COMPANY,
Respondent.
No. 35.

KEYSTONE DRILLER COMPANY,
Petitioner,
vs.
THE OSGOOD COMPANY,
Respondent.
No. 36.

KEYSTONE DRILLER COMPANY,
Petitioner,
vs.
THE OSGOOD COMPANY,
Respondent.
No. 37.

REPLY BRIEF FOR PETITIONER.

FRANK O. RICHEY,
WILLIAM H. BOYD,
H. F. MCNENNY,
Counsel for Petitioner.

THE GAZETTE LEGAL PUBLISHING CO., CLEVELAND, OHIO

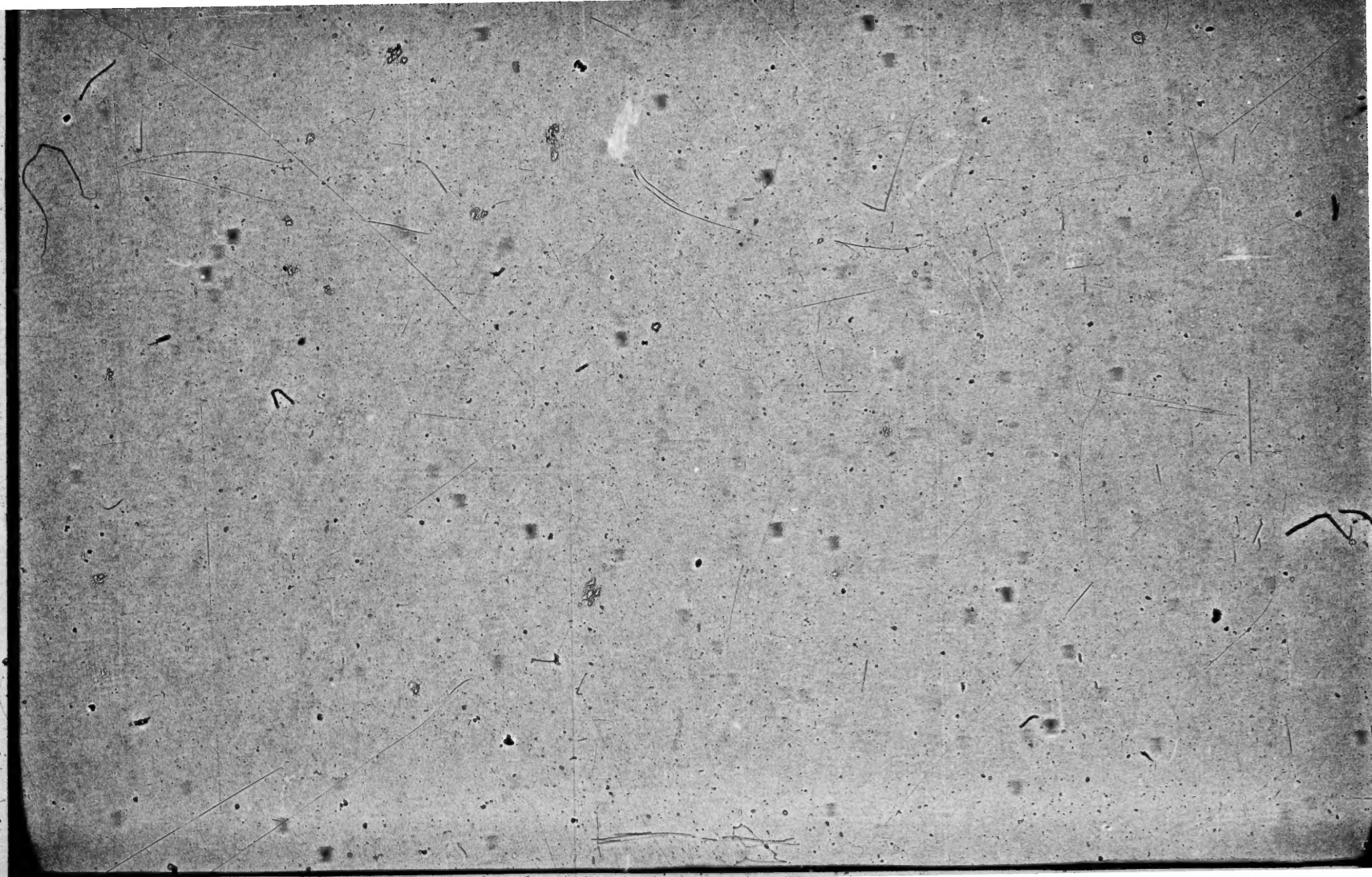

In the Supreme Court of the United States

OCTOBER TERM, 1933.

KEYSTONE DRILLER COMPANY,
Petitioner,
vs.
GENERAL EXCAVATOR COMPANY,
Respondent.
No. 34.

KEYSTONE DRILLER COMPANY,
Petitioner,
vs.
GENERAL EXCAVATOR COMPANY,
Respondent.
No. 35.

KEYSTONE DRILLER COMPANY,
Petitioner,
vs.
THE OSGOOD COMPANY,
Respondent.
No. 36.

KEYSTONE DRILLER COMPANY,
Petitioner,
vs.
THE OSGOOD COMPANY,
Respondent.
No. 37.

REPLY BRIEF FOR PETITIONER.

FRANK O. RICHEY,
WILLIAM H. BOYD,
H. F. MCNENNY,
Counsel for Petitioner.

Authorities Cited.

Barbed Wire Case 7

Bissell v. Goshen, 72 Fed. 545, 554 (C. C. A. 6) 4

Byers Case 3, 5, 7

Carrington vs. Pratt 2

Leeds & Catlin vs. Victor, 213 U. S. 301 2

Maatschappij vs. Kosloff 2

Meyerfield Case 3

Paper Machine Case 7

Wooster v. Handy, 23 Fed. 49, 56 (C. C. N. Y.) 4

21 *Corpus Juris* 641, Secs. 820, etc. 4

Cyclopedia of Federal Procedure, Vol. 4, Sec. 1010 4

In the Supreme Court of the United States

OCTOBER TERM, 1933.

KEYSTONE DRILLER COMPANY,
Petitioner,
vs.
GENERAL EXCAVATOR COMPANY,
Respondent.
No. 34.

KEYSTONE DRILLER COMPANY,
Petitioner,
vs.
GENERAL EXCAVATOR COMPANY,
Respondent.
No. 35.

KEYSTONE DRILLER COMPANY,
Petitioner,
vs.
THE OSGOOD COMPANY,
Respondent.
No. 36.

KEYSTONE DRILLER COMPANY,
Petitioner,
vs.
THE OSGOOD COMPANY,
Respondent.
No. 37.

REPLY BRIEF FOR PETITIONER.

The brief of the respondents was served on us on the morning of October 16, 1933. At the same time we were notified by the Clerk of this Court that the cause would probably be heard by this Court on October 18, 1933, making it necessary for us to leave Cleveland for Wash-

ington on the night of the 16th to be certain that we would be present at the hearing on the 18th, or even possibly on the 17th. Of necessity this Reply Brief has been hastily prepared. We have not had time to answer all of the contentions or to correct all of the errors in the Respondents' Brief in the few hours available to us to reply to the belated brief of Respondents.

We ask the Court for leave to file this Reply Brief and that the Court consider it.

(I) Downie patent No. 1,511,114 (the alleged tainted one) contains fourteen claims, each claim of which, under the authority of this Court, is for a separate invention. (*Leeds & Catlin vs. Victor*, 213 U. S. 301.) The claims are divided into three groups, relating to separate and distinct combinations; claims 1 to 5, so distinct from the others that they are not involved in this suit, being the first group, claims 7 and 8 the second group, and claims 6 and 9 to 14 being the third group. If we were admitting that there was "unclean hands" concerning the group of claims (6, 9, 10, 12 and 13) charged to be anticipated by the Joplin work in the instant cases, (Vol. II, pp. 636 and 638) and then asking the Court to hold that there was no "unclean hands" with respect to the claims (1 to 5, 7 and 8 and 11 and 14) not claimed to be anticipated by the Joplin work, we would come in principle within the authorities relied upon by the Respondents, such as the Bottomry Bond Case (*Carrington vs. Pratt*) where it was found that there was fraud with respect to parts of a single document or cause. We are not, however, making such contention. The several patents in suit are separate grants, separate documents and separate causes of action, and the cause of action on each is different from the cause of action on the others. That is the distinction that was made by the Second Circuit Court of Appeals in the case of *Maatschappij vs. Kosloff* and by the Ninth Circuit Courts in the

Meyerfield case and by the other Courts in the cases which we have relied upon.

(II) It is contended that we are incorrect in saying that the Court of Appeals said that we came into the Court with "unclean hands" with respect to one patent only. The Court of Appeals ordered the reopening and the rehearing in the *Byers Case* before the District Court on "unclean hands" with respect to the one patent only. (Vol. V, p. 109.) The District Court in the instant cases found that the reprehensible conduct related to one patent only. In its opinion the Court of Appeals not only said that the necessary connection between the suits would have been lacking if the plaintiff had based its action only upon the other patents in suit than the one to which the fraud was alleged to be attached, but also ordered that if the present suits were dismissed new suits might be prosecuted in equity upon the other patents in suit except patent No. 1,511,114 and that plaintiff might even commence anew an action in equity upon all of the patents including the sullied patent. (Vol. V, pp. 123 and 124.)

The parties so treated the matter in the Court of Appeals and the Court of Appeals so understood it, as is clear from the following statement in the Court's opinion on the Petition for Rehearing (Vol. V, p. 157):

> "Two principal contentions are advanced in support of the petition for rehearing. The first is that the original action is founded upon alleged infringement of five patents and that the bill should not be dismissed as to the *four patents to which the 'unclean hands' had no application.*"

Respondents erroneously contend:

(1) That Judge Hahn clearly indicated that he found the Clutter and first Downie patents invalid. He found each of these patents valid and infringed and so held in the decrees which were entered. (Vol. II, pp. 1107 and

1137.) A Court speaks through its decrees. (*Bissell v. Goshen*, 72 Fed. 545, 554 (C. C. A. 6); *Wooster v. Handy*, 23 Fed. 49, 56 (C. C. N. Y.); 21 *Corpus Juris* 641, Secs. 820, etc.; *Cyclopedia of Federal Procedure*, Vol. 4, Sec. 1010.)

(2) That the evidence taken before Judge Jones in the *Byers Case* is not properly before this Court.

(a) It was duly presented in the record and no motion for diminution has been made, as must have been under Rule 17 of this Court.

(b) The sole claim of fraud in the instant cases is based upon alleged presence of fraud in the *Byers Case*. Respondents complain because we go to the record in the *Byers Case* and the opinion of the trial Court in that case to show that there was no fraud in that case and that the trial Court there so held. Even so, respondents do not dispute the propriety of this Court referring to the decree in the *Byers Case*, holding that there was no suppression of evidence materially affecting the defendant's rights and that the Downie patent No. 1,511,114 was valid and infringed in the face thereof, which decree is at Vol. V, pp. 109 and 110. The opinion of Judge Jones on this question now appears at 4 Fed. Sup. 160. Respondents' sole claim for fraud in the instant cases is based upon the claim that the decree in the *Byers Case* was procured through fraud and complains that we go to the record and the decision in the *Byers Case* to show that there was no fraud there and the Court so held and so decreed and to rebut the claim and evidence in the instant case said to establish fraud there.

(c) Respondents complain because we do not include in Volume V all of the record in the *Byers Case*. The relevant testimony whose absence is complained of is in the instant cases. (Vol. III, pp. 988-1041, and 1061-1062 and the testimony stipulated from the instant cases recited in the decree, Vol. V, p. 109.) Respondents were at full liberty to file any and all of the record in the *Byers Case* that they wished to file, but filed none.

(d) All the evidence in the record here was before the Court of Appeals when it handed down its opinion which is before this Court for review.

Of what avail would any evidence in the instant cases to the effect that there was fraud in the *Byers Case* be against the record in the *Byers Case* which showed there was no fraud? Any evidence in the instant cases that there was fraud in the *Byers Case* would be secondary. The record in the *Byers Case* would be the primary record evidence as to whether or not there was fraud in that case. The conclusion of any witness or the trial Judge in the instant cases that there was fraud in the *Byers Case* would be secondary. The best opinion evidence on that question would be the conclusion of the trial Court in the *Byers Case*. The best evidence as to whether or not the decrees in the *Byers Case* were procured by fraud is the decree of the trial Court there in which he held that the decree in that case was not procured through fraud. (Vol. V, pp. 109 and 110.)

(3) That the patents in suit are treated as "a single development in the art." Each of the patents in suit is a separate grant. They were issued on dates widely separated from each other and represent separate and several steps in the art.

(4) That Mr. Downie testified as to the number of machines sold without distinguishing the machines of one patent from another. The record shows (Vol. I, p. 231) that he testified that about six hundred machines of the Clutter patent had been sold, and at page 252 of the same volume, he testified as to the number of machines made under the first Downie patent.

(5) That defendant demonstrated but one machine. Defendant demonstrated in the Court a Clutter patented machine, Plaintiff's Exhibit P-15 (Vol. I, p. 235) and a second machine, Plaintiff's Exhibit P-17 (Vol. I, p. 245) built

after the first Downie patent. These models were replicas on a reduced scale of the machines of these patents.

(6) That the affidavit says the Joplin machine was abandoned and there is an inconsistency when Mr. Downie says that he paid for Clutter's rights therein. The agreement, however, was not for Clutter's improvements in the excavating machine, but for improvements in a "ditcher scoop" which was a sub-combination of the excavating machines. The agreement itself distinguishes between the "ditcher scoop," which is the sub-combination, and the "excavating machine," which was the machine as a whole. (Vol. IV, p. 1298.) The record shows that though the machine as a whole was abandoned, the scoop itself as a sub-combination was continued to be used. (Vol. II, p. 616; Vol. V, p. 86.)

(7) That Clutter was the key man and that is the reason why effort was made to suppress his testimony while no effort was made to suppress the testimony of the thousands of other people who saw the experiment at Joplin. Clutter, however, was not the key man, as he himself admitted. (Vol. V, p. 42.) He was merely the operator of the machine. Others designed and made the Joplin apparatus and made the efforts to correct its faults without success. (Vol. V, pp. 84 to 89; Vol. I, p. 600; Vol. II, p. 610.)

(8) It is contended that the Joplin machine was a success. This is a conclusion of counsel contrary to the affidavits of Clutter and Wallower and to the finding of Judge Jones and the decrees of Judges Jones and Hahn.

(9) The sketches shown at the bottom of page 55 and on page 59 of Respondents' brief of the alleged Joplin machine are what is known as present day recollection sketches, that is, sketches made by Clutter based on his recollection in 1929 of what happened in 1919 and when he was in the pay of the defendants and hostile to the plaintiff. It is such testimony as this that this Court re-

fused to accept in the *Barbed Wire Case*, the *Paper Machine Case* and the other Courts have refused to accept in numerous cases. The conclusion of Judge Jones on this subject is stated at 4 Fed. Sup. 161 as follows:

> "I find that the Joplin machine was not satisfactory; that it was never perfected to the point of successfully accomplishing the result claimed for it; that it was an abandoned experiment."

It is contended that Downie admitted that the Joplin work was a public use by the taking of the affidavit. On the contrary, the affidavit says that it was experimentation which was abandoned.

(10) On the question of the production of the documents respondent would be fairer if it stated the facts that petitioner opposed the production of these documents on the ground that they were immaterial until it was learned that Judge Hahn expressed the view that he thought they were material and then plaintiff volunteered to produce them whereupon the Court denied the motion of the respondents and the records were produced without further proceedings: (Vol. I, pp. 82 and 83.)

There was no agreement to produce any of these documents prior to that time. Plaintiff up to the hearing before Judge Hahn opposed their production on the ground that they were immaterial which, of course, has been shown to be true as a result of the reopening proceedings in the *Byers Case*.

(11) Many of the charges which respondents make against petitioner are based upon the conclusion by respondents that there was a public use at Joplin, that such anticipated any of the claims or subject matter of the Downie patent, both of which conclusions have been found to be erroneous by all of the Courts who ruled on them.

(12) Respondents complain because we said in our Brief that they paid Clatter for testifying. They, how-

ever, do not deny that they did, and the record shows that Clutter admitted that they did. (Vol. V, pp. 57 and 58.)

(13) That we are in error in saying that respondents charged that only certain of the claims of Downie patent No. 1,511,114 are anticipated by the Joplin work. Respondents at least twice in the record stated that they claimed that only Claims 6, 9, 10, 12 and 13 were anticipated by such work. (Vol. II, pp. 636 and 638.) Moreover, at page 638 of the record respondents went so far as to withdraw Claim 14 from the charge that it was anticipated by the Joplin work.

Claims 1 to 5 of the Downie patent 1,511,114 are not even in suit in the instant cases so that there is not and could not be any charge that they are anticipated.

Conclusion: It does not seem to us necessary for anybody to "imply" or to argue what seems "obvious" to them or to otherwise speculate as to why the compensation was given by the plaintiff to Clutter. Mr. Downie testified that it was given to hold him to the truth about what happened at Joplin. There is nothing inconsistent with any theory of honesty or dishonesty for a man who is investing much more than Four Thousand Dollars in a patent suit and which is of much greater importance than Four Thousand Dollars to him to pay a man whom he knew to be shifty and dishonest even as much as Four Thousand Dollars to hold him to the truth and to prevent his fabricating and glorifying evidence regarding the Joplin work which this Court has said in so many cases happens so frequently in patent cases regarding these old abandoned experiments.

Respectfully submitted,

F. O. Richey,
W. H. Boyd,
H. F. McNenny,
Counsel for Petitioner.

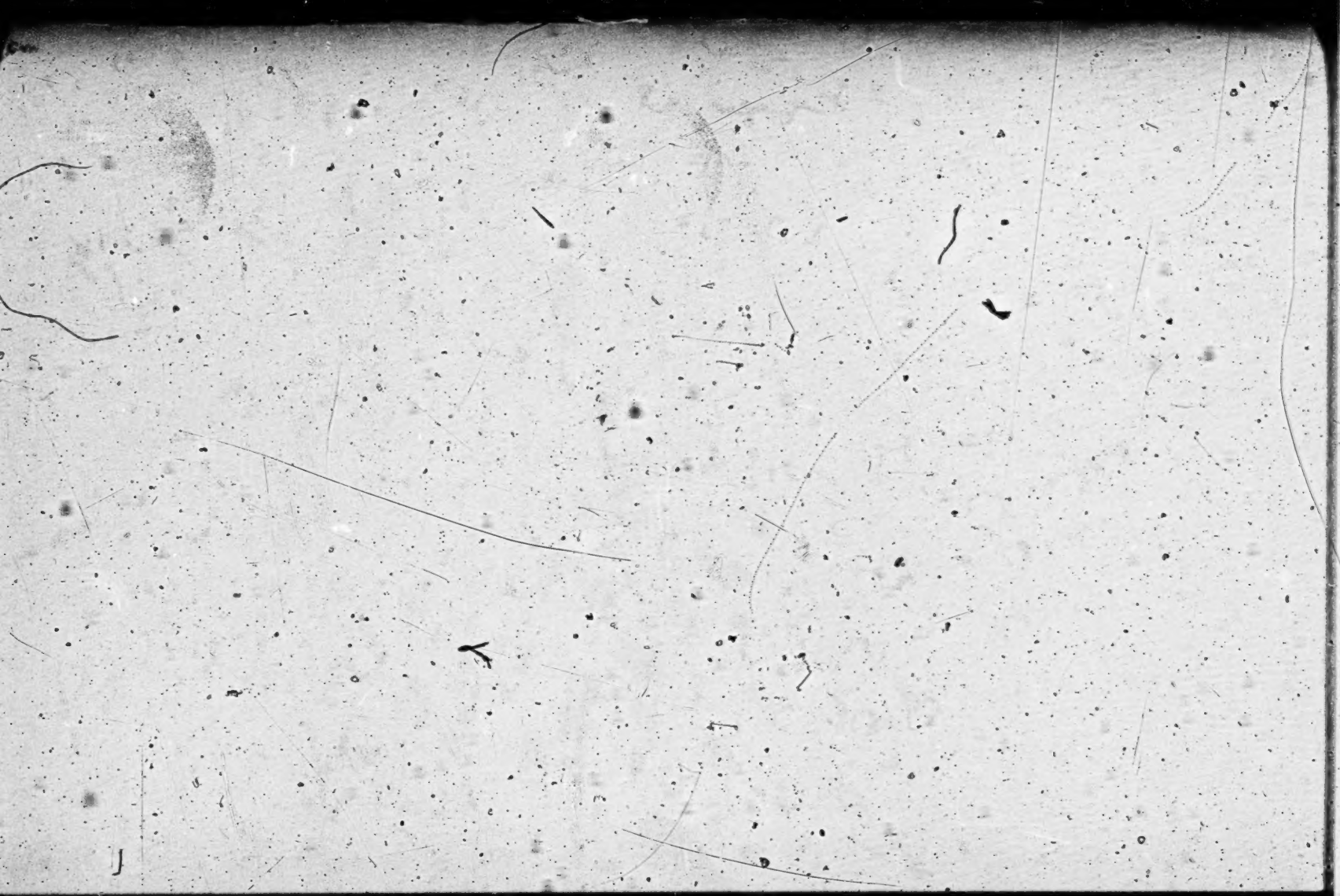

INDEX.

Statement of the case 1
Argument 4
Summary of the argument 4
A 4
B 12
C 17
Conclusion 18

Cases and Authorities Cited.

Carrington v. Pratt, 18 How., 63; 15 L. Ed., 267 ....5, 14
Chicago & N. W. Ry. Company v. Osborne, 146 U. S., 354; 13 Sup. Ct. Rep., 281 18
Deweese v. Reinhard, 165 U. S., 386, 390, 41 L. Ed., 757, 758 5
Forsyth v. Hammond, 166 U. S., 506; 17 Sup. Ct. Rep., 665 and cases there cited 17
Galloway v. Finley, 12 Peters, 264; 9 L. Ed., 1079 5
General Electric Co. v. Marvel Rare Metals Co., 77 L. Ed., 239 15
In Re Meyerfeld, 46 F. (2d), 665 10
Layne & Bowler v. Western Well Works, 261 U. S., 387; 67 L. Ed., 712 9

Leeds & Catlin v. Victor Talking Machine Co., 213 U. S., 301; 53 L. Ed., 805..... 14
Maatischappij v. Kosloff, 45 F. (2d), 94.....4, 8, 9, 11
Manhattan Medicine Co. v. Wood, 108 U. S., 218; 27 L. Ed., 706..... 5
Plamals v. The Pinar Del Rio, 227 U. S., 151; 72 L. Ed., 827, 48 Sup. Ct., 457..... 13
Pope Mfg. Co. v. Gormully, 144 U. S., 224; 36 L. Ed., 414, 419..... 14
Pope Mfg. Co. v. Gormully, 144 U. S., 238; 36 L. Ed., 420..... 15
Southern Power Company v. North Carolina Public Service Company, 263 U. S., 508; 44 Sup. Ct. Rep., 164..... 18
Walker on Patents, Sec. 468, 6th Ed..... 7
Wheeler v. Sage, 1 Wall., 518; 68 U. S., 518; 17 L. Ed., 646..... 5
Williams v. Levy, 54 F. (2d), 18.....4, 8, 10, 11

IN THE

Supreme Court of the United States

OCTOBER TERM, 1932.

KEYSTONE DRILLER COMPANY,
Petitioner,
vs.
GENERAL EXCAVATOR COMPANY,
Respondent.
} No. 908.

KEYSTONE DRILLER COMPANY,
Petitioner,
vs.
GENERAL EXCAVATOR COMPANY,
Respondent.
} No. 909.

KEYSTONE DRILLER COMPANY,
Petitioner,
vs.
THE OSGOOD COMPANY,
Respondent.
} No. 910.

KEYSTONE DRILLER COMPANY,
Petitioner,
vs.
THE OSGOOD COMPANY,
Respondent.
} No. 911.

RESPONDENTS' BRIEF OPPOSING PETITION FOR WRITS OF CERTIORARI.

STATEMENT OF THE CASE.

Prior to the filing of the instant suits, three of the patents involved here were in suit against the Byers Machine

Company in the United States District Court in Cleveland, Ohio. In that case, the bill of complaint alleged conjoint use by defendant of the inventions of the said patents. The three patents were held valid by the District Court (R. V. I, pp. 10-13) and by the Sixth Circuit Court of Appeals (44 F. (2d) 283).

After the decision of the District Court in the Byers case, the instant suits were filed. Both the bills of complaint and the supplemental bills of complaint in the instant suits alleged conjoint use by the respondents of the inventions of all the patents sued upon. They also alleged the prior adjudication obtained in the Byers case. Motions for preliminary injunctions on each of the patents adjudicated in the Byers case were made, with this prior adjudication being relied upon as the basis for the request for preliminary injunction. These preliminary injunctions were denied, but in lieu thereof, certain bonds were required.

Upon evidence presented by respondents, the District Court in the instant suits wrote an exhaustive Opinion analyzing the actions of the petitioner through its general manager, Downie, and held these actions highly reprehensible, a fraud upon the courts which might subsequently consider the matter, a fraud upon subsequently claimed defendant infringers and a fraud upon the public. The District Court, in these cases, however, held that, because the respondents discovered and forced the disclosure of the fraudulent acts, the doctrine of "unclean hands" should not be applied to bar the relief sought in these suits (R. V. II, pp. 1097-1100).

The Court of Appeals of the Sixth Circuit, upon a hearing of the appeals and cross appeals in the instant cases, agreed that the conduct had been "highly reprehensible" but held that petitioner could not be saved from the effect of its wrong-doing by the forced disclosure of the fraud after the filing of the suits; that its conduct constituted "unclean hands" and should be appraised as of the date of filing of the bills of complaint (R. V. V; pp. 121-124). The court therefore held that because of these facts petitioner should have been denied relief in a court of equity. The decrees of the District Court were reversed, and the causes remanded with instructions to dismiss the bills of complaint without prejudice to the prosecution of suits at law, or indeed, to subsequent actions in equity upon the other patents in suit.

A petition for rehearing was denied and in its memorandum denying the petition for rehearing, the Court of Appeals discussed the cases mainly relied upon here by this petitioner and ruled that they were not in point. The court also discussed petitioner's contention as to the new Equity Rules and pointed out that these Rules "are not intended to change the general nature and characteristics of a court of equity as a court of conscience in which the granting of relief is largely discretionary, and the court is not bound by hard and fast rules" (R. V. V, p. 158).

ARGUMENT.

Summary of the Argument:

A. The court below correctly decided the issues involved in these cases, and its decision is not in conflict with the decision of the Second Circuit Court of Appeals in Maatschappij v. Kosloff, 45 F. (2d), 94, or of the Ninth Circuit Court of Appeals in Williams v. Levy, 54 F. (2d), 18.

B. The decisions of the court below neither conflict with nor construe Equity Rule 26, since petitioner joined its patents under the conjoint rule doctrine and not under Equity Rule 26 and no question of Federal law is involved.

C. There is no question of great public importance involved in these cases.

A.

The doctrine of "unclean hands" was applied by the Court of Appeals in the instant cases on fundamental grounds. The court held that this petitioner took elaborate and successful steps to suppress information upon which the court was entitled to pass, that it obtained a favorable adjudication as a result of these steps and that it used the favorable adjudication in the instant cases in an effort to perpetuate the fraud previously perpetrated.

The court recognized that this petitioner had deliberately joined these patents in the instant cases. It applied the doctrine of "unclean hands" to these cases as a whole

just as did this court in Carrington v. Pratt, 18 How., 63; 15 L. Ed., 267, wherein the court refused relief on a bottomry bond in which fictitious items had been inserted in an attempt to defraud third persons. The fraud being discovered, plaintiff asked that relief be given to the extent of the proper items in the bond. This court, however, refused relief, saying at page 67:

> "By holding the security valid to the extent of the loan, rejecting the excess, the guilty party would risk nothing; for, when detected in the fraud, he would still be enabled to reimburse himself for the amount really due. We have seen that the rule of equity—and which is the rule of admiralty in such cases—refuses to interfere for relief, and leaves the parties where the law finds them."

This is in accord with the doctrine laid down by this court in the following cases: Deweese v. Reinhard, 165 U. S., 386, 390; 41 L. Ed., 757, 758; Manhattan Medicine Co. v. Wood, 108 U. S., 218; 27 L. Ed., 706; Galloway v. Finley, 12 Peters, 264; 9 L. Ed., 1079; Wheeler v. Sage, 1 Wall., 518; 68 U. S., 518; 17 L. Ed., 646.

The decision of the Court of Appeals in refusing relief to petitioner, and in dismissing the bills of complaint because of "unclean hands" is therefore seen to be in accord with the numerous decisions of this court refusing aid to wrong-doers seeking equitable relief whether parts of their claims are free from taint or not.

However, the Court of Appeals also realized that the allegation by the petitioner that the "unclean hands" in respect to one of the patents in suit had no relation to any of the other patents in suit is pure sophistry. This is not

a case wherein five different patents relating to independent subject matter were embodied in a single suit merely for convenience. The alleged inventions of these patents were claimed to be embodied in a single machine. Much stress was placed upon the alleged commercial success of this single machine and this alleged commercial success was relied upon to support claimed validity and breadth of all the patents involved.

In its bills of complaint, the petitioner appealed to the court on the theory that all the patents in suit were to be considered in such a way as to constitute one single cause of action by alleging conjoint use of all the patents to make a single structure. The following paragraph appears as paragraphs 17 in the bills of complaint against the respective respondents (R. V. I, pp. 8, 101):

> XVII. The inventions of the aforesaid patents are susceptible of conjoint embodiment and use in one and the same construction, and have been so conjointly embodied and used in the machines made and sold by defendant as aforesaid.

Similar paragraphs were also contained in the supplemental bills of complaint (R. V. I, pp. 48, 143).

It will thus be seen that the petitioner in these suits was not joining separate and independent patents wholly unrelated to each other, as may be done under the present Equity Rule 26, but that the petitioner was following the practice prior to the adoption of the Equity Rule 26 of joining in one suit a plurality of patents where the inventions covered by those patents embodied one infringing process, machine, manufacture, or composition of matter (Walker on Patents, Sec. 468, 6th Ed.).

The petitioner now seeks to shift its ground and allege that these patents were joined in one suit under the authority of Equity Rule 26, which was really promulgated to permit joinder of unrelated causes of action and did not modify the conjoint use doctrine.

The attempt of petitioner to make it appear that its wrong-doing was confined solely to one patent in suit, and that as to the other patents its conduct was unsullied will not bear analysis. While in the beginning before any suits were filed the petitioner's wrongful conduct was confined to obtaining unlawful agreements to suppress public use evidence as to Downie Patent 1,511,114, yet once suits were brought, the various steps taken by petitioner to make this suppression and concealment of evidence relating to Downie Patent 1,511,114 effective, contaminated the entire suit. The Downie Patent 1,511,114 as to which the wrongful acts began was the principal patent upon which the petitioner relied in the Byers case.

Thus, though the evidence suppressed had to do with the validity of Downie Patent No. 1,511,114, the claim of validity of all of the patents involved is based upon much testimony as to the utility and commercial success of the single machine alleged to embody the subject matter of the other patents in suit as well as of this Downie patent. The patents were presented as a group representing a single continuous development by petitioner.

Therefore, we are not dealing with unrelated patents merely joined in a single bill of complaint for convenience. We are dealing with patents alleged to be conjointly used. Moreover, petitioner so made its record in these cases that

the testimony as to utility and commercial success of the device of Downie Patent 1,511,114 is not separable from the testimony as to utility and commercial success of the devices of the other patents in suit. In other words, if the court below had felt disposed to pass upon the questions of invalidity and infringements of the other patents in suit, it would have been faced with the impossible task of separating the testimony relating to these other patents from that relating to that of Downie Patent 1,511,114. This situation was created by petitioner with full knowledge of its fraudulent acts and in a deliberate attempt to perpetuate the benefits which it had fraudulently obtained.

The court below on petition for rehearing (R. V. V, pp. 157, 158) considered and clearly distinguished the cases of Maatschappij v. Kosloff, 45 F. (2d), 94, and in re Meyerfeld, 46 F. (2d), 665, affirmed in Williams v. Levy, 54 F. (2d), 18.

The case of Maatschappij, etc. v. Kosloff, 45 F. (2d), 94, presented no such situation as is here involved. In that case, the plaintiff's suit was based on two distinct grounds. One ground was infringement of certain registered trade-marks. The other ground was unfair competition by simulation of wrappers for the articles being sold, particularly by imitating the selection of colors and arrangement of lettering.

"Unclean hands" was charged because of alleged false statements made in application for registration of the trade-mark. The court reached the conclusion that the statements alleged to be false were, in fact, true. Since this disposed of the question of "unclean hands," the fur-

ther statement that if "unclean hands" had been proved this would not bar relief on the ground of unfair competition, was merely obiter dictum.

But the fact that a Court of Appeals of one circuit makes a statement, by way of obiter dictum, which is contrary to a decision of a Circuit Court of Appeals of another circuit is no such conflict as will justify the issuance of a writ of certiorari. Where there is an absence of conflict between the decisions of the Circuit Courts of Appeals, the writ of certiorari will be denied. Layne & Bowler v. Western Well Works, 261 U. S., 387; 67 L. Ed., 712.

As a matter of fact, however, the statement by the court in that case was not contrary to the holding of the court below in the instant cases. The cause of action on the trade-mark registration in that case was entirely independent of the cause of action on unfair competition, the rights are of a different nature, and the court held that the alleged fraud as to the former did not affect the latter. But, in the present case, the rights sought to be protected are all patent rights alleged to be conjointly used and the urging of the fraudulently obtained adjudication and commingling of the testimony as to all patents made the suit an integral suit which was tainted throughout with fraud.

Therefore, in the instant cases, the wrong-doing having been directly connected with the patent rights sought to be enforced, the court below was perfectly right in dismissing the bills of complaint on the grounds of "unclean hands" and there is nothing in Maatschappij v. Kosloff which holds to the contrary. Nor is there any conflict between circuits.

The case of in re Meyerfeld, 46 F. (2d), 665, affirmed in Williams v. Levy, 54 F. (2d), 18, relied upon by petitioner, is even less pertinent. In this case, Levy had advanced all of the money for the purchase of a piece of property by Harry Meyerfeld. The undisputed evidence showed that, for reasons of business convenience, the legal title to the property was retained by Meyerfeld, though the equitable title was held by Levy. When Meyerfeld became bankrupt, Levy made claim to his property and offered a deed as further evidence of this title. The referee held that the deed was not genuine, though the court called attention to the fact that this holding was upon sharply conflicting evidence. The court merely rejected this evidence and held that it was unnecessary, in view of the fact that the undisputed evidence showed the establishment of a resulting trust. It said that the finding that the deed was not genuine could have the effect only of leaving the question open as to whether there was a charge to be ascertained in favor of the bankrupt for reasonable compensation for the use of his name with respect to this particular lot, and which charge might be determined to be a lien against it.

This was merely the rejection of a piece of evidence of doubtful validity, with the holding that the other evidence in the case clearly showed the establishment of a resulting trust. It is a far cry from that case to the present one wherein the petitioner, after obtaining a favorable adjudication of a group of patents by fraudulently depriving the court of free access to information regarding a prior public use against an important patent of that group deliberately

urges this fraudulently obtained adjudication in an attempt to take further advantage of the court already deceived. In the one case, as pointed out by the court below, the claimant did not undertake to initiate proceedings for his own relief in a court of equity but was brought into such court against his will and founded his claim upon two contentions as to one of which he fabricated evidence. As pointed out by the court below, "The relief which was sought on the alleged resulting trust theory in no sense could be said to be 'founded on the unlawful thing done or intended to be done.'" (R. V. V, pp. 157, 158). But in the present case, the relief sought was founded on fraudulently obtained adjudication and with deliberate knowledge and intent to defraud the court which had already been defrauded to obtain such adjudication.

It is clear that there is no conflict whatever between the decision of the court below and the decisions of the Second Circuit Court of Appeals in Maatschappij v. Kosloff, 45 F. (2d), 94, and of the Ninth Circuit Court of Appeals in Williams v. Levy, 54 F. (2d), 18. The Maatschappij case merely contains obiter dicta about the doctrine of "unclean hands". The Williams case merely rules that a forged piece of evidence cannot nullify a resulting trust clearly established to exist by undisputed evidence and not founded on the forged piece of evidence. Neither holding is in conflict with the holding by the court below that the petitioner, having deliberately defrauded the court in the Byers case by fraudulently obtaining a favorable adjudication, and by urging in the instant cases, such fraudulent adjudication, is barred from relief in equity because of "unclean hands".

B.

General Equity Rule 26 has no bearing on the present situation. The Rule was made for the purpose of permitting the joinder of causes of action in a single bill even where those causes of action are wholly independent, separate and distinct.

The court below did not construe Equity Rule 26. The court merely said (R. V. V, p. 158):

> "Such new equity rules are not intended to change the general nature and characteristics of a court of equity as a court of conscience in which the granting of relief is largely discretionary and the court is not bound by hard and fast rules. Cf. Pope Mfg. Co. v. Gormully, 144 U. S., 224, 236-7."

This is merely a succint statement of a fact, obvious to anyone, that the new Equity Rules were not intended to restrict the doctrine of "unclean hands". It certainly cannot be construed to be a holding that a plaintiff is not entitled to join several patents in one cause of action. In fact, the ruling by the court below holds that the plaintiff may join several patents in a single cause of action.

One point that petitioner omits to set forth is that it joined the patents in suit of its own volition and that it alleged and proved conjoint use. Petitioner also omits to make it clear that, of its own volition, it relied upon prior adjudication, fraudulently obtained, in the filing and prosecution of the present suits. A still further point that petitioner omits to state is that, of its own volition, it partially based its claim for relief on the allegation that the devices of the several patents involved had utility and

commercial success in a single machine and, in addition, that the machine alleged to infringe in each suit was a single machine alleged to embody all of the devices of all of the patents in that suit.

These facts were all before the court below, which could not fail to realize the interdependence of the patents sued upon and, more particularly, the impossibility of unscrambling the record which has resulted from these voluntary acts of petitioner.

It was obvious, in view of these plain facts, that the fraudulent acts of petitioner, though originally relating primarily to one patent, had been broadened by the urging of the fraudulent adjudication and had resulted in the building up of a record wherein the evidence relating to the one patent in question could not be separated from the evidence relating to the other patents in question.

As pointed out above, the petitioner now seeks to shift its position in an attempt to obtain consideration by this court. Having joined its patents by alleging conjoint use and having conducted these cases through the District Court and the Court of Appeals on the conjoint use theory, petitioner now seeks to convince this court that its patents were joined under the authority of Equity Rule 26 which was made to permit the joining of unrelated causes of action and not the joining of patents conjointly used. Petitioner may not thus shift its basis of claim in order to obtain consideration by this court on certiorari. Plamals v. The Pinar Del Rio, 227 U. S., 151; 72 L. Ed., 827, 48 Sup. Ct., 457. Merely advancing the specious misstatement that the Court of Appeals has erroneously construed

an Equity Rule which was, in fact, not involved in these suits does not justify any such procedure.

The case of Leeds & Catlin v. Victor Talking Machine Co., 213 U. S., 301; 53 L. Ed., 805, is not in point. It presents no such situation as the present one, wherein the petitioner has fraudulently obtained a favorable adjudication of a group of patents and attempted to perpetuate this fraud in a second suit by urging this fraudulently obtained favorable adjudication to constrain and limit the defenses available to the respondents.

Obviously, the expiration of a foreign patent showing the subject matter of one claim of a U. S. patent cannot affect the validity of another claim for entirely different subject matter not shown in the foreign patent. But where fraud enters into the situation, an entirely different case is presented. Thus, in Carrington v. Pratt, 18 How., 63, 15 L. Ed., 267, it was pointed out that a bottomry bond may be good and bad in parts where improper items were embraced within the bond from inadvertence or mistake and entirely consistent with the good faith of the parties in the transaction. However, it was further pointed out that entirely different principles control where the objectionable items are fictitious, and inserted in the bond with the intent to defraud third persons. In this case, this court refused relief on the ground of "unclean hands".

Petitioner refers to the case of Pope Mfg. Co. v, Gormully, 144 U. S., 224; 36 L. Ed., 414, 419, as authority for its statement that refusal of relief on the ground of "unclean hands" is no different from refusal of relief on the ground that the court has no jurisdiction. This case is no

authority for such a proposition. The case is, however, authority for the proposition that a plaintiff must come into equity with clean hands and that he will be denied relief in a court of equity if he has been guilty of unconscionable conduct.

Pope Mfg. Co. v. Gormully, et al., 144 U. S., 238; 36 L. Ed., 420, was primarily a suit for infringement of patents. The court said the separate ground for recovery based upon the alleged violation of a certain contract had been disposed of in a separate suit, concurrently decided, adverse to plaintiff, and would not be considered for that reason. The court then proceeded to an adjudication of the patents. This is in no sense parallel to the present situation wherein a public use as to one of the patents of a group was suppressed by positive steps of the petitioner, who then proceeded to obtain fraudulent decrees, for the purpose of oppressing competitors.

The case of General Electric Co. v. Marvel Rare Metals Co., 77 L. Ed., 239, is not in point here. This case merely held that a plaintiff suing a defendant in a district of which it is not an inhabitant or in which it has not committed acts of infringement is nevertheless subject to counterclaim because it has waived jurisdiction by the bringing of the suit in defendant's district. The case does state that Equity Rule 30 is without force as against conflicting statutory provisions. But this is a fact which is obvious without statement. It might be said, however, that as pointed out it is equally true that an Equity Rule is without force as against the established doctrine that a plaintiff must come into equity with clean hands. This is even

better expressed by the court below in the following language, at R. V. V, p. 158:

> "Such new equity rules are not intended to change the general nature and characteristics of a court of equity as a court of conscience in which the granting of relief is largely discretionary and the court is not bound by hard and fast rules. Cf. Pope Mfg. Co. v. Gormully, 144 U. S., 224, 236-7."

The contention advanced in Section *C* on page 16 of petitioner's brief is manifestly absurd. Certainly, the Court of Appeals has not suggested that, where several unrelated patents are joined in a bill of complaint under Equity Rule 26, the holding of one patent invalid, or not infringed, bars relief on the other patents. The court has not even taken this position as to suits wherein several patents are joined under the conjoint use doctrine.

The court below has merely realized that each of these suits is an integral suit; that the fraud, originating as to one patent, has spread to the entire suit through the voluntary acts of petitioner in urging fraudulently obtained adjudications and commingling its proofs as to all patents; and that the whole matter is so tainted with fraud that the petitioner is not entitled to relief in equity in these suits. A holding that these suits are tainted throughout with fraud is certainly not a nullification of Equity Rule 26 in any degree.

Petitioner throughout its brief refers to the maxim of "unclean hands" as solely a defense available to the respondents or urged by them. It is more than a defense. It is used by the courts of equity, frequently on their own mo-

tion, to protect themselves against being used as an instrument for the perpetuation of a fraud or of benefits gained through fraud.

Petitioner argues on page 16 of its brief that the inescapable conclusion from the ruling of the Circuit Court of Appeals is that petitioner should have filed a separate bill of complaint on each of the patents in suit, so as to avoid any possibility that a defense as to one of the patents only would defeat recovery on the other patents, and that this would multiply litigation and increase the burden of litigation to the courts and to the parties. In the Byers case and in the instant cases, petitioner relied upon the conjoint use of the several patents, each to strengthen the other. Since it relied upon the first Downie patent and the alleged commercial success and utility of the device of this patent to strengthen the other patents in the suit, to claim a unit value for the group, the group and their joint strength are necessarily affected by the fraud perpetrated in connection with that patent. Petitioner, having made its bed, must lie in it, and cannot now complain.

C.

No such grave matters are involved in these cases as to justify a review by this court.

The power to grant the writ asked for is to be exercised only in cases of great public importance (Forsyth v. Hammond, 166 U. S., 506, 17 Sup. Ct. Rep., 665, and cases there cited).

It is not to be exercised in cases involving only private rights or matters of fact pertinent only to the particular

action (Chicago & N. W. Ry. Company v. Osborne, 146 U. S., 354, 13 Sup. Ct. Rep., 281; Southern Power Company v. North Carolina Public Service Company, 263 U. S., 508, 44 Sup. Ct. Rep., 164).

CONCLUSION.

It is, therefore, respectfully submitted that this case is not one calling for the exercise by this court of its supervisory powers, and this petition should be denied.

Respectfully submitted,

EDWIN P. CORBETT,

LLOYD T. WILLIAMS,

EDWARD L. REED,

JOHN J. MAHONEY,

Counsel for Respondents.

INDEX.

Subject Index.

Statement of facts 1

Argument 7

Summary of argument 7

I. Whether unclean hands applied to one patent or all patents in each suit, the dismissal of the entire suits was proper 9

Cases relied upon by petitioner to sustain point of law raised in petition for certiorari 15

II. Petitioner's claim that its "unclean hands" affected only part of its suit is untenable 20

Error assigned by writ is a misconception of holding by the Court of Appeals 22

III. Equity Rule 26 not involved in these cases 24

Petitioner's pleadings and proofs considered all patents as one development, under conjoint use doctrine 26

The evidence as to all patents was commingled in instant cases and in Byers case 29

Petitioner asks consideration of testimony from another suit in which respondents had no part 33

The opinion of Judge Jones on the rehearing of the Byers case has no place in this record.... 36
The petition raises questions not included in errors assigned..... 38
Cases relied upon by petitioner..... 40
Errors in main brief for petitioner..... 43
Conclusion 50
Appendix—
The facts upon which Court of Appeals ruled "unclean hands" existed..... 52
The affidavit signed by Clutter..... 65
Agreement between Burn R. Clutter and the Keystone Driller Company..... 67
Downie knew, at the time he made this agreement with Clutter, that Clutter had nothing to sell but his silence..... 70
Agreement, Defendants' Exhibit 98, remained in force several years..... 75
Repossession of machine and substitution of cash for credit consideration of agreement, Defendants' Exhibit 98..... 75
Downie continued attempt to placate Clutter after repossession of machine..... 77
Petitioner went into the Toledo court against these respondents with the fraudulently obtained adjudication..... 81
Urging of the fraudulently obtained Byers adjudication in these suits was unclean hands.. 82
Effect of suppression of evidence not exhausted with decision in the Byers case..... 83

Index of Patents.

Clutter No. 1,317,431 56
Downie No. 1,511,114 ..... 2, 3, 4, 21, 31, 39
Downie No. 1,543,250 ..... 2, 3, 5
Downie No. 1,709,466 ..... 2, 5
Downie No. 1,716,432 ..... 2, 5
Wagner No. 1,476,121 3

Index of Patents in Appendix.

Downie No. 1,511,114 54
Clutter No. 1,347,431 56

Cases and Authorities Cited.

Alice State Bank, et al. v. Houston Pasture Company, 247 U. S., 240; 62 L. Ed., 1096 39
Baker v. Schofield, 243 U. S., 114; 61 L. Ed., 626 40
Barnes v. Barnes, 282 Illinois, p. 593 ..... 17, 19
Bein v. Heath, 6 How., 228; 12 L. Ed., 416 10
Bell & Howell Co v. Bliss, et al. (C. C. A. 7), 262 F. R., 131 12
Blair v. Oesterlein Machine Company, 275 U. S., 220, 72 L. Ed., 249 39
Bodkin v. Edwards, 255 U. S., 221; 65 L. Ed., 595 .. 40
Byers Case, 44 F. (2d), 283 ..... 4, 30
California Fig v. Stearn, 73 F. R., 812 (C. C. A. 6th) (approved by the Supreme Court in Worden v. California Fig Co., 187 U. S., 516) 11
Carmen v. Fox Film Corp., 269 F. R., 928 (C. C. A. 2) 12
Carrington v. Pratt, 18 How., 63; 15 L. Ed., 267 ..... 13, 21, 26

Causey v. United States, 240 U. S., 399; 60 L. Ed., 711 40
Cleveland Cliffs Iron Co. v. Arctic Iron Co., 261 F. R., 15 (C. C. A. 6th) 12
Cole v. Ralph, 252 U. S., 286; 64 L. Ed., 567 41
Commercial Credit Company v. United States of America, 276 U. S., 226; 72 L. Ed., 541 39
21 Corpus Juris, Sec. 173, p. 188 19
Creath's Administrator v. Sims, 5 How., 192, at page 204; 12 L. Ed., 111, at page 117 10
Crocker v. Ingersoll Engineering & Construction Co., 249 F. R., 31 (C. C. A. 6th) 12
Delk v. St. Louis & San Francisco Railroad, 220 U. S., 580; 55 L. Ed., 590 40
Deslions v. La Compagnie Generale Transatlantique, 210 U. S., 95; 52 L. Ed., 973 40
Deweese v. Reinhard, 165 U. S., 386, 390, 17 S. Ct., 340, 341; 41 L. Ed., 757 10
Donnelley v. United States of America, 276 U. S., 505; 72 L. Ed., 676 39
Federal Trade Commission v. Pacific States Paper Trade Association, et al., 273 U. S., 52; 71 L. Ed., 534 39
Gaines & Co. v. Turner Looker Co., 204 F. R., 928 (C. C. A. 6th) 12
Galloway v. Finley, et al., 12 Peters, 264, at page 296; 9 L. Ed., 1079, at page 1092 10
Gamewell Fire-Alarm v. City of Chillicothe, 7 F. R., 351, decided in 1881 27
Geddes v. Anaconda Copper Mining Co., et al., 254 U. S., 590; 65 L. Ed., 425 40

Geneva Furniture Mfg. Co. v. Karpen, et al., 238 U. S., 254; 59 L. Ed., 1295 25
Gerosa v. Apco Mfg. Co. (C. C. A. 1st), 299 F. R., 19 12
Harris v. Harris, 208 Ala., 20, 93 So., 841 19
Hubbard v. Tod, 171 U. S., 474, 43 L. Ed., 246, 19 Sup. Ct., 114 39
International Navigation Company v. Farr & Bailey Manufacturing Company, 181 U. S., 218; 45 L. Ed., 830 40
Kansas City v. Devol, 81 F. R., 726 25
Kitchen v. Rayburn, 86 U. S., 254, at page 263; 22 L. Ed., 64, at page 67 11
L. E. Waterman Company v. Modern Pen Company, 235 U. S., 88; 59 L. Ed., 142 40
Leeds and Catlin v. Victor Talking Machine Co., 213 U. S., 301, 53 L. Ed., 805 25
Luckenbach v. McCahan Sugar Refining Company, 248 U. S., 139; 63 L. Ed., 170 40
Lutcher v. Knight, 217 U. S., 257; 54 L. Ed., 757 41
Manhattan Medicine Co. v. Wood, 108 U. S., 218; 27 L. Ed., 706 11
Maatschappij v. Kosloff, 45 F. (2d), 94 15
Mason v. United States, 260 U. S., 545; 67 L. Ed., 396 40
Memphis Keeley Institute v. Leslie E. Keeley Co., 155 F. R., 964 (C. C. A. 6th) 11
Michigan Pipe v. Fremont Ditch, 111 F. R., 284 (C. C. A. 8th) 12
Munn v. The Americana Co., 83 N. J. Eq., 309; 91 Atl., 87 18

New York Dock Co. v. Steamship Poznan, 274 U. S., 117; 71 L. Ed., 955 40
Norton v. Larney, 266 U. S., 511; 69 L. Ed., 413 40
Oceanic Steam Navigation Co. (Ltd.) v. Aitken, et al., 196 U. S., 589; 49 L. Ed., 610 40
Olmstead v. United States, 277 U. S., 438; 72 L. Ed., 944 42
Panama Railroad Company v. Napier Shipping Co., 166 U. S., 280; 41 L. Ed., 1004 41
Piedmont & George's Creek Coal Co. v. Seaboard Fisheries Co., 254 U. S., 1; 65 L. Ed., 97 40
Pope v. Gormully, 144 U. S., 224, 236, 237; 36 L. Ed., 414 11
Primeau v. Granfield, 193 F. R., 91 (C. C. A. 2) 12
Re Meyerfeld, 46 F. (2d), 665, affirmed in Williams v. Levy, 54 F. (2d), 18 .....15, 16
Reese v. Philadelphia & Reading Railway Company, 239 U. S., 463, 60 L. Ed., 384 40
Road Improvement District No. 1 v. Missouri P. R. Co., 274 U. S., 188; 71 L. Ed., 992 40
Sly v. Central Iron, 201 F. R., 983 25
Southern Power Company v. North Carolina Public Service Company, 263 U. S., 508; 68 L. Ed., 413. 23
Southern Pacific Company v. Bogert, 250 U. S., 483; 63 L. Ed., 1009 40
Steele v. Drummond, 275 U. S., 199, 72 L. Ed., 238.. 39
Stone & McCarrick Inc. v. Dugan Piano Co., et al. (C. C. A. 5) 12
Toledo Computing Scale Co. v. Computing Scale Co., 142 F. R., 919 (C. C. A. 6th) 12

Union Central Life Ins. Co. v. Drake, 214 F. R., 536 (C. C. A. 8) 12
United States v. Chemical Foundation, 272 U. S., 1, 71 L. Ed., 131 40
United States v. Elliott, 3 F. (2d), 496 43
U. S. Supreme Court Rule 27, Par. 4 39
Varner v. New Hampshire Savings Bank, 240 U. S., 617; 60 L. Ed., 828 40
Walker on Patents, Sec. 468, 6th Ed. 27
Warner v. Independent Pier Company, 278 U. S., 85; 73 L. Ed., 195 39
Washington Securities Company v. United States, 234 U. S., 76; 58 L. Ed., 1220 40
Webster Electric Company v. Splitdorf Electrical Company, 264 U. S., 463, 68 L. Ed., 792 39
Weegham v. Killifer, 215 F. R., 168, at page 171 11

Cases and Authorities Cited in Appendix.

National Casket Co. v. Stolts, 157 Fed. Rep., 392, 393-394 (C. C. A. 2d) 57
Sipp Elec. & Machine Co. v. Atwood-Morrison Co., 142 Fed. Rep., 149, 153, 154 (C. C. A. 3d) 57
Weegham v. Killifer, 215 F. R., 168, at page 173 82
Wheeler v. Sage, 1 Wall, 518, 68 U. S., 518; 17 L. Ed., 646 11

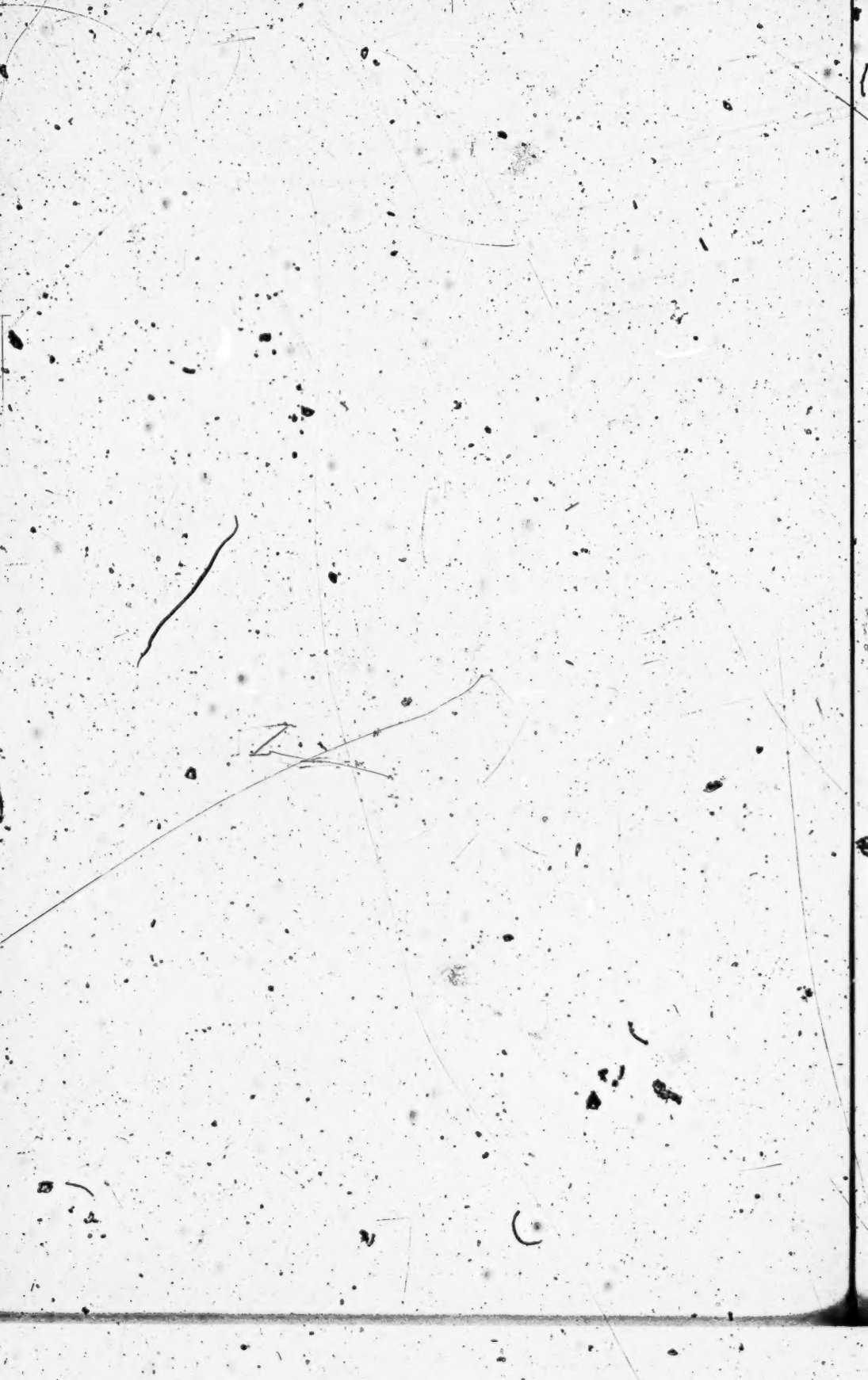

IN THE

Supreme Court of the United States

OCTOBER TERM, 1933.

Keystone Driller Company, Petitioner,
vs.
General Excavator Company, Respondent. } No. 34.

Keystone Driller Company, Petitioner,
vs.
General Excavator Company, Respondent. } No. 35.

Keystone Driller Company, Petitioner,
vs.
The Osgood Company, Respondent. } No. 36.

Keystone Driller Company, Petitioner,
vs.
The Osgood Company, Respondent. } No. 37.

BRIEF FOR RESPONDENTS.

STATEMENT OF FACTS.

The Petitioner, Keystone Driller Company, a corporation of Pennsylvania, located at Beaver Falls, Pennsyl-

vania, filed the present suits on February 9, 1929, in the Northern District of Ohio, Western Division at Toledo, Ohio. The suits were filed against The General Excavator Company, and The Osgood Company, both corporations of Ohio, located at Marion, Ohio.

The suits as originally filed alleged infringement by the Respondents of the following patents:

LeRoy P. Clutter Patent, No. 1,317,431, issued Sept. 30, 1919;

Robert Rex Downie Patent, No. 1,511,114, issued Oct. 7, 1924;

Robert Rex Downie Patent, No. 1,543,250, issued June 23, 1925;

Six months later, by supplemental bill of complaint filed against each of the Respondents, the following additional patents were also claimed to be infringed by Respondents: (R. V. I., pp. 44 and 139)

Robert Rex Downie Patent, No. 1,709,466, issued Apr. 16, 1929;

Robert Rex Downie Patent, No. 1,716,432, issued June 11, 1929.

The patents relate generally to excavating machinery of the power shovel type, or parts thereof.

Prior to the institution of these suits the Petitioner had filed a suit on December 22, 1926, against The Byers Machine Company and Byers Machine Company in the Northern District of Ohio, Eastern Division, at Cleveland, Ohio. That suit involved three of the patents which are involved in these present suits. The patents

Note: Emphasis throughout ours unless otherwise indicated.

involved here which were also in the Byers' suit are as follows:

LeRoy P. Clutter Patent, No. 1,317,431, issued Sept. 30, 1919;

The Downie Patent, No. 1,511,114, issued Oct. 7, 1924; and

Downie Patent, No. 1,543,250, issued June 23, 1925.

The Cleveland suit also involved a patent to Wagner, No. 1,476,121, issued December 4, 1922, which is not involved in these present suits.

The Cleveland case against The Byers Machine Company was tried and submitted to Judge Westenhaven in September, 1927. Judge Westenhaven died, however, before any decision was made by him in that case. By stipulation the case was submitted without retrial to Judge Paul Jones, who rendered an Opinion which was filed on January 23, 1929, holding the patents valid and infringed as to the claims relied upon in that suit.

After the District Court rendered its Opinion in the Cleveland case against The Byers Machine Company, the Petitioner herein, on Feb. 9, 1929, filed these present suits against Respondents, and at the same time filed a motion for preliminary injunction against each of the Respondents. The motion for preliminary injunction relied upon the decision of the District Court in the Cleveland case as an "adjudication" of the patents sued upon in these present suits.

The motions for preliminary injunction were pressed against these Respondents, but the District Judge at Toledo, upon a showing of new evidence in these cases,

refused to grant a preliminary injunction. However, the District Judge made his refusal of the preliminary injunction conditional upon the requirement that these Respondents furnish bonds to protect the Petitioner against any damages or profits which might be found in case it should be determined at the final hearing that the Petitioner was entitled to injunctions. Bonds were furnished by the Respondents so that preliminary injunctions were never issued.

In the meantime, however, while these suits were pending and before trial herein, the Circuit Court of Appeals handed down a decision affirming the decree of the District Court in the Byers' suit at Cleveland, Ohio (44 F. [2nd] 283.) The affirmance of the decision of the District Court in the Cleveland suit against Byers Machine Company greatly increased the burden of the Respondents in the present suits, in showing invalidity and non-infringement of the patents sued upon.

These present cases were consolidated by stipulation for the purposes of trial. Trial commenced on March 3, 1931, and was concluded on May 12, 1931.

On June 22, 1931, the District Court filed a "Memorandum Opinion." The Opinion of the Court clearly indicated that while it found Clutter Patent, No. 1,317,431, and Downie Patent, No. 1,511,114, to be valid and infringed, this holding was made purely out of deference to the prior Opinion of the Circuit Court of Appeals and did not go into the merits of the new defenses and new evidence which had been offered by these Respondents, except the defense of "unclean hands." The District

Court passed all questions raised by this new evidence up to the Circuit Court of Appeals for its decision, presumably because of the fact that the Circuit Court of Appeals had previously held these two patents to be valid in its decision in the Byers' suit (44 F. [2nd] 283). The District Court, however, found that Downie Patent, No. 1,543,250, was not infringed by these Respondents; and also held that Downie Patent, No. 1,709,466 was invalid. Downie Patent, No. 1,716,432, was held to be infringed by The General Excavator Company. The charge of infringement based on this patent had been withdrawn against The Osgood Company prior to the trial.

As one of their defenses to these suits, the Respondents introduced evidence to show that the Petitioner came into equity with "unclean hands", and that the suits should therefore be dismissed.

The District Court wrote an exhaustive Opinion analyzing this evidence as to the "unclean hands" of the Petitioner, and held these actions "highly reprehensible," a fraud upon the courts which might subsequently consider the matter, a fraud upon subsequently claimed defendant infringers and a fraud upon the public.

The District Court, in these cases, however, held that, because the Respondents discovered and forced the disclosure of the fraudulent acts, the doctrine of "unclean hands" should not be applied to bar the relief sought in these suits (R. V. II, pp. 1097-1100).

The Court of Appeals of the Sixth Circuit, upon a

hearing of the appeals and cross appeals in the instant cases, agreed with the District Court that the conduct of Petitioner had been "highly reprehensible" but held that Petitioner could not be saved from the effect of its wrong-doing by the forced disclosure of the fraud after the filing of the suits; that its conduct constituted "unclean hands" and should be appraised as of the date of filing of the bills of complaint (R. V. V., pp. 121-124). The Court therefore held that because of these facts Petitioner should have been denied relief in a court of equity. The decrees of the District Court were reversed, and the causes remanded with instructions to dismiss the bills of complaint without prejudice to the prosecution of suits at law, or indeed, to subsequent actions in equity upon the other patents in suit.

A petition for rehearing was denied and in its memorandum denying the petition for rehearing, the Court of Appeals discussed the cases mainly relied upon here by this Petitioner and ruled that they were not in point. The Court also discussed Petitioner's contention as to the new Equity Rules and pointed out that these Rules "are not intended to change the general nature and characteristics of a court of equity as a court of conscience in which the granting of relief is largely discretionary and the court is not bound by hard and fast rules" (R. V. V., P. 158).

A petition for certiorari was made to this Court on certain specific questions and was granted. These hearings are now here upon the questions raised by the petition for certiorari.

ARGUMENT.

Summary of Argument:

The Petitioner bases its claim to relief in this Court on certain erroneous allegations. They may be listed as follows:

I. Petitioner alleges that, when a plaintiff enters a court of equity with "unclean hands," the court must segregate any parts of the suit not directly affected by the inequitable conduct and grant relief thereon.

II. Petitioner alleges that the Court of Appeals found that plaintiff had come into court with "unclean hands" in regard to one only of the patents involved in each suit (Petition for Writ, p. 2).

III. Petitioner alleges that each of these suits is a plurality of independent suits which have been combined under Equity Rule 26 merely for the convenience of the courts and the parties.

As to the first allegation, the rule is well settled, by the overwhelming weight of authority, that a court of equity will never be diligent to protect the rights of a plaintiff who enters court with "unclean hands" and that it will never segregate portions of the suit but will dismiss the entire suit, leaving the plaintiff where it finds him.

As to the second allegation, the Court of Appeals did not find that Petitioner had come into Court with "unclean hands" as to one only of the patents involved in

each suit. On the contrary, it found that Petitioner had come into Court with "unclean hands" as to all of the patents in each suit. Thus, in its Memorandum on Order Denying Petition for Rehearing, it held that the entire suits were dismissed because of the advantage Petitioner sought to take of a decree of validity obtained by fraud. This is a clear holding that all of the patents joined in these suits were sullied by the action of Petitioner in urging the adjudication fraudulently obtained.

As to the third allegation, these suits were not filed under Equity Rule 26 which was adopted for the purpose of permitting the filing of independent causes of action. They were filed under the conjoint use rule which was effective long before Equity Rule 26 was provided and which permitted the joinder of a plurality of patents in one suit without multifariousness, providing the alleged inventions of these patents were alleged to be conjointly used by defendants in a single machine. Thus, these suits became one cause of action wherein the evidence was commingled, so that independent adjudication of the patents on the record made, was not feasible.

I.

WHETHER UNCLEAN HANDS APPLIED TO ONE PATENT OR ALL PATENTS IN EACH SUIT, THE DISMISSAL OF THE ENTIRE SUITS WAS PROPER.

The maxim that "He who comes into equity must come with clean hands" is of ancient origin and is probably as old as the equity courts themselves.

This maxim has been universally applied by courts of equity, in England and the United States, for centuries, without modification or exception.

The Petitioner in these cases attempts to modify this ancient maxim by attempting to have grafted thereon an exception, which would provide that where suit is brought in equity and it is found that the party seeking relief has been guilty of "unclean hands" in regard to the matter in litigation, but that some portion of the rights to be enforced therein as Petitioner says, remains "unsullied," then the wrong-doer should have relief for that portion of his suit which he claims to be unaffected by his fraud or unconscionable conduct.

This unique and dangerous principle has never been subscribed to by the courts of equity. It is not the law and Petitioner has failed to cite or call attention to any case wherein courts of equity have ever applied so dangerous a principle or wherein a court of equity has ever been so solicitous for the rights of wrong-doers that

it would become, by the application of such a rule, an abettor of the fraud attempted to be perpetrated. As a matter of fact just the opposite is the law, as was clearly stated by this Court in Deweese v. Reinhard, 165 U. S. 386, 390, 17 S. Ct. 340, 341; 41 L. Ed. 757, as follows:

> "A court of equity acts only when and as conscience commands, and if the conduct of the plaintiff be offensive to the dictates of natural justice, then, **whatever may be the rights he possesses and whatever use he may make of them in a court of law, he will be held remediless in a court of equity.**"

Again, in Bein v. Heath, 6 How., 228; 12 L. Ed. 416, this Court held as follows:

> "It is a principle in chancery, that he who asks relief must have acted in good faith. **The equitable powers of this court can never be exerted in behalf of one who has acted fraudulently,** or who by deceit or any unfair means has gained an advantage. **To aid a party in such a case would make this court the abettor of iniquity.**"

In the case of Creath's Administrator v. Sims, 5 How., 192, at page 204; 12 L. Ed., 111, at page 117, this Court answered a wrong-doer's plea for relief by stating:

> "you cannot be admitted here to plead your own demerits; precisely, **therefore, in the position in which you have placed yourself, in that position must we leave you.**"

In Galloway v. Finley et al, 12 Peters 264, at page 296; 9 L. Ed., 1079, at page 1092, this Court after having denied a wrong-doer equitable relief as to title to lands, also

denied him relief for money expended in the transaction, stating:

> "Then as to the loss of the warrants and fees; it having been the clear duty of the appellant to enter the lands for the benefit of his vendors, and only to have demanded compensation for expense and trouble, and he having entered for himself, a court of equity must decline to assist him (in the language of Mr. Justice Story, 2 Story's Eq. 8) to escape from the toils which he has studiously prepared to entangle others; it must be left to him to get rid of his entries, and secure the benefit of his warrants."

The principle of law enunciated in the above-quoted cases has been uniformly followed by this Court in the following cases:

Manhattan Medicine Co. v. Wood, 108 U. S. 218; 27 L. Ed., 706.
Wheeler v. Sage, 1 Wall, 518; 68 U. S., 518; 17 L. Ed., 646.
Kitchen v. Rayburn, 86 U. S. 254, at page 263; 22 L. Ed., 64, at page 67.
Pope v. Gormully, 144 U. S., 224, 236, 237; 36 L. Ed., 414.

Some of the other leading cases in the Federal Courts in which the doctrine of "unclean hands" has been applied are as follows:

Weegham v. Killifer, 215 F. R. 168, at page 171 (affirmed by the Circuit Court of Appeals of the 6th Circuit in 215 F. R. 289).
California Fig v. Stearn, 73 F. R., 812 (C. C. A. 6th) (approved by the Supreme Court in Worden v. California Fig Co., 187 U. S. 516).
Memphis Keeley Institute v. Leslie E. Keeley Co., 155 F. R., 964 (C. C. A. 6th).

Toledo Computing Scale Co. v. Computing Scale Co., 142 F. R., 919 (C. C. A. 6th).
Gaines & Co. v. Turner Looker Co., 204 F. R., 553 (C. C. A. 6th).
Carmen v. Fox Film Corp., 269 F. R., 928 (C. C. A. 2).
Primeau v. Granfield, 193 F. R., 911 (C. C. A. 2).
Crocker v. Ingersoll Engineering & Construction Co., 249 F. R., 31 (C. C. A. 6th).
Cleveland Cliffs Iron Co. v. Arctic Iron Co., 261 F. R., 15 (C. C. A. 6th).
Michigan Pipe v. Fremont Ditch, 111 F. R., 284 (C. C. A. 8th).
Union Central Life Ins. Co. v. Drake, 214 F. R., 536 (C. C. A., 8).
Gerosa v. Apco Mfg. Co. (C. C. A. 1st Circ.), 299 F. R., 19.
Stone & McCarrick, Inc. v. Dugan Piano Co., et al. (C. C. A. 5th Circ.), 220 F. R., 837.
Bell & Howell Co. v. Bliss, et al. (C. C. A. 7th Circ.), 262 F. R., 131.

It is plain from the citation of the above authorities that Federal Courts of equity will refuse to grant any relief to those seeking its aid who themselves have been guilty of illegal, deceitful, fraudulent, unfair or unconscionable acts with reference to the matter in which they seek the aid of the court. This principle of law is so well established that it is believed unnecessary to cite the numerous cases which may be found in the State reports applying this maxim.

The said point of law raised by the petition for certiorari, was before the Circuit Court of Appeals on Petitioner's petition for rehearing herein. The Court of

Appeals denied the petition for rehearing, stating as to this point as follows:

> "The doctrine which we have applied is simply that if one, as actor, seeks to set the judicial machinery in a court of equity in motion upon grounds in respect to which his conduct is sullied, he will find the doors of the court closed against him. **The bar is said to be 'in limine.'** The plaintiff is repelled as of the date of the filing of the bill and in respect of the maintenance of the action then instituted, because he does not then appeal to the court as one in whose behalf the largely discretionary powers of the court should be exercised. **The fact that delay is thereby occasioned, or that the plaintiff has thereby suffered a loss of time and expense, is immaterial.**"

However, it is believed that the precise question raised by the petition for certiorari, as to whether or not a court, even where it finds "unclean hands" in an equity suit, should give the wrong-doer relief as to that part of the suit which is claimed to be "unsullied," was decided and conclusively settled by the decision of this Court in the case of Carrington v. Pratt, 18 How., 63; 15 L. Ed., 267. In that case the Court refused relief on a bottomry bond in which fictitious items had been inserted in an attempt to defraud third persons. The fraud being discovered, plaintiff asked that relief be given to the extent of the proper items in the bond. The Court however refused relief, saying at page 67:

> "It is insisted, however, that the security should be held valid for the amount actually advanced, conceding it to be void for the excess. It is true that a bottomry bond may be good in part and bad in part, and may be upheld even in cases when taken for a sum in the aggregate larger than that which prop-

erly constitutes a lien upon the vessel within this species of security. There are many cases to this effect. Abbott, 126, n.; 1 Wheat, 107; 8 Pet., 228. These are cases, however, in which the items rejected were not properly chargeable on the ship, or were embraced within the bond from inadvertence or mistake, and entirely consistent with the good faith of the parties in the transaction. **They stand upon widely different principles from those where the objectionable items are fictitious, and inserted in the bond with the intent to defraud third persons. The entire security in such cases becomes tainted with the fraud, and a particeps criminis is not allowed to come into court to enforce it, even for the money advanced or expended; for to permit it would afford countenance to the fraud by giving partial effect to it.**

"By holding the security valid to the extent of the loan, rejecting the excess, the guilty party would risk nothing; for, when detected in the fraud, he would still be enabled to reimburse himself for the amount really due. **We have seen that the rule of equity—and which is the rule of admiralty in such cases—refuses to interfere for relief, and leaves the parties where the law finds them.**"

It is therefore submitted that the Circuit Court of Appeals correctly decided the issues involved in these cases by dismissing the bills of complaints when it had found that the Petitioner was guilty of "unclean hands." The law is well settled, as shown by the above cases, that the equitable powers of a court of equity can never be exerted in behalf of one who has acted fraudulently, and whatever may be the rights he possesses, and whatever use he may make of them in a court of law, he will be held remediless in a court of equity. **When fraud or**

illegality is disclosed in a case the entire suit becomes tainted with fraud and public policy requires that an equity court refuse its aid irrespective of the state of the pleadings and regardless of the fact that with fraud and illegality absent the plaintiff might appear entitled to relief. Under such circumstances the wrong-doer will find the doors of the court closed against him, whether parts of its claims are free from taint or not.

Cases Relied Upon By Petitioner to Sustain Point of Law Raised in Petition for Certiorari.

The Petitioner in its Main Brief fails to cite any cases which sustain the proposition raised by its petition for certiorari. The court below on petition for rehearing (R. V. V. pp. 157, 158) considered and clearly distinguished the cases of Maatschappij v. Kosloff, 45 F. (2d), 94, and in re Meyerfeld, 46 F. (2d), 665, affirmed in Williams v. Levy, 54 F. (2d), 18.

The case of Maatschappij v. Kosloff, 45 F. (2d), 94, presented no such situation as is here involved. In that case, the plaintiff's suit was based on two distinct grounds. One ground was infringement of certain registered trade-marks. The other ground was unfair competition by simulation of wrappers for the articles being sold, particularly by imitating the selection of colors and arrangement of lettering.

"Unclean hands" was charged because of alleged false statements made in application for registration of the trade-mark. The court reached the conclusion that the statements alleged to be false were, in fact, true. Since

this disposed of the question of "unclean hands", the statement that if "unclean hands" had been proved that would not bar relief on the ground of unfair competition, was merely obiter dictum.

The case of in re Meyerfeld, 46 F. (2d), 665, affirmed in Williams v. Levy, 54 F. (2d), 18, relied upon by Petitioner, is even less pertinent. In this case Levy had advanced all the money for the purchase of a piece of property by Harry Meyerfeld. The undisputed evidence showed that, for reasons of business convenience, the legal title to the property was retained by Meyerfeld, though the equitable title was held by Levy. When Meyerfeld became bankrupt, Levy made claim to his property and offered a deed as further evidence of this title. The referee held that the deed was not genuine, though the court called attention to the fact that this holding was upon sharply conflicting evidence. The court merely rejected this evidence and held that it was unnecessary, in view of the fact that the undisputed evidence showed the establishment of a resulting trust. It said that the finding that the deed was not genuine could have the effect only of leaving the question open as to whether there was a charge to be ascertained in favor of the bankrupt for reasonable compensation for the use of his name with respect to this particular lot, and which charge might be determined to be a lien against it.

This was merely the rejection of a piece of evidence of doubtful validity, with the holding that the other evidence in the case clearly showed the establishment of a resulting trust. It is a far cry from that case to the

present one wherein the Petitioner, after obtaining a favorable adjudication of a group of patents by fraudulently depriving the court of free access to information regarding a prior public use against an important patent of the group deliberately urges this fraudulently obtained adjudication in an attempt to take further advantage of the court already deceived.

In the one case, as pointed out by the court below, the claimant did not undertake to initiate proceedings for his own relief in a court of equity but was brought into such court against his will and founded his claim upon two contentions, as to one of which he is alleged to have fabricated evidence. As pointed out by the court below, "The relief which was sought on the alleged resulting trust theory in no sense could be said to be 'founded on the unlawful thing done or intended to be done.'" (R. V. V, pp. 157, 158.) But in the present cases, the relief sought was founded on fraudulently obtained adjudication and with deliberate knowledge and intent to defraud the court which had already been defrauded to obtain such adjudication.

The Petitioner also relies on the case of Barnes v. Barnes, 282 Illinois, p. 593. That case was a suit for an accounting by a sister against her deceased brother's estate, for an accounting of money and securities given to her brother during his life time for investment and safe keeping. The evidence of a great many witnesses showed that the brother had received and taken charge of the money of the sister and had invested it in stock and securities for her. The court held that there was

ample ground for an accounting. It was claimed that twelve letters purporting to have been written by the brother were forgeries. There was a large number of other letters to show the relations of the parties.

The Appellate Court held that there was no finding in the decree as to the alleged forgeries. This really makes the opinion of the court on this point dictum.

The case of Munn v. The Americana Co., 83 N. J. Eq. 309; 91 Atl. 87, is not in point here. That was a case in which Munn & Company attempted to enjoin defendants from using the words "Scientific American", in connection with an encyclopedia. Munn & Company had previously agreed with the Americana Company to permit that company to represent that the encyclopedia was the work of the Scientific American and to thereby avail themselves of the reputation of that journal for the purpose of attracting subscribers for the book. This agreement had expired.

The court held that Munn & Company having entered into this fraud upon the public could not, after the expiration of this agreement, enjoin the Americana Company from continuing the use of the name "Scientific American" in connection with the encyclopedia and dismissed the bill on the ground of "unclean hands". No other relief had been asked in the bill and the court merely made it clear in its decree that its refusal to enjoin the use of the said words upon the encyclopedia did not thereby give the Americana Company a right or license to use the name, "Scientific American", for other purposes than the encyclopedia.

The case of Harris v. Harris, 208 Ala. 20, 93 So. 841, cited by Petitioner, does not sustain its contentions on the point of law raised by the petition for certiorari. This was a will case brought to set aside a judgment of the Probate Court. A demurrer was sustained by the lower court to complainant's bill of complaint on the ground that the complainant was in court with "unclean hands." The complainant who was a devisee under the will, and an heir-at-law was charged with entering into a fraudulent agreement with other heirs to defeat the will. The court refused to apply the doctrine of "unclean hands" in this case, not because of any regard for complainant, but because complainant and defendants in the suit were not the only ones involved. To have entered a decree of "unclean hands" in this suit would have injuriously affected other devisees or heirs, who were not in any way involved in the fraud. The court held that to deny relief under these circumstances would allow the maxim to work injustice and wrong. The court further held that the decree which had been entered fraudulently involved the integrity of the decree of the Probate Court and should therefore be vacated. It will therefore be seen that this case in not in point in the present suits.

The citation from 21 Corpus Juris, Sec. 173, p. 188, cited in Petitioner's brief is unimportant, as it merely refers to the case of Barnes v. Barnes, supra, which we have discussed above and shown to be not in point.

As to the statements of law and cases cited on page 7 of Petitioner's Main Brief, under points II, III, and IV,

we have no quarrel with these statements because they relate to points of law that are in no way involved by the petition for certiorari. It is therefore deemed unnecessary to take up the Court's time with a prolonged discussion of such points. For instance, as to Petitioner's point II, the Circuit Court of Appeals in its Opinion in these cases pointed out that in dismissing the bills of complaint it was not acting as an avenger of wrongs committed at large. (R. V. V., p. 122.)

As to point III on said page 7, of Petitioner's Main Brief, the Court of Appeals' decision, which was not challenged by the petition for certiorari, held that the wrongful conduct of Petitioner was directly connected with the matter in litigation.

The same applies to point IV. The Court of Appeals and the District Court both held that fraud was proved in these cases, and that finding was not challenged by the petition for certiorari. It is therefore not an issue here.

II.

PETITIONER'S CLAIM THAT ITS "UNCLEAN HANDS" AFFECTED ONLY PART OF ITS SUIT, IS UNTENABLE.

In framing the question presented on page 2 of the petition for certiorari herein, the Petitioner assumes that the question of "unclean hands" only affected one of the causes of action, and that other causes of action in these suits were "unsullied."

This claim of the Petitioner is untenable and will not bear analysis. Initially, before suits were filed by Petitioner, its illegal conduct may have related solely to the Downie Patent, No. 1,511,114, because of the illegal contract entered into with Bernard Clutter. However, once the Petitioner had filed suit against the Byers Company on Downie Patent, No. 1,511,114, including in that suit various other patents not involved in the fraud initially, this action of Petitioner in combining together in one suit a patent as to which it had a fraudulent agreement with other patents not so involved, made the entire suit a fraudulent one. They were all combined in a single bill of complaint with a general prayer for an injunction and accounting. The entire suit thus became tainted with the fraud.

Then, having obtained its primary objective by obtaining a decree in its favor in the Byers case based upon this fraud, the Petitioner thereupon filed these present suits and attempted to obtain a preliminary injunction against Respondents, basing its claim to this preliminary injunction upon the "fraudulent adjudication" obtained in the Byers case. All of the patents sued upon in these cases thereupon became tainted with the fraud, because being deliberately selected and involved by Petitioner in bills of complaint having as their objective the defrauding of the Courts, the public and these Respondents.

In Carrington v. Pratt, 18 How., 63, at p. 67, 15 L. Ed., 267 at p. 268, this Court held that while a suit might be good in part and bad in part, where for instance im-

proper items had been included through inadvertence or mistake in the cause of action, a different rule applies where the improper items were inserted with the intention to defraud, because in that case, the whole suit becomes tainted with fraud.

The Court of Appeals had the question raised by this petition for certiorari before it on the petition for rehearing in these cases. It refused to recognize the right of Petitioner to any relief because the entire suits were tainted with fraud, by stating in 64 Fed. (2d) 39 at p. 40, as follows:

> "We have not held any of the patents in suit invalid nor adjudicated any of the rights of the parties inter sese. The doctrine which we have applied is simply that if one, as actor, seeks to set the judicial machinery in a court of equity in motion upon grounds in respect to which his conduct is sullied, he will find the doors of the court closed against him. The bar is said to be 'in limine.' The plaintiff is repelled as of the date of the filing of the bill and in respect of the maintenance of the action then instituted."

Error Assigned By Writ Is a Misconception of Holding By the Court of Appeals.

The Court of Appeals did not, as stated by the Petitioner (p. 2), find "that plaintiff had come into court with 'unclean hands' in regard to one only of the patents involved in each suit." On the contrary, the Court of Appeal held that the suppression to obtain the fraudulent adjudication in the Byers suit combined with urging of this adjudication in the instant cases brought

Petitioner into Court with "unclean hands." This is made particularly clear by the Memorandum on Order for Denying Petition for Rehearing (R. V. V., pp. 158, 159).

Thus, Petitioner has assigned error as to a ruling which was not actually made by the Court of Appeals. Moreover, the ruling actually made that the "unclean hands" extended to the entire suit presents an entirely different question from the one presented by the Petitioner. It presents a question of fact not presented by the assigned error, a question with which the Court of Appeals was particularly familiar, since the holding that the fraudulent adjudication sullied each entire suit involved a recognition by the Court of Appeals that these patents had been treated both in the Byers case and these cases as a single development in the art.

In a similar situation, in Southern Power Company v. North Carolina Public Service Company, 263 U. S. 508, 68 L. Ed., 413, this Court said at page 509:

> "This writ must be dismissed. The petition therefor stated that the cause involved a grave question of vital importance to the public, and alleged as special reason for its re-examination that the decree would deprive petitioner of property without due process of law, and of freedom to contract, contrary to the Federal Constitution. The opinion below is reported in 33 A. L. R. 626, 282 Fed. 837.
>
> "The argument developed that the controverted question was whether the evidence sufficed to establish actual dedication of petitioner's property to public use,—primarily a question of fact. That is not the ground upon which we granted the petition, and, if sufficiently developed, would not have moved us thereto.

"Heretofore we have pointed out the necessity for clear, definite, and complete disclosures concerning the controversy when applying for certiorari. Furness, W. & Co. v. Yang-Tsze Ins. Asso. 242 U. S. 430, 61 L. Ed. 409, 31 Sup. Ct. Rep. 141; Layne & B. Corp. v. Western Well Works, 261 U. S. 387, 67 L. Ed. 712, 43 Sup. Ct. Rep. 422.

* * * * * * * * * * * * * * *

Dismissed."

It will therefore be seen that the question raised by the petition for certiorari assumes that part of Petitioner's suits remains "unsullied" while, as a matter of fact, it has been shown above that the entire suits are tainted with the fraud perpetrated on the courts and these Respondents. The decision of the Circuit Court of Appeals in these cases should therefore be affirmed.

III.

EQUITY RULE 26 NOT INVOLVED IN THESE CASES.

The decision of the Court of Appeals in these cases in no way affected or involved an interpretation of Equity Rule 26. The Court merely said (R. V. V, p. 158):

"Such new Equity Rules are not intended to change the general nature and characteristics of a court of equity as a court of conscience in which the granting of relief is largely discretionary and the court is not bound by hard and fast rules. Cf. Pope Mfg. Co. v. Gormully, 144 U. S., 224, 265-7."

This is merely a succinct statement of a fact, obvious to anyone, that the new Equity Rules were not intended

to restrict the doctrine of "unclean hands." It certainly cannot be construed to be a holding that a plaintiff is not entitled to join several patents in one cause of action. In fact, the ruling by the court below holds that the plaintiff may join several patents in a single cause of action.

The Petitioner, on pages, 8, 9, 10 and 11, of its "Main Brief" adduces the argument that under Equity Rule 26, it has been the practice to decide each cause of action on its own merits.

The Petitioner cites, for example, suits based upon more than one patent, and points out that the holding of one patent invalid does not affect the others, which are in turn adjudicated upon their own merits. The cases relied upon as sustaining this proposition are: Leeds and Catlin v. Victor Talking Machine Co., 213, U. S. 301, 53 L. Ed., 805; Geneva Furniture Mfg. Co. v. Karpen, et al, 238 U. S. 254, 59 L. Ed., 1295; Kansas City v. Devol, 81 F. R. 726; Sly v. Central Iron, 201 F. R., 683.

This is all very true and there is nothing in the Court of Appeals' decision in these cases which is in any way in conflict with that proposition.

However, in the cases relied upon by Petitioner, no question of fraud or "unclean hands" was involved. Where the question of fraud or "unclean hands" is involved, a different rule applies.* The entire suit becomes tainted with fraud, and no relief will be granted.

The Petitioner knew, and could have avoided its present situation by basing its suits upon patents as to which

*Carrington v. Pratt, 18 How., 63, 15 L. Ed., 267.

there could be no question of fraud or "unclean hands." It should not have enmeshed itself in fraud. It now asks the Court to assist it to escape from the consequences of its own fraud. This, courts of equity have always consistently refused to do.

Petitioner's Pleadings and Proofs Considered All Patents As One Development, Under Conjoint Use Doctrine.

When the Court of Appeals dismissed Petitioner's suits on the ground that it was guilty of "unclean hands," its counsel cast about for some means of salvaging at least a portion of these suits. The plan hit upon was to claim for the first time on petition for rehearing before the Court of Appeals, that five patents were involved, and to further claim that the fraud only related to one patent, (this claim Respondents have shown herein to be false) and that the Court of Appeals should not have dismissed the suit as to the other patents.

Even if it were not the rule in equity to refuse relief to parties guilty of "unclean hands," Petitioner's claim could not be sustained.

While five patents were sued upon, the Petitioner was merely following the common practice in patent cases (permissible before Equity Rule 26 was made) of grouping together for a suit, a series of patents directed at a single excavating machine manufactured by Respondents.

In its bills of complaint the Petitioner appeals to the Court on the theory that all the patents in suit were to be considered in such a way as to constitute one single cause of action by alleging conjoint embodiment and use

in one and the same construction. The following paragraph appears as paragraph 17 in the bills of complaint against the respective Respondents (R. V. I, pp. 8, 101):

> "XVII. The inventions of the aforesaid patents are susceptible of conjoint embodiment and use in one and the same construction, and have been so conjointly embodied and used in the machines made and sold by Defendant as aforesaid."

Similar paragraphs were also contained in the supplemental bills of complaint (R. V. I, pp. 48, 143).

It will thus be seen that the Petitioner in these suits was not joining separate and independent patents wholly unrelated to each other, as may be done under the present Equity Rule 26, but that the Petitioner was following the practice prior to the adoption of Equity Rule 26 of joining in one suit a plurality of patents where the inventions covered by these patents embodied one infringing process, machine, manufacture, or composition of matter. (Walker on Patents, Sec. 468, 6th Ed.) This practice was old long before the adoption of Equity Rule 26 in 1912. Thus, in Gamewell Fire-Alarm v. City of Chillicothe, 7 F. R., 351, decided in 1881, the Court said:

> "The bill shows that re-issues Nos. 8,891 and 8,896 are for improvements in fire alarms, and that the complainant has the right, under re-issue 4,588, of constructing apparatus for fire alarms and the transmission of municipal intelligence, and alleges that the defendant uses each of these inventions in one machine—uses them all in the same machine. It is plain that the use of all these inventions together, to constitute a machine, is the cause of action set out in the bill; the construction of a fire alarm, such as

defendant now uses, being the injury complained of and against which an injunction is prayed * * *

"And it may be said generally that a demurrer for multifariousness will not lie to a bill founded on several letters patent, where all the inventions are set out as constituting one cause of action, and the prayer relates singly, as to discovery and remedy, to a machine constructed according to and containing all said inventions. * * *

"To escape the objection of multifariousness such a bill should aver that said inventions are capable of conjoint as well as separate use, and are in fact so used by defendant. (Nellis v. Lanahan, 6 Fisher, 286.)

"In the bill under consideration the letters patent are properly joined, and, in fact, constitute one and the same cause of action.

"The demurrer is, therefore, overruled."

Petitioner says on page 11 of its "Main Brief" that Rule 26 supplanted and superseded all other procedures for joining causes.

But this is not so. Equity Rule 26 does not supplant and supersede all other procedures for joining causes. It merely permits the joining of certain causes of action, the joining of which would have been multifarious before the Rule was made.

However, the bills filed by the Petitioner in these cases would not have been multifarious before the Rule was made, because the bills allege "conjoint use."

The Evidence as to All Patents Was Commingled in Instant Cases and in Byers Case.

In the instant cases, Petitioner's witness Downie gave a history of the development of Petitioner's commercial machine (R. V. I, pp. 221 to 251). In this history, he described the devices of the patents in these suits and said that the devices of all these patents were incorporated in the present commercial machine. Then he testified as to the number of these machines sold without distinguishing between the machines having the devices of all the patents and those having only one or more. This was clearly a commingling of proofs as to all patents for the purpose of showing commercial success in an attempt to establish validity and to obtain a broad interpretation in the light of the authorities.

Furthermore, Petitioner demonstrated one machine to the District Court and one machine only (Downie, R. V. I, pp. 253-255). It did not demonstrate the devices of the different patents separately. It showed a motion picture of an identical machine to impress the Court (Paul Sessions, R. V. II, p. 792). It then pointed to this one machine as evidence of the successful working of all of the devices of the patents in suit, saying that all of these devices were embodied in it (Downie, R. V. I, p. 254).

Likewise, Petitioner offered evidence intended to show that certain functional advantages alleged to be inherent in the Clutter and Downie patents were actually useful

and valuable. Thus, an operator, one Morrison, testified (R. V. I, pp. 303-306) that he had used one Keystone machine "like a pick" (an alleged function of Clutter) and that he had used the same machine for "undercutting" (an alleged advantage of the first Downie patent). If this evidence has any value, it seeks to show the value of the two principal patents in suit here by evidence as to use of one machine. This is certainly commingling of evidence.

As a matter of fact, throughout the testimony of Petitioner's witnesses, particularly of its experts, Downie and Sessions, Petitioner's commercial machine was treated as one continuous development with the alleged inventions of the patents in suit being merely steps in this development. This same course was pursued in the Byers case as shown by the Opinion of District Judge Jones (R. V. I, p. 14) which speaks of the patents merely as successive steps of a single development. Thus, in in Judge Jones Opinion appears the following statement, at R. V. I, p. 15:

> "Without going into detail or discussing technical means, I think the plaintiff's patents have initiated and accomplished, in a practical, commercial, and economical way, an advance in the field of mechanical digging, and that through its efforts and development have produced a better and, in substantial respects, a new result out of old elements, in the art of trenching and digging."

This is also shown by the Opinion of the Court of Appeals in the Byers case, at 44 F. (2d) 283. The tenor of

this Opinion is indicated by such statements as the following, at page 283:

> "This case involves alleged infringement of a ditching or excavating machine manufactured by the plaintiff and claimed to be protected by four patents, * * * *."

and at page 285:

> "If there were any doubt about invention in Downie, it would certainly be resolved by the fact that the Downie improvements to the Clutter device have presented to the industry its present commercially acceptable excavating machine, and that this commercial machine was what was copied by the defendant."

It will be seen from this that the commercial machine and the success thereof was of great influence upon the Court of Appeals in the Byers case, that is, in causing the Court of Appeals to uphold these patents. It will also be apparent that the patents were treated as a group whose devices were embodied in a single machine made possible by the Downie patent 1,511,114.

But when the evidence in the instant cases showed that a public use had been suppressed and that this public use might show this Downie patent to be invalid and deprive this group of patents of the supporting factor of commercial success, the Court of Appeals clearly saw that the Respondents had not had a fair trial in the District Court where the fraudulently obtained Byers Opinions hung over them like a cloud, as shown by Judge Hahn's Opinion, at R. V. II, p. 1067. It was then that

the Court of Appeals, in its Memorandum on Order Denying Petition for Rehearing, said at R. V. V, p. 159:

> "This court has permitted the evidence of unclean hands to be presented in the court below and that court to consider the matter of the Joplin use in its bearing upon the defenses of anticipation and prior public use. **We have held in the present cases that the plaintiff was barred not by its failure to disclose this prior use, if it was such, but by the advantage which it sought to take of a decree of validity obtained in the manner stated. With the introduction in evidence of all the pertinent facts both the earlier decree of the District Court and the affirmance by this Court lose their efficacy as controlling factors (the law of the case) in subsequent decisions either in the District Court or here.**"

Thus, after having pleaded its case in such a manner as to group all the patents together; and having offered its proofs, in accordance with said pleadings, on the theory that all the patents should be considered as one single development, we find the Petitioner for the first time in its petition for rehearing before the Court of Appeals trying to unscramble these patents from each other in an attempt to save itself from the consequences of its fraud. These facts were all before the Court of Appeals, which could not fail to realize the interdependence of the patents sued upon, and that each of these suits is an integral suit; that the fraud, originating as to one patent, has spread to the entire suits through the voluntary acts of Petitioner in urging fraudulently obtained adjudication and commingling its proofs as to all patents; and that the whole matter is so tainted with fraud that the Petitioner is not entitled to relief in these suits.

In the Byers case and in the instant cases, Petitioner relied upon the conjoint use of several patents, each to strengthen the other. It should not now be allowed to claim that these patents should be considered separately to escape dismissal because of "unclean hands."

Since it relied upon the first Downie patent and alleged commercial success and utility of the device of this patent to strengthen the other patents in suit, to claim a unit value for the group, the group and their joint strength are necessarily affected by the fraud perpetrated in connection with that patent. Petitioner, "having made its bed, must lie in it," and cannot now complain.

The patents were all joined together like confederates in a conspiracy, having a common purpose, and marching under the same banner, one depending upon the other, so that the fraud infected all and therefore they must all go down together.

Petitioner Asks Consideration of Testimony from Another Suit in Which Respondents had no Part.

Petitioner has taken a unique course in this matter. It first injected into these cases, the testimony given by certain witnesses upon a rehearing in the Byers Case. This was done under the guise of a motion to vacate the supersedeas which Petitioner pretended to support by testimony given in the Byers rehearing. Not all of the Byers rehearing record was offered, merely the testimony of selected witnesses.

It should be remembered that these Respondents had no part in the Byers rehearing. They had no oppor-

tunity to examine or cross-examine the witnesses whose testimony was thrown into these cases by motion. Moreover, these witnesses were not newly discovered but they were witnesses available to Petitioner at the trial of the instant cases. As a matter of fact, Petitioner had practically a year's notice to produce these witnesses and was actually warned by Judge Hahn that it should produce some or all of them at the trial if their testimony were considered of any importance.

The testimony which Petitioner attempts to project into the record of the instant cases by this novel and entirely unwarranted method is the testimony which Bernard R. Clutter gave at the Byers rehearing and also the testimony given at this rehearing by Veleair C. Smith, Frank Oliver and John L. Burdge. It should be noted, however, that Bernard R. Clutter gave two depositions in the instant cases and the Petitioner had full opportunity to cross-examine and did cross-examine him both as to his Joplin development and as to the suppression matter. Clutter's deposition as to the suppression matter (R. V. II, p. 736) fully related his version of the conspiracy and counsel for Petitioner cross-examined him at length. Moreover, at the time and long prior to this time, as admitted by Philip E. Siggers, of counsel for Petitioner, (R. V. II, p. 1051) Petitioner was in possession of the numerous documents and all of the facts relating to this conspiracy.

Smith and Oliver were employees of Petitioner and available at any time. Since Burdge attended the Byers rehearing as a witness in behalf of Petitioner, he un-

doubtedly could have been produced at the trial of the instant cases. If any of these witnesses had refused to attend the trial, their depositions could have been taken.

In the instant cases, the first deposition of Bernard R. Clutter, which related to the Joplin public use, was taken on February 24, 1930. The depositions of a number of corroborative witnesses, as to this public use, were taken on March 19, 1930. The second deposition of Bernard R. Clutter, which related to the conspiracy, was taken on October 21, 1930. Respondents' motion to compel production and inspection of documents relating to the suppression matter was denied without prejudice by Judge Hahn on February 2, 1931, as a result of a hearing on January 3, 1931. At this hearing, Petitioner was notified that these documents should be produced at the trial. At the same time, Petitioner was notified by Judge Hahn that it should produce any witnesses that it might have in connection with this suppression matter. The trial started on March 3, 1931, was adjourned after a week or two because of the illness of Judge Hahn and was concluded in May, 1931.

With all this time and notice to produce these witnesses, Petitioner saw fit to remain supine and make no effort to present their testimony at the trial. Even to this day, Petitioner has made no effort to introduce the testimony of these witnesses into the instant cases in the orthodox way, so as to give Respondents the opportunity of cross-examination. And, of course, it is now too late. Instead, Petitioner resorted to a motion to vacate supersedeas shortly before the decision by the Cir-

cuit Court of Appeals. Then, after this decision and decision upon rehearing, Petitioner selected the depositions of these witnesses and printed them as the major part of Volume V of the Transcript of Record.

It is difficult to see what possible justification Petitioner can have for entering the Supreme Court of the United States in these cases and attempting to support its claims to relief by testimony taken from a case with which the Respondents had no connection whatever and had no right of cross-examination of these witnesses.

The Opinion of Judge Jones on the Rehearing of the Byers Case Has No Place in This Record.

In addition to the incomplete record of the testimony in the Byers rehearing which has been embodied in Volume V of the Transcript of Record in the instant cases, Petitioner has also included the Opinion of Judge Jones rendered as a result of this Byers rehearing. Respondents were not involved in the Byers case, they took no part in the said rehearing, they did not examine nor cross-examine any of the witnesses and had no right to do so.

Petitioner is asking this Court to set the Opinion of District Judge Jones against the Opinions of District Judge Hahn and of the three judges of the Court of Appeals of the Sixth Circuit. This Opinion of Judge Jones was not rendered in the instant cases at all and certainly can have no bearing upon the action which has been taken or is to be taken by the Court in these cases.

Every lawyer knows that the Opinion of a Court cannot be properly valued without a study of the complete record upon which this Opinion is based. Yet, this Petitioner does not even submit to this Court the complete record of the Byers rehearing. The Byers record contains the testimony of a number of other witnesses, including that of Rex Downie who made a number of admissions upon cross-examination.

However, even if the complete record of the Byers rehearing had been furnished this Court, it is submitted that this record and the Opinion by Judge Jones should be ignored and that Petitioner should be charged with the costs for the unwarranted introduction of this extraneous matter into the record of the instant cases. It is fundamental that Respondents cannot be bound by the testimony of witnesses whom they have had no right to cross-examine. It is equally fundamental that the Petitioner having failed, after more than ample notice, to offer witnesses in the instant cases, cannot take the testimony of such witnesses at a subsequent date in another case and project such testimony into the instant cases through the medium of an affidavit in support of a motion to vacate supersedeas.

Equally unavailing is the contention by Petitioner that the testimony of Bernard R. Clutter in open Court before Judge Jones on rehearing should be given more influence than the depositions given by Clutter in the instant cases. Petitioner had full right of cross-examination at these depositions and was possessed of the originals or copies of all of the documents forming a

basis for such depositions. Petitioner was at liberty to take Clutter into open Court if he refused to answer any question and cannot now do by indirection what it failed to do directly at the proper time in the instant cases. Were the rule otherwise, litigation would never end.

But all of the talk made by Petitioner alleging the importance of Clutter's appearance in open Court is entirely misleading. The documentary exhibits of record in these cases conclusively establish the fraud and unclean hands. The admissions of Downie and Elmire merely serve to emphasize the extent of the fraud. This is clearly shown by the exhaustive analysis made by Judge Hahn and by the Opinion of the Circuit Court of Appeals. As a matter of fact, Clutter's testimony before Judge Jones on rehearing did not materially vary from his testimony in the instant cases but, even if it had, Petitioner would still be conclusively shown to be guilty of fraudulent conduct and unclean hands by the documentary exhibits and the testimony of Downie and Elmire.

The Petition Raises Questions Not Included in Errors Assigned.

This Petitioner has devoted more than half of its Main Brief to the contention that the Court of Appeals erred in holding that Petitioner "came into court with unclean hands". But this alleged error was not assigned in the petition for writ of certiorari, filed by this Petitioner. Nor is the decision of this question necessary, in

any sense, to the review by this Court of the errors actually assigned.

The sole question before this Court as a result of the petition is whether the Court of Appeals should have dismissed the suit as to all patents sued upon or only as to the one patent, with regard to which the unclean acts started. By its failure to allege in its petition that the Court of Appeals erred in holding Petitioner guilty of unclean hands, Petitioner is barred from raising this question here. As a result of its petition, it stands in the position of acknowledging "unclean hands" in connection with the Downie patent No. 1,511,114 while contending that the other patents are not affected thereby. It is submitted that it is the fixed policy of this Court to confine the review on certiorari to the errors assigned by Petitioner for the writ.*

Furthermore, the question discussed by Petitioner in its twenty-two page Appendix A involves a set of facts which was exhaustively analyzed by District Judge Hahn with the result that he found the Petitioner guilty of fraud and highly reprehensible conduct. This finding of facts was concurred in by the Circuit Court of Appeals. Now, this Court is asked to analyze and weigh these

*U. S. Supreme Court Rule 27, Par. 4; Alice State Bank et al. v. Houston Pasture Company, 247 U. S., 240, 62 L. Ed., 1096; Hubbard v. Tod, 171 U. S. 474, 43 L. Ed. 246, 19 Sup. Ct. 14; Steele v. Drummond, 275 U. S., 199, 72 L. Ed., 238; Blair v. Oesterlein Machine Company, 275 U. S. 220, 72 L. Ed. 249; Webster Electric Company v. Splitdorf Electrical Company, 264 U. S. 463, 68 L. Ed. 792; Commercial Credit Company v. United States of America, 276 U. S. 226, 72 L. Ed. 541; Donnelley v. United States of America, 276 U. S. 505, 72 L. Ed. 676; Warner v. Independent Pier Company, 278 U. S. 85, 73 L. Ed. 195; Federal Trade Commission v. Pacific States Paper Trade Association et al., 273 U. S. 52, 71 L. Ed. 534.

facts and determine whether or not the concurrent findings of both lower courts are correct. But it is well settled that this Court will accept findings concurred in by the two lower courts unless they are clearly erroneous.* The cited authorities show that it is merely necessary that evidence exist to support the findings and that this Court will not weigh this evidence as to adequacy and credibility but will accept the findings in the absence of apparent error.

Cases Relied Upon by Petitioner.

In Delk v. St. Louis & San Francisco Railroad, 220 U. S. 580, 55 L. Ed. 590, a suit for damages for personal injury, this Court did not hold that Petitioner was entitled to review of a question not assigned as error by the petition for the writ. It merely exercised its power to decide a question of law, the decision of which it deemed necessary for the disposal of the case. Neither

* Washington Securities Company v. United States, 234 U. S. 76, 58 L. Ed. 1220; Baker v. Schofield, 243 U. S. 114, 61 L. Ed. 626; Piedmont & George's Creek Coal Company v. Seaboard Fisheries Company, 254 U. S. 1, 65 L. Ed. 97; Geddes v. Anaconda Copper Mining Company et al., 254 U. S. 590, 65 L. Ed. 425; Bodkin v. Edwards, 255 U. S. 221, 65 L. Ed. 595; Oceanic Steam Navigation Company (Limited) v. Aitken et al., 196 U. S. 589, 49 L. Ed. 610; Deslions v. La Compagnie Generale Transatlantique, 210 U. S. 95, 52 L. Ed. 973; Reese v. Philadelphia & Reading Railway Company, 259 U. S. 463, 60 L. Ed. 384; Causey v. United States, 240 U. S. 399, 60 L. Ed. 711; Varner v. New Hampshire Savings Bank, 240 U. S. 617, 60 L. Ed. 828; International Navigation Company v. Farr & Bailey Manufacturing Company, 181 U. S. 218, 45 L. Ed. 830; Luckenbach v. McCahan Sugar Refining Company, 248 U. S. 139, 63 L. Ed. 170; Southern Pacific Company v. Bogert, 250 U. S. 483, 63 L. Ed. 1099; L. E. Waterman Company v. Modern Pen Company, 235 U. S. 88, 59 L. Ed. 142; United States v. Chemical Foundation, 272 U. S. 1, 71 L. Ed. 131; New York Dock Co. v. Steamship Poznan, 274 U. S. 117, 71 L. Ed. 955; Road Improvement Dist. No. 1 v. Missouri P. R. Co., 274 U. S. 188, 71 L. Ed. 992; Norton v. Larney, 266 U. S. 511, 69 L. Ed. 413; Mason v. United States, 260 U. S. 545, 67 L. Ed. 396.

did the Court pass on facts of the case as here suggested by Petitioner.

In Panama Railroad Company v. Napier Shipping Co., 166 U. S. 280, 41 L. Ed. 1004, a libel in personam to recover damages for injury to a steamer, this Court did not hold that the Petitioner was entitled to a review of a question not assigned as error by the petition for the writ. On the contrary, though the Respondents sought to limit the Court to consideration of the damages, the Court pointed out, at page 283, that "the petition for the writ of certiorari set forth the facts of the case, and claimed that upon those facts the libel should have been dismissed—making no claim whatever that error had been committed in the assessment of damages". This does not support Petitioner's suggestion, here made, that the Court will review alleged errors of law not assigned in the petition for the writ and that it will examine and analyze the facts agreed upon by both lower courts as would be necessary to decide this question of error not assigned.

In Cole v. Ralph, 252 U. S. 286, 64 L. Ed. 567, suits relating to conflicting mining locations, this Court said, at page 289, that "counsel have united in presenting to us all questions thought to arise upon the record". Thus, the whole case was before the Court, apparently by agreement of the parties that all points should be decided. Clearly this offers no support for the proposition that this Court will consider alleged errors not assigned in the petition.

The case of Lutcher v. Knight, 217 U. S. 257, 54 L. Ed.

757, contains no support for the theory that this Court will review questions not assigned as errors in the petition for the writ. It merely holds that this Court has the power to decide the whole case submitted. But owing to the special facts of this case, the case was remanded to the Court of Appeals for decision. Plainly the error passed upon was alleged in the petition for the writ. This Court said, at page 268, that it was "patent from the statement we have made that the only ground upon which the power to issue certiorari could have been exerted was the failure of the court below to consider the case before it". But in the instant cases, the ground sought to be reviewed was not the basis for the issuance of the writ at all. It was not even mentioned in the petition.

The case of Olmstead v. United States, 277 U. S. 438, 72 L. Ed. 944, was an exceptional case involving the question of "wire-tapping". In that case, the order allowing the writs of certiorari limited arguments to the question as to whether or not "wire-tapping" was in violation of the 4th and 5th amendments to the Constitution. Certain members of the Court were much impressed by the unethical aspect of obtaining evidence by wire-tapping and by the fact that it was a crime or misdemeanor in violation of a State law. Therefore, the Court stepped beyond the strict limits of the order granting the writ and decided these points.

However, the evidence as to these points was clear and undisputed and had a direct relation to the question of admissibility of the evidence, which was the broad question involved. Moreover, the Court recognized the great

public importance of the points involved and desired to avoid any misapprehension of its views as to such points.

But in the instant cases, this Court is asked to pass upon an independent question of law not raised by the petition and to analyze and overthrow a finding of facts concurred in by both lower courts. It is asked to decide whether or not this Petitioner has been guilty of fraud and unclean hands, which need not be decided in order to avoid misapprehension of the views of the Court or in order to determine whether the bills should have been dismissed as to all or only one patent. Petitioner might as well ask this Court to pass upon the validity and infringement questions involved in these suits. Clearly, the decision of the questions raised without assignment is not necessary to the question assigned. It is even more clear that no such question of public importance is involved as in "wire-tapping".

The case of United States v. Elliott, 3 F. (2d) 496, does not appear to be in point to the question here involved. However, the case does call attention to the limitations upon the writ of certiorari.

Errors in Main Brief for Petitioner.

There are certain erroneous statements in Petitioner's Main Brief which tend to present the picture of this situation in an untrue light. Though these errors may not seriously affect the single question raised by the petition, it is deemed advisable to call attention to some of them so that this Court may have a correct understanding of the facts.

Thus, Petitioner attempts to create the impression that its fraud was based merely upon the payment for an affidavit. But the Opinion by Judge Hahn shows that Petitioner's fraud was far more extensive.

The appeal from Judge Jones in the Byers rehearing matter was dismissed because it was not in proper form. Counsel for the Byers Company apparently thought no formal appeal was necessary and merely sent the papers in the case to the Court of Appeals on the theory that the Court of Appeals had never surrendered jurisdiction of the matter. However, the defendants in the Byers case have again appealed and, according to our understanding, they are now in the Court of Appeals. Also the Memorandum on Petition for Rehearing by the Court of Appeals in the instant cases calls attention to the fact that it is not barred from considering this matter at a later date (R. V. V, p. 159).

Petitioner seeks, by quoting a meager portion of the Court's Opinion, to create the impression that the Court of Appeals arrived at its conclusion by implications. But the Opinion of the Court of Appeals and its Memorandum on Petition for Rehearing, both in the instant cases, made it clear that the evidence conclusively established fraud and "unclean hands".

Petitioner says that the Court of Appeals thought the wrongful conduct on the part of Petitioner related only to one of the patents in suit. But the Court of Appeals in its Memorandum on Petition for Rehearing made it clear that the urging of the fraudulently obtained adjudication in these suits tainted all of the patents.

The bills of complaint plead conjoint use and not conjoint and several use as asserted by Petitioner. This is true both as to the bills and the supplemental bills.

In a footnote on page 12 of its Main Brief, Petitioner seeks to create the impression that the Joplin public use is only relied upon by Respondents to meet some of the claims of the Downie patent. But Respondents believe it clear that all of the claims of this patent which are in suit are invalid in view of this Joplin use.

Petitioner asserts, on pages 13 and 14 of its Main Brief, that Clutter, in his testimony in the Byers rehearing, admitted the evidence was not suppressed. But this is not true, even though a reference to the Byers rehearing testimony is out of place in these suits. As a matter of fact, Respondents have shown by the testimony of Mr. Fay, counsel for Byers, (R. V. II, p. 1041) that the testimony was suppressed.

At page 14 of its Main Brief, Petitioner says that all the courts ruling on the question have found that the Joplin evidence did not anticipate or otherwise invalidate any of the claims of patent 1,511,114. But Judge Jones is the only one who has ruled directly on this question. However, Judge Hahn, though he refrained from ruling on this question, out of deference to the Court of Appeals, made it clear that he thought the device of the Joplin use was an anticipation of the first Downie patent (R. V. II, pp. 1088-9).

Petitioner also says on page 14 of its Main Brief that the Court of Appeals did not find the evidence suppressed. This is incorrect as shown by the record and the Court's Opinion.

Petitioner says that Clutter is unworthy of belief but this is not so. The fact that Clutter was uncertain about the actual signing of the affidavit is an immaterial matter. In any event, the documentary evidence and the admissions of Petitioner's witnesses Downie and Elmire more than establish the guilt of Petitioner. Both Judge Hahn and the Circuit Court of Appeals concurred in this.

Petitioner purposely ignores the contract which it made with Clutter and lays great stress on the affidavit. It admits paying for the affidavit and then, without an iota of evidence in these cases to support the statement, it accuses Respondents of paying Clutter for his testimony. It is not necessary to dignify such a baseless charge by denial.

Much talk is made about preserving evidence by affidavit. But a contract to pay several thousand dollars to the chief witness of a public use, contingent upon the success of efforts to have held valid a patent which would be invalidated by the said public use, can hardly be termed preservation of testimony. Its inevitable tendency is to suppress the evidence of this witness.

Petitioner's Main Brief makes the claim that the contract which it made with Clutter was for the purchase of patent rights. But Downie admitted on cross-examination that he knew at the time of signing the affidavit that Clutter had no patent rights to sell (R. V. II, pp. 1024-1027). Yet he recognized the existence of this contract and operated under it for several years.

Downie claimed that Clutter, when first approached, led him to believe that he had patent rights but that

when he found out shortly afterward that Clutter had no patent rights, he still felt obligated to carry out the contract. In commenting on this, Judge Hahn said (R. V. II, p. 1091) "Anyone who had heard Downie testify over a period of time as this court did would not come to the conclusion that he would buy a 'pig in a poke', as his counsel argued to the court."

It is said on page 24 of Petitioner's Main Brief that Clutter's testimony is opposed to that of Elmire. But this is not so. Clutter is corroborated by Elmire, even though Elmire is employed by Petitioner and is its own witness.

Testimony of Oliver, the Notary Burdge, Smith and Downie in the Byers rehearing is of no avail here. It is immaterial whether or not their testimony opposes that of Clutter.

Petitioner refused to produce the documents brought to light at the second deposition of Clutter, although its counsel had agreed at that testimony session to do so. This made it necessary for Respondents to file a motion to produce. The motion was denied when Petitioner agreed in court to produce the documents at the time of trial (R. V. II, p. 1099).

Naturally, Petitioner did not put in writing, in so many words, the fact that Clutter was being paid to keep quiet. A person who sets out to defraud the courts by suppressing testimony always resorts to devious ways

and means. But the documents tell the story too plainly to be misunderstood.*

It is true that Petitioner repossessed the machines that had been sold to Clutter in June 1927. But before repossessing these machines, it substituted cash for the consideration of its contract with Clutter.

Petitioner calls attention to its letter of December 17, 1928 (Def. Ex. 40, R. V. III, p. 246) to Clutter and intimates that this letter was such as to antagonize Clutter, claiming this as proof that there was no agreement to suppress. But it is noteworthy that this letter contained the following sentence calculated to make Clutter feel that he might expect more money if he continued to keep quiet: "We made a contract with you, and we believe that that contract has been or **is being** correctly and properly discharged."

There is no evidence in the record of these cases which supports the statement that the Joplin public use was seen by thousands of people. Testimony of the witnesses in the Byers rehearing is of no avail here.

If the device was known to thousands of people, why was it necessary to get Clutter's affidavit and enter the contract with him? The answer is that he devised the

* It is desirable to study the exhibits relating to this issue in their chronological order. So arranged as nearly as possible they are as follows: Def. 95, 96, 97, 37, 98, 114, 99; Pl. 74; Def. 101, 113; Pl. 73; Def. 100, 41, 27, 102, 103; Pl. 75; Def. 104, 105, 106, 107, 108, 109, 38, 110, 39, 111, 40; Pl. 45, 46; Def. 112, 129, 65; an undated ledger account Def. 93 and 94. The dates of the Cleveland case are as follows: December 22, 1926, bill of complaint filed; September 15, 1927, Judge Westenhaver began the taking of testimony; testimony completed September 19, 1927. Judge Westenhaver died about July 30, 1928, after an illness of several months. His successor took office December 28, 1928. Judge Jones rendered his decision January 23, 1929. A final decree was entered January 31, 1929.

apparatus and was the main operator, who would naturally be interested in claiming credit. He was the key man.

Preservation of the affidavit, which attempted to distort the facts, does not negative suppression. It was obviously kept so that Clutter could be confronted with it if he ever took the witness stand. It was an integral part of the plan to suppress.

Disclosure to Petitioner's counsel does not negative suppression. The non-disclosure by Petitioner's counsel then became the act of Petitioner.

Downie's testimony in these cases should be disregarded, except as to admissions against interest. Judge Hahn made it clear that he was an untruthful witness.

The Court of Appeals said that Clutter was hostile to others as a natural result of the affidavit. Both of his depositions show (R. V. I, p. 572; R. V. II, p. 736) that he was testifying under subpoena.

The affidavit, which was prepared by Downie and signed by Clutter, was not in accord with the facts. It represented the Joplin device as a failure. But the testimony of Clutter and a number of corroborative witnesses show that the device was a success (R. V. I, pp. 572-607; R. V. II, pp. 609-613).

Judge Hahn did not say that Clutter was the only man who could testify as to the details of the Joplin machine. He did say that, if there was any invention in the Joplin machine, Clutter was the inventor and that "Clutter was the one man who could take the position and make an affidavit that the work at Joplin was an experiment and

that it had been abandoned" (R. V. II, p. 1094). However, Petitioner was not content to leave this question to the courts.

Judge Hahn did not grant the requested preliminary injunctions. But he did require Respondents to post bonds and he refused to pass on a number of matters because of the Byers Opinions (R. V. II, p. 1067). Furthermore, he insisted on knowing what evidence had been used in the Byers case to such an extent that Respondents did not have an independent trial (R. V. I, p 387).

CONCLUSION.

In view of the foregoing we submit that the decree of the Circuit Court of Appeals should be affirmed.

Respectfully submitted,

EDWIN P. CORBETT,
LLOYD T. WILLIAMS,
EDWARD L. REED,
JOHN J. MAHONEY,
Counsel for Respondents.

WADE H. ELLIS,
CHALLEN B. ELLIS,
Of Counsel.

APPENDIX.

The Main Brief for Petitioner goes beyond the scope of the petition for the writ and attempts to reopen the broad question of "unclean hands." The attention of the Court has already been called to this effort in preceding sections, wherein it has been shown that it is the settled practice of this Court to confine the Petitioner to the errors assigned in the petition for the writ and, also, to accept the concurrent findings of two lower courts in the absence of clear apparent error.

The major portion of Petitioner's argument as to this improperly raised question is contained in Appendix A of the Main Brief for Petitioner. The series of statements contained in this appendix presents such an untrue picture of the actual facts which led the Court of Appeals to hold that Petitioner had come into equity with "unclean hands" that it is deemed advisable to recite herein the principal facts which formed the basis for the concurrent Opinions of the two lower courts that Petitioner was guilty of fraudulent conduct and the decision by the Court of Appeals that Petitioner was guilty of "unclean hands."

It should be understood, however, that this recital of facts is not a waiver by Respondents of its contention that the broad question of "unclean hands" is not before this Court. Respondents still insist that Petitioner is limited to the contention that the bills of complaint should have been dismissed only as to one patent and not as to all, since this was the only error assigned in the petition for the writ.

The Facts Upon Which Court of Appeals Ruled "Unclean Hands" Existed.

Prior to January, 1921, the Petitioner was making a ditching and excavating machine under Clutter patent 1,317,431. The character of this machine is shown in Plaintiff's Exhibit No. P-1 (R. V. III, p. 91). The scoop of this machine had no drop bottom and was pivotally attached to the ditcher stick. This caused difficulty in unloading where it was desired to unload the spoil in the wagons standing nearby. There was difficulty in spotting the load, and the scoop often injured the sides and other parts of the wagon.

In the winter of 1919 and the early part of the year 1920 Bernard R. Clutter, a brother of the patentee of the Clutter patent in suit, was operating one of the Keystone Clutter-type machines in the excavation of a basement for the Joplin Supply Company building, at Joplin, Missouri. Bernard R. Clutter was then employed by Wallower Brothers, Contractors, who had the contract for the excavation of the basement. Bernard, or "Burn" Clutter, as he was known, was having the usual difficulty common to this type of machine in unloading into wagons. The machine was spilling the dirt over the sides of the wagons and was breaking the wagons, due to the fact that the scoop often struck the sides thereof when it was released and allowed to swing downwardly.

The contractors were not making much headway with this machine, and they were put to extra expense in cleaning up the dirt which spilled over the sides of the

wagons. "Burn" Clutter told them he thought he could remedy the defects of this machine by having the scoop made rigid to the ditcher stick and providing that the bottom of the scoop should drop open in the unloading operation, instead of having the entire scoop drop as was then being done. The changes proposed by Clutter in the machine were conveyed to the officials of the Keystone Driller Company, who had a branch plant at Joplin, Missouri. These officials were of the opinion that this device of "Burn" Clutter's would not operate, because they said it would be impossible to close the drop-bottom of the scoop. The contractor, however, had confidence in Clutter and told the officials of the Keystone Driller Company to make the changes in the scoop that Clutter desired.

In order to save time, a type of scoop known as a skimmer scoop, which is used for skimming the ground in front of an excavator and which type of scoop is so designed that its bottom drops in unloading the dirt, was taken to the plant of the Keystone Driller Company at Joplin and rigidly attached to the ditcher stick of the Clutter-type machine then being made by the Keystone Driller Company. When completed, the scoop was held rigid on the ditcher stick and when it was desired to unload the spoil, the ditcher stick and scoop were moved to a point over the wagon and then by rope attached to a latch the bottom of the scoop was released and dropped downward, allowing the dirt to fall out through the bottom of the scoop. Clutter met the objection of the Keystone officials as to the closing

of the drop-bottom by the usual operator's trick of flipping or snapping the bottom shut.

This device was put into operation by Clutter at once and was used for a month or so until the basement was completely excavated. It proved to be a success. It eliminated the spilling over the sides of the wagon and no further trouble was had in breaking the sides thereof. The evidence shows that the device used by Clutter at Joplin, Missouri, in the winter of 1919 and 1920, contained and embodied all of the essential features of the device shown in Downie patent 1,511,114 (R. V. I, pp. 571-604; R. V. II, pp. 610-617) and is described exactly by most of the claims sued upon and substantially by the remaining few.

SKETCH A - LeRoy Clutter pivoted scoop structure - Patent No. 1,317,431

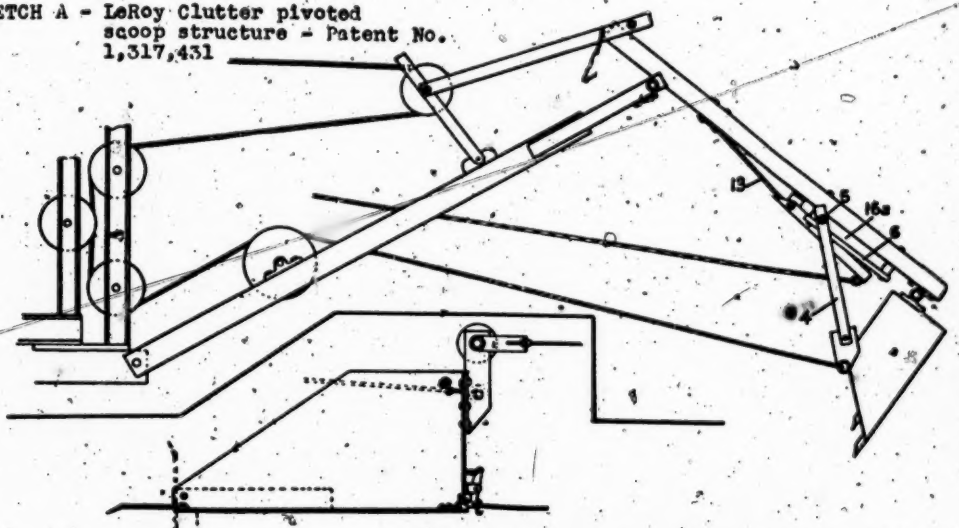

SKETCH B - Skimmer scoop of LeRoy Clutter Patent No. 1,107,899

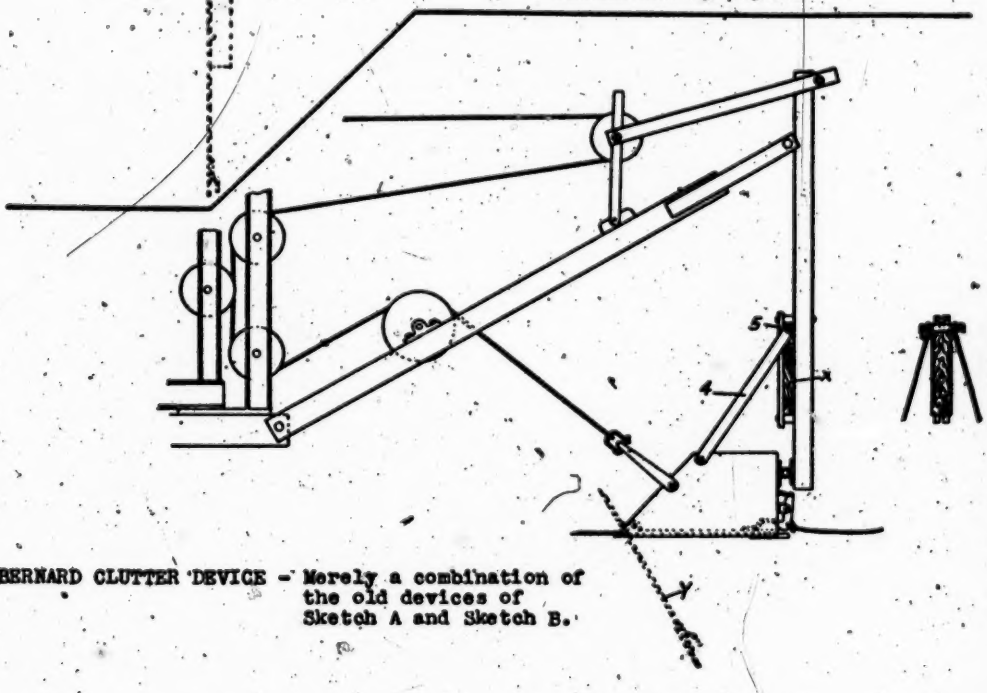

BERNARD CLUTTER DEVICE - Merely a combination of the old devices of Sketch A and Sketch B.

What Bernard R. Clutter did at Joplin, Missouri, is illustrated on page 55 of this brief. In this illustration, sketch A shows the instroke ditcher of the Clutter type then being used at Joplin by Clutter and sketch B shows the Keystone skimmer scoop which was also owned by Wallower Brothers. Sketch C shows the improved device with the skimmer scoop of sketch B substituted for the pitching scoop of sketch A.

These sketches show that the skimmer scoop was secured to the lower end of the ditcher stick partly by the pivot structure 2 of Clutter patent No. 1,317,431. They show, however, that the braces 4 of this Clutter patent structure were also mounted upon the forward upper corner of the skimmer scoop with the pin 5 of Clutter patent No. 1,317,431 disposed in the guides 6 thereof. However, it will be noted that a wooden block X is so disposed in these guides as to prevent downward movement of the pin 5 in such guides and to thereby effect a rigid mounting of the skimmer scoop above the stick. The drop-bottom of the skimmer scoop is shown in open position at Y.

Clutter further said that he conceived the idea of using a rigid drop-bottom bucket on an instroke ditching machine in about 1916 but that he did not put this idea into use at that time because he was working for the Keystone Driller Company and did not want to give this company any rights in this idea.

The witnesses offered by Respondents, in corroboration of Bernard Clutter as to this Joplin development cannot be classed as mere casual observers unacquainted with

the subject-matter in question. On the contrary, they were men directly familiar with the subject-matter and men to whom this subject-matter was of important interest.* For example, Phil Culbertson who testified (R. V. I, pp. 586-590) was a salesman of excavators for the Keystone Joplin branch, at the time he witnessed this Joplin development. W. L. Culbertson (R. V. I, pp. 590-592) was assistant manager of the Keystone Company at the Joplin branch at the time he witnessed this development. Lysle L. Hazen was superintendent of the southwestern branch of the Keystone Driller Company, located at Joplin.

In addition to these three employees of the Keystone Company, these operations by Bernard Clutter were witnessed by John Cummings (R. V. I, pp. 592-596), who was a fireman on the machine operated by Bernard Clutter and who was also engaged in drilling and in shooting the limestone encountered. He was employed by Wallower Brothers, who had the contract for the Joplin Supply Company building. Herbert H. Wallower (R. V. II, pp. 610-617) was superintendent in charge of operations on the job in question. Max A. Elsner (R. V. I, pp. 596-598) was connected with the C. A. Dieter Construction Company, who had the general contract for the construction of the Joplin Supply Company building and who had let the sub-contract to Wallower Brothers.

The employees of the Keystone Company were thor-

* National Casket Co. v. Stolts, 157 Fed. Rep., 392, 393-394 (C. C. A. 2d); Sipp Elec. & Machine Co. v. Atwood-Morrison Co., 142 Fed. Rep., 149, 153, 154 (C. C. A. 3d).

oughly familiar with the subject-matter and were, in fact, engaged daily in handling and selling the Keystone instroke ditcher and the Keystone drop-bottom skimmer scoop which were combined by Bernard Clutter to produce his device. Of course, Cummings was interested and in a position to know exactly what happened. Wallower was certainly deeply interested, because his firm had money at stake. Elsner merely offered the necessary documentary evidence to prove the amount of work done and the payment for this work, as of a certain date.

The corroborating witnesses agreed that the Bernard Clutter device operated successfully at Joplin for a period of a month or six weeks in excavating a cellar under contract. The Keystone Company then procured a job for Clutter which took him out of the country from the summer of 1920 until the summer of 1921 (Clutter R. V. I, p. 580).

CLAIM 6 OF DOWNIE PATENT NO. 1,511,114 APPLIED TO THE BERNARD CLUTTER DEVICE

a. In an excavating machine, the combination of a boom mounted for up and down movements,

b. a scoop-carrying member pivoted to the outer end of the boom at a point between the ends of said scoop-carrying member,

c. a hoisting line engaging a pulley connected pivotally to the upper end of the scoop-carrying member for controlling the up and down movements of the scoop-carrying member and boom, and in conjunction with the weight of the boom, for causing outward movements of the lower end of the scoop-carrying member,

d. a scoop attached to the lower end of said scoop-carrying member, the attachment of the scoop to the scoop-carrying member being rigid and fixed throughout the entire cycle of operation, the inward end of said scoop being open,

e. a hauling line for drawing the scoop inwardly,

f. a pivoted bottom for the scoop pivoted to the sides of the latter, the axis of movement of the bottom being arranged transversely of the scoop and located adjacent to the open end thereof,

g. and an automatically engaging latch means for normally maintaining the bottom in closed position.

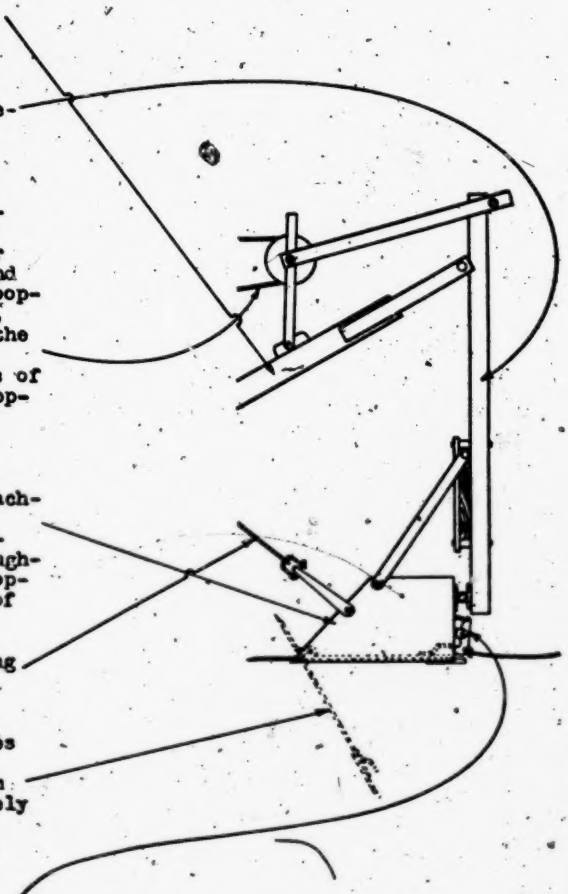

Downie, the patentee of patent 1,511,114, testified that he learned of the public use by Bernard R. Clutter at Joplin, Missouri, as early as January, 1921. This was about six months before he filed his own patent application which became patent 1,511,114. While the Clutter public use device was actually constructed and operated by "Burn" Clutter between December, 1919, and March, 1920, Downie has testified that he did not conceive his alleged invention until the summer of 1920. Even as to this date of conception he has offered no evidence other than his own statement. At any rate, even by his own statement, his conception was months subsequent to the prior use of the device used by Clutter at Joplin, Missouri. Notwithstanding the information Downie had received about the public use by Bernard R. Clutter at Joplin, Missouri, Downie proceeded to file his application for patent.

The Downie patent issued on October 7, 1924, and suit against the Byers Company being in contemplation, doubt and uneasiness as to the effect of the Joplin use was revived. The evidence shows that in the early part of 1925, Downie made a voluntary trip to Lakewood, New Jersey, to interview Bernard R. Clutter. He was accompanied by Howard Elmire, one of the salesmen of the Keystone Company. This must have been sometime prior to February 11, 1925. (Def. Ex. 95, R. V. IV, p. 1297). They talked general and unimportant matters until Downie asked Clutter to step aside out of hearing of Elmire. (Clutter, R. V. II, p. 738; Elmire, R. V. II, p. 802).

When asked to relate as near as he could what took place when he and Downie went out into the yard of his home at Lakewood on this occasion, Clutter told the following story:

"Mr. Downie informed me that he wanted to talk over some business privately and that he didn't want anyone to know anything about it except he and I. I asked him what the nature of the business was and he said it was regarding that drop-bottom ditcher scoop that I had had made out at Joplin, Missouri. He explained that they, meaning the Keystone Co., I presume, or possibly he, Rex Downie, had a patent, I should have said had taken out a patent on a drop bottom ditcher scoop, and that I apparently had made or had had made the first one at Joplin, Missouri, and that I could cooperate with them in the protection of this patent. I told Rex that if I had had the first one made and put into use, that it was my invention, and not theirs, and that I could not see where they had any right to the patent. I don't remember all that was said, however after considerable jarring, over the proposition, Rex informed me that I did not have money to go into court and fight the Keystone Driller Company, which was a fact. However, he said if there had been a wrong done, let's get together and see if we can right the wrong. I asked him in what way that could be accomplished. He said that he had a proposition to make me if I could be willing to consider it, and I asked him what it was. He said that they would sell me a new machine at half price. As this was the only opportunity that I felt that I had, to realize off of my invention, I agreed to accept it. I asked Rex if we should go into the house and draw up a contract to that effect, and he said, 'No, not now.' He said 'Now that is the ticklish part of this thing.' That it was a question as to whether or not there could be anything drawn up in writing that would be of any advantage. He also said that

any papers to show that there was a deal existing between us might serve to invalidate the patent. He said that he would find out if there was any way that they could hold me and see me later. He also told me that I would have to sign settlement in full for the machine, and that they could later issue me a credit for the half interest, and that I would have to trust entirely to his honesty to carry out their part of the deal. He asked me not to say anything to Elmire or anyone else as to what his business was down in Lakewood." (R. V. II, pp. 738, 9.)

In further explanation, Clutter said (R. V. II, p. 739) that Downie explained to him that by cooperating with them in the protection of this patent, he meant that Clutter was to keep absolutely quiet in regard to his part of the invention and that a half interest in a new Keystone excavator was to be given him in consideration for keeping quiet and also as Downie expressed it "to right the wrong if there had been a wrong done."

The full price of a Keystone excavator was about $8,240.00. Clutter's half interest was equivalent of $4,120.00. Clutter also made it clear (R. V. II, p. 740) that the reference to his part of the invention related to the development which he had made at Joplin, Missouri. He accepted Downie's proposition and verbally ordered a Keystone excavator.

This verbal arrangement was made sometime prior to February 11, 1925, since, on that date, a letter was sent by the Keystone Company to B. R. Clutter (Def. Ex. 95, R. V. IV, p. 1297), stating that the company had received a letter from Rex Downie "in which he states that he has not definitely decided on the special consid-

erations and the exact details, but he states that if you want to place your order for the shovel before he can reach final conclusion, that we are to take your order on basis of initial cash payment of $500.00 and maximum time of eighteen months for the balance."

March 16, 1925, the Keystone Company wrote Clutter enclosing bill of lading and invoice for an excavator with certain attachments. (Def. Ex. 37, R. V. III, p. 239.) The excavator was shipped to Clutter in accordance with the above deal between him and Downie. (R. V. II, p. 740.) It may be noted that $8,240.00 is the amount of the invoice.

About April 16, 1925, Downie and Elmire again went to see Clutter. This time Downie had two papers ready for Clutter's signature. (Downie, R. V. II, pp. 1025, 1026; Elmire, R. V. II, p. 802; Clutter, R. V. II, p. 742.) Downie had prepared these two papers himself at his office before going to see Clutter. One was an affidavit and the other an agreement (quoted in full hereinafter). (Downie, R. V. II, p. 1025.) Clutter signed the affidavit but Downie did not ask him to sign the agreement, although he apparently took the greater part of the day in debating with himself whether he should have it signed. (Downie, R. V. II, p. 1025; Elmire, R. V. II, p. 804.) It is quite evident from a reading of Downie's cross-examination (R. V. II, pp. 1022, 1023) that he still thought, as he said to Clutter on the occasion of his previous visit to Clutter's home with reference to executing an agreement, "No, not now * * * Now this is the ticklish part of this thing." (R. V. II, pp. 738-9.)

Clutter testified (R. V. II, p. 742) that he signed the papers and requested a copy but that Downie said "that they couldn't have any copies out and that it was a question as to whether they could ever use the papers they had or not." Clutter had no recollection of reading the papers but understood that the purpose of having him sign them was "So that I could not interfere with them in their protection of the patent on the drop-bottom ditcher scoop." He identified "them" as Rex Downie or the Keystone Driller Company. As a matter of fact, he signed the affidavit but not the agreement and Downie did not give him a copy of either. (Downie, R. V. II, p. 1022; Elmire, R. V. II, p. 804.)

Clutter afterward bought a second Keystone excavator which is referred to in some of the exhibits in this case, but it has no relation to this suppression matter.

Although the testimony shows that both the affidavit signed by Clutter (Def. Ex. 113, R. V. IV, p. 1319) and the unsigned agreement (Def. Ex. 98, R. V. IV, p. 1298), were submitted to Clutter by Downie on the same day, the affidavit is dated April 16, 1925, and the agreement bears the penciled memo. date, April 11, 1925. This difference is immaterial since the affidavit was signed at about this time and the agreement, though not signed, actually went into execution, as indicated by subsequent correspondence. The memo. date on the agreement probably indicated the date on which Downie drafted it. (Downie, R. V. II, p. 1018.)

The Affidavit Signed By Clutter.

This affidavit is an interesting document. It was prepared by Downie (R. V. II, p. 1036) after the extensive investigation which he made during the period from 1921 to the date of the affidavit. From the patent angle, it constitutes an admission by Downie of the occurrence of the Clutter public use at Joplin and is strong corroboration of the testimony of Respondents' witnesses as to the structure of the device.

However, the affidavit is shown here for its bearing on the suppression of evidence.

Defendants' Exhibit 113.

(R. V. IV, p. 1319.)

Statement.

Date April 16, 1925.

To whom it may concern;

I, Burn R. Clutter, now residing in Lakewood, N. J. was employed by the Keystone Driller Co. of Beaver Falls, Penna., from 1914 until sometime in 1919. My work with said firm was that of salesman and demonstrator, and in the course of this work I became skilled in the operation of the Keystone excavator.

In December of 1919 or January of 1920, after I had left the employ of the said Keystone Driller Co., and while I was employed by the Orange Mining Co. of Joplin, Mo., in the capacity of Keystone excavator operator I assisted in the construction of certain two drop-bottom ditcher scoops.

I operated the excavator on the excavation for the basement of the Joplin Supply Company building on Third Street, Joplin, on which job the drop bottom ditcher was tried.

The device consisted of (1) a boom pivotally mounted for hoisting and swinging, (2) an I-beam ditcher stick pivotally attached to the outer end of the boom at a point on the stick about fifteen inches below its upper end, (3) a pair of sheave stands pivotally attached to the upper surface of the boom at a point near the outer end of it and carrying a sheave, (4) a hoisting cable extending from the machine and engaging said sheave, (5) a pair of links pivotally connecting the pin of the hoisting sheave with the upper end of the ditcher stick, (6) a scoop rigidly attached to the lower end of the stick having (7) a falling bottom pivoted to the sides of the scoop at a point near the open end of the latter and near the lower edge of the sides, and (8) a hauling line extending from the machine to the scoop for drawing it toward the machine.

Elements (1) to (5) inclusive and element (8), as listed above, were precisely the regular Keystone ditcher parts as manufactured by the Keystone Driller Co., under the L. P. Clutter Patent No. 1,317,431. The new contrivance consisted in rigidly fastening a scoop body, made after the pattern of the body of the Keystone skimmer scoop, to the lower end of the stick, providing for discharge by the use of a pivoted bottom.

Two scoops were made in order that one might be always available as a standby to insure against the delay of the job which might have resulted from the necessity for repair or revision.

Both scoops were in about the same stage of development when use as ditchers was given up. Both scoops were dismantled shortly after having been used on the Joplin Supply Co. job and were converted into skimmer scoops.

Experimentation was abandoned; and so far as I was concerned this was because of the extreme care required to make the device as a whole operative, especially the latching arrangement; and be-

cause I did not conceive the advantage of the dumping bottom to be of sufficient practical worth to justify the expense of the re-design and further experimentation which would have been necessary in my opinion to make the device commercially useful.

Bernard R. Clutter.

Subscribed and sworn to before me this 16th day of April, 1925.

John L. Burdge.

An impressive thing about this affidavit is the completeness of the description of the device referred to therein as being operated by Clutter on the Joplin Supply Company building.

This established conclusively that there was nothing new about this skimmer scoop. The meticulous language of the affidavit shows that the structure used at Joplin was well understood by Downie and that the scoop used by Clutter was a copy of the Keystone skimmer scoop or a Keystone skimmer scoop itself, as is testified to by practically all of the witnesses of the operation at Joplin.

Agreement Between Burn R. Clutter and the Keystone Driller Company.

Defendants' Exhibit 98 (R. V. IV, p. 1298) reads as follows:

Memorandum.

This is to witness agreement made this day between the undersigned parties, Burn R. Clutter and the Keystone Driller Co.

1. Burn R. Clutter, for the consideration named below, hereby conveys, to the Keystone Driller Co.

all right, title or interest that he may now have or may later acquire, as inventor or co-inventor, in that certain pivoted bottom ditcher scoop contrived by himself, or by him and Herbert Wallower, and which was built at a shop in Pittsburg, Kansas and tried out on one or more Keystone excavators at Joplin, Mo., during the period of November and December, 1919, and January, February and March, 1920.

2. In consideration of the above the Keystone Driller Co. hereby conveys to Burn R. Clutter a one-fourth ownership in that certain Keystone excavator with equipment as furnished to him under contract-lease dated February 28, 1925.

3. In further consideration of above the Keystone Driller Co. hereby agrees, subject to the time limit contained in fourth paragraph hereof, to convey to Burn R. Clutter a like additional one-fourth interest in said excavator and equipment, in the event and upon the occurrence of any one of the following three contingencies, namely, (1) if and when U. S. Patent No. 1,511,114, issued Oct. 7, 1924, for "improvement in EXCAVATING MACHINES" shall have been declared by any U. S. district court, valid in claim as worded in Claim No. Six* as issued; or (2) if and when any of the claims of the said Patent No. 1,511,114 shall have been declared by any competent court, valid to the extent of securing to the owner of said patent the sole right to make and sell a machineward moving ditcher scoop having a pivoted bottom; or (3) if and when, due to action based upon the said Patent No. 1,511,114, or any other patent owned by the Keystone Driller Co., or due to any threatened action by the Keystone Driller Co. the said Company shall have enjoyed for an unin-

*An interesting thing about this matter is that Claim 6, mentioned in this agreement, was emphasized in Petitioner's briefs in the Byers case (Pl. Ex. P-76) and was especially selected as typical by the Court of Appeals in the Byers case, 44 F. (2d) 283, at page 285. It is even more interesting that Claim 6 reads flatly upon the device used by Bernard Clutter at Joplin.

terrupted period of one year the sole manufacture and sale, in the United States, of a machine ward moving ditcher scoop having a pivoted bottom.

4. It is agreed that the payment of one-fourth of the price of the machine and equipment named in second paragraph shall be suspended only until two years from date hereof, in anticipation of the possible occurrence of one of the contingencies named in the third paragraph, and that if at that time none of the contingencies named shall have occurred then the third paragraph hereof shall definitely lapse and the suspended one-fourth part of the price shall at once become due and payable in money.

Signed at....., this.....day of ....., 1925.

.....
.....

Witnesses of both signatures:

.....
.....

It is to be noted that the affidavit and the agreement are utterly inconsistent with each other, though it will be found that they had a common purpose. The one shows that Clutter had nothing to sell; the other assumes that he had something to sell for which he was to be paid some $4000.00. It is not strange that Downie was in a quandary about having the agreement signed. He compromised by not having the agreement signed and by not giving Clutter a copy of it, but by acting under it for several years.

Downie Knew, at the Time He Made This Agreement With Clutter, That Clutter Had Nothing to Sell But His Silence.

Downie admitted, under cross examination, (R. V. II, p. 1022) that he knew at the time of the execution of the affidavit and of making the agreement that Clutter had nothing to sell. He uses the following language:

> "Clutter then advised me point blank that he did not really have an application in the patent office; and I had learned from counsel in the meantime that if he had not yet applied, he had no right to apply, because the work had occurred too far before; and therefore there was no object, from my view, in having Clutter execute the agreement."

When asked whether or not Clutter wanted the agreement, (Defendants' Exhibit 98), executed, he made the following answer:

> "As I said, there was nothing that Clutter was to do that he had not already done theretofore in respect to his rights there at Joplin, if he had any; and therefore there was no reason, from our viewpoint, why he should sign it, so it was a mere matter of going ahead on our part. In other words, there was no further consideration from Clutter coming to us: it was all a matter of what we might owe Clutter on account of my original deal."
>
> "Q. You say Clutter had already done what he was to do; what was that?" "A. Execute the affidavit."
>
> "Q. Clutter had not received what he was to receive for doing that, had he?" "A. No, sir, he was to receive this quarter credit."

* * * * * * * * * * * * * *

"Q. One-quarter direct and one-quarter contingent?" "A. One outright and one contingent."

* * * * * * * * * * * * * *

"Q. He was interested in getting something for it?" "A. Yes, sir." (R. V. II, p. 1023.)

Downie says clearly that the credits, amounting to approximately $4000.00, were given Clutter for signing the affidavit. In the next breath, and in the face of his acknowledgment that he knew Clutter had no rights whatever of the nature indicated in paragraph 1 of the agreement, he says these rights, which he knew did not exist, were the consideration for the credits. The preposterous part about the matter is that Downie claims he felt obligated to give these credits of approximately $4000.00 to Clutter, in spite of the fact that Clutter actually had no rights and had misled him about this fact. Thus, Downie says:

"Q. And so, upon the basis of that understanding which you secured from him that he had something, you had told him you would give him $4000.00 for the two things; and then when you found out he had misled you, he had been evasive with you, that he had not told you the truth about his patent rights, nevertheless you were still going to give him the $4,000.00 if he signed the affidavit?" "A. The mere fact that I found I had been misled by him does not relieve me from meeting my half of the bargain." (R. V. II, p. 1027.)

Downie further testified that he recognized the contract as being in force, "as modified from time to time," for some years after 1925. (R. V. II, p. 1029.)

For the sake of brevity we have quoted only a small

part of Downie's cross-examination. The reading of the entire cross-examination would show more clearly how evasive and inconsistent he was in his attempted explanation of the purpose and effect of his deal with Clutter. (R. V. II, pp. 1017-1039.)

In furtherance of its efforts to keep this transaction secret, Keystone Company took a chattel mortgage from Clutter on this first machine (Def. Ex. 101), for $7740, showing allowance only for a cash credit of $500 under date of April 14, 1925 (Def. Ex. 99; R. V. IV, p. 1299). It was prepared on April 14, 1925, but was not filed until June 13, 1925. Rex Downie made affidavit that $7740 was due therein.

Here was the deliberate signing of a false oath for the purpose of concealing these credits which had even been embodied in the original agreement (Def. Ex. 98; R. V. IV, p. 1298), before the filing of the chattel mortgage and which had been arranged for before the machine was shipped.

Another significant link in this campaign of concealment is provided by the fact that the credit for which Downie arranged with Clutter, as early as February 11, 1925, was not entered on the books of the Keystone Company until December, 1926 (Downie, R. V. II, p. 1001). F. W. Ransom, former assistant general manager of the Keystone Company (R. V. II, pp. 769, 770), says that he talked with the treasurer of the Keystone Company, Mr. Smith, in December, 1926, at Beaver Falls, regarding Clutter's reason for withholding payment on his account and asked Smith if he knew anything about the

credits claimed by Clutter. They then called in Downie who said he had given Mr. Smith a memorandum on the matter. Smith then found the memorandum, which Ransom thought was for $1,000, and said that he had not made the credit on the books because he understood the credit was not to be made until a suit, then pending, was decided. Mr. Ransom further testified (R. V. II, p. 769) that Clutter never questioned the Keystone account but claimed he had a credit due him which they did not have on their books and repeatedly stated that Rex Downie knew about this credit that should be given him on his account.

Defendants' Exhibit 102 (R. V. IV, p. 1300) is a letter from the Keystone Driller Company, dated March 16, 1926, to B. R. Clutter, with an enclosed notice from the Peoples National Bank of Lakewood, New Jersey, showing the default by Clutter on a note for $425 and interest. When we couple this default with the Keystone letter to Clutter of February 11, 1925 (Def. Ex. 95; R. V. IV, p. 1297), and with the statement by Ransom that Clutter was repeatedly claiming that he was entitled to credits on his account and that Downie would know about these credits, it is absurd for Petitioner to claim that Smith, who was treasurer of the company, and who was in the same office with Downie, general manager of the company, could have mislaid this memorandum of credit, except by deliberate intent. It is obvious that Ransom gives the correct explanation when he says that Smith "understood the credit was not to be made until the suit then pending was decided."

Defendants' Exhibit 103 (R. V. IV, p. 1301), a letter from the Keystone Company, dated January 15, 1927, to Clutter, shows a cancellation of four of Clutter's notes, "due respectively in September, October, November and December of 1925, the amount of all being $1700." This letter also says, "It is the writer's understanding that, in case of the successful issue of our litigation, there will be a further credit. This, of course, cannot be given until the cases have been decided."

As a matter of fact, there were other credits due Clutter at this time. The agreement (Def. Ex. 98; R. V. IV, p. 1298) provided for an immediate credit of one-fourth the value of the machine. Taking the purchase price of the machine, minus the attachments which were not received by Clutter, the credit due him was $1904. This device of crediting Clutter with $1700, instead of $1904, was clearly for the purpose of concealing the relation between this book-keeping entry and the agreement. Judge Hahn makes the following extremely pertinent comment upon this discrepancy:

> "There was method in not entering upon the books of the company this particular amount which might later suggest investigation which would uncover the Downie-Clutter transaction with reference to the excavator. Smith, the treasurer, did not testify upon this subject, although he was at the place of business of the Keystone Driller Company and was available." (Opinion, R. V. II, p. 1093.)

All of these bits of evidence converge and dovetail to show conclusively that the Keystone Company, under the guidance of Downie, was systemmatically endeavoring to conceal all evidence of this transaction with Clutter.

Agreement, Defendants' Exhibit 98, Remained in Force Several Years.

Under cross-examination, Downie testified (R. V. II, p. 1029) that the agreement remained in force for some years after 1925 "as modified from time to time." He could not deny this, because he engaged in extensive correspondence with Clutter. This correspondence tells the story clearly.

Repossession of Machine and Substitution of Cash for Credit Consideration of Agreement, Defendants' Exhibit 98.

Clutter became involved in financial difficulties and was not able to pay the Keystone Company much after March 16, 1926. (Def. Ex. 102; R. V. II, p. 743.)

Clutter testified (R. V. II, p. 745) that Downie and Howard Elmire again came down to see him and told him they would have to take the machine back unless he could raise the money immediately.

A new agreement was made between Keystone and Clutter, whereby the machine was to be repossessed by Keystone, and Clutter given, in lieu of his credits on the machine, a cash consideration. This cash consideration, however, was to be at least partially contingent upon the outcome of litigation, as set forth in paragraph 3 of the original agreement, and with paragraph 4 of the agreement, as modified to extend the time limit therein to the end of 1928, instead of its original termination date of April 11, 1927. (Def. Ex. 40; R. V. III, p. 246.)

This new agreement is admitted by Petitioner and established by Def. Ex. 39 (R. V. III, p. 244). However, Clutter's version of the interview which he had with Downie and which brought about this new arrangement is important, because it indicates that Clutter threatened Downie in such terms that, had Downie been innocent of wrong-doing, he would have immediately terminated all negotiations with Clutter, particularly since he had long known that Clutter had nothing to sell.

> "Q. Will you relate as nearly as you can the conversation you had with Mr. Rex Downie on this occasion near Roseland, N. J.?" "A. Rex informed me that they would have to take the machine back unless I could raise the money immediately, or a portion of it. I informed him that if he took the machine away from me that it meant that I would lose anything that I might realize from the patent on the drop-bottom ditcher scoop, and that if he did take the machine away that it was not going to do him any good. He said that he did not want me to feel that way about it, and I informed him that those were the facts and he could take it or leave it, and that eventually I could pay him every cent that I owed the company for that machine. He then offered to substitute a cash proposition instead of the credit proposition that I was formerly to have on the machine. His proposition was that they pay me half the amount of the anticipated credit in cash." (Clutter, R. V. II, p. 745.)

Downie's testimony (R. V. II, pp. 1003, 1004) about this interview agrees with that of Clutter in most important respects. He sought, however, to leave the impression that he was highly independent with Clutter. In fact, he said that he told Clutter in 1927 "that for all of

me or us he could put anything and everything he knew in as many newspapers as he liked." (R. V. II, p. 1004.)

The old Spanish proverb, "What you do, shouts so loud that I can't hear what you say," is directly applicable here.

Knowing, by his own admission, that Clutter had nothing to sell, he nevertheless agreed to give Clutter a cash consideration as a substitute for the credit on the machine and also extended the time limit of paragraph 4 of the agreement for about a year and eight months. (Downie, R. V. II, p. 1005.)

Downie Continued Attempt to Placate Clutter After Repossession of Machine.

The Keystone Company left the first excavator purchased by Clutter in his possession until shortly prior to August 11, 1927 (Pl. Ex. 75, physical exhibit). At the time of repossessing this excavator ten notes, of $425.00 each, were overdue, after the application of the credit of $1700 representing part of the first installment of the consideration due him. Downie was certainly very lenient in this respect.

January 9, 1928, Clutter wrote to the Keystone Company, attention Mr. Rex Downie (Def. Ex. 104; R. V. IV, p. 1303), that he was in dire need of funds. He called attention to the agreement by Downie to substitute "half the amount that was to be allowed on the first machine" and asked for help. On the back of the first page of this

letter, in Downie's handwriting (Downie, R. V. II, p. 1019) appears the following notation:

> "This goes
>
> This may refer to understanding that if K. D. should repossess both machines, and hence could not fulfill Par. 2 of contract by a machine credit, they would reduce the amount of Par. 2 by ½ and pay (if and when due) **in cash.** At least this was writer's intention and recollection of agreement (verbal) in regard to the point. R. D. Dec. 3, 1928." (Boldface type Downie's.)

This letter was acknowledged by Downie on January 18, 1928 (Def. Ex. 105; R. V. IV, p. 1309). Downie recognizes that the agreement is still in force and says, "as you know we have been extending the time within which the contingency may occur which would render the second installment or portion of the purchase price of your first machine due. * * * we certainly will fullfill the deal we made with you." And he is very apologetic for inability to do anything for Clutter at that time.

February 6, 1928, Clutter again writes to Downie, saying in part:

> "Now Rex the fact of the matter is that Bankrupt proceedings is pressing me very close right at the present time and this would be a nasty claim to try to explain in the Supreme Court which of course bankrupt proceedings comes under it would get a lot of publicity that we do not want in connection with this case. I am willing to make any concession that is within reason to get the thing cleaned up before anything happens which is likely very soon. Can you come out and see what we can do?" (Def. Ex. 106; R. V. IV, p. 1310).

That this letter was in the nature of a threat is recognized by Downie in his reply of February 16, 1928 (Def. Ex. 107; R. V. IV, p. 1311). Here was another opportunity for Downie and the Keystone Company to take a strong stand with Clutter on his demand for money. Instead, they sent him a check for $476 "leaving the second half of it, $476.00 cash, contingent upon the development of the ditcher situation."

Downie also suggests in this letter that there is nothing in this transaction that would need to be listed by Clutter among his assets in case of bankruptcy.

November 15, 1928, Clutter again wrote to Downie (Def. Ex. 109; R. V. IV, p. 1313) saying that he needed money very badly and asking that a check be mailed to him for the balance.

November 23, 1928, Downie replied (Def. Ex. 38; R. V. III, p. 243) that "the other half of the contingent cash credit was not to become payable until and unless our case should be satisfactorily decided by the end of 1928. No decision has been made as yet. The case drags for various reasons." He then goes on to argue that no money is due and ends by offering to come down and have "another shore dinner the next time we are in Jersey, and we will stick Elmire for the smokes."

November 28, 1928, Clutter again wrote to Downie (Def. Ex. 110; R. V. IV, p. 1313) explaining his view of the situation. December 4, 1928, Downie replied, on behalf of the Keystone Company (Def. Ex. 39; R. V. III,

p. 244), arguing his version of the matter in friendly and placating fashion, and saying:

> "The status of the affair at this point is that if any one of the three contingencies involved occurs before the end of 1928 there will be a payment of $476.00 due you from the Company; but your failure to have paid your account out causes Mr. Smith to object to the payment of this final amount even if it should become due, as it is common practice to offset one debt against another." (Next to last paragraph, Keystone letter; Def. Ex. 39; R. V. III, p. 244.)

December 13, 1928, Clutter wrote to Downie (Def. Ex. 111; R. V. IV, p. 1315) saying among other things that he was the original inventor and that this had been admitted by Downie in his voluntary act of coming to Clutter for settlement without any demand or request on Clutter's part. He requested that Downie "take a definite stand one way or the other, one that cannot possibly be misconstrued as meaning anything except just what you intend to do." December 17, 1928, Downie replied, on behalf of the Keystone Company (Def. Ex. 40; R. V. III, p. 246) saying, "We made a contract with you, and we believe that that contract has been or is being correctly and properly discharged."

The decree in the Byers case was made January 31, 1929. As shown by the correspondence, Downie continued up until that time his attempt to placate Clutter and keep him quiet, and it was not until about that time that the payment of any further consideration to Clutter was definitely refused.

Here was a scheme conceived and carefully followed

for several years. Its initial tangible result was a decision in the Byers case based upon fraud. But this was merely the first step. This decision, thus fraudulently obtained, was to be used as a weapon for clubbing the other alleged infringers into submission.

Petitioner Went Into the Toledo Court Against These Respondents With the Fraudulently Obtained Adjudication.

Final decree in the Byers case was entered January 31, 1929. The bill of complaint in these cases was filed February 9, 1929, alleging infringement of the first Downie patent, together with the Clutter patent and the second Downie patent. A copy of the final decree in the Byers case was filed with the bill of complaint, together with a copy of the Opinion of Judge Jones. At the same time, Petitioner filed a motion for preliminary injunction, and an order to show cause was entered by Judge Hahn. The motion was denied on June 6, 1929, though Respondents were each required to post a bond in the sum of $15,000 for the payment of all profits or damages that might ultimately be decreed against them respectively.

Thus, the Petitioner appeared against these Respondents with a motion for preliminary injunction, urging a prior adjudication which had been obtained by the fraudulent suppression of evidence.

Urging of the Fraudulently Obtained Byers Adjudication in These Suits Was Unclean Hands.

It is immaterial when the agreement between Petitioner and Bernard Clutter ceased to be in force. It is enough that it enabled Petitioner to fraudulently obtain the decision in the Byers case.

A more important thing is that Petitioner came into these present suits urging this decision, which it knew to be fraudulently obtained, and using it to restrict Respondents' right to independent consideration of the patents sued upon. That it did restrict Respondents' rights cannot be denied.

The decisions in the Byers case hung like a cloud over these cases. Judge Hahn's decision shows that he even refused to pass upon certain matters and he applied the rule that the decision of the Court of Appeals must be followed, except as to new matter not merely cumulative.

Obviously, a suit to enforce a fraudulently obtained decree of validity is as inequitable as a suit to enforce a fraudulently obtained contract. Otherwise, it would be safer to defraud a court than an individual. As a matter of fact, it is more iniquitous and, necessarily so, if the authority and integrity of the courts are to be maintained.

In Weegham v. Killifer, 215 F. R. 168, at page 173, the plaintiff was denied relief on the ground of "unclean hands" because the "actions and conduct of the plaintiffs in procuring the contract, upon which their right to relief is and must be founded, do not square with"

this fundamental doctrine of "Unclean Hands." In these cases, the Petitioner must be denied relief on the ground that its fraudulent conduct, first, relating directly to a patent sued upon and, second, in procuring the adjudication of validity in the Byers case and urging this fraudulently procured adjudication upon which they seek, in part, to base its right to relief, do not square with this fundamental doctrine.

In the Weegham case, the fraud was only on the defendant. In the present cases, the fraud was on the Court of Appeals, the Cleveland Court and the Toledo Court, as well as on the Respondents.

Effect of Suppression of Evidence Not Exhausted With Decision in the Byers Case.

The Petitioner urges that the suppression of evidence was exhausted with the decision in the Byers case, and attempts to show that this suppression of evidence was not connected with these present suits. However, the evidence shows that Petitioner kept the facts of this alleged prior use a closely guarded secret. (Siggers, R. V. II, p. 1055).

In its briefs before the District Court and the Court of Appeals in the Byers case, Petitioner told the Court that "Nobody before Downie had conceived how a dump bottom could be mounted and operated in an inward arc machine, * * *" (R. V. II, pp. 1064-65). The brief used before the District Court in the Byers case with these statements therein was also used, with supplementary typewritten sections, on the motions for pre-

liminary injunctions in the instant cases. It should be remembered that these things were done, in spite of the fact that Petitioner and its counsel had full knowledge of the prior conception and use by Bernard Clutter.

Even after Respondents had taken the Clutter deposition showing this fraud, Petitioner refused to allow Respondents to inspect the documents in its possession relating to this matter and forced the Respondents to file a motion to compel the production of documents. This motion was brought several months prior to the trial of these cases, and at the hearing of this motion on January 3, 1931, Respondents offered an affidavit of the patentee, Downie, which contained several misstatements of fact relating to this matter in an attempt to influence the District Judge against granting the motion of Respondents. The District Judge denied Respondents' motion to produce the documents but held that all of the documents should be produced at the trial. In his Opinion the District Judge comments upon the false statements in the affidavit of Downie (Downie affidavit, Defendants' Exhibit 129, R. V. IV, p. 1324).

The Circuit Court of Appeals of the 6th Circuit refutes the argument of Petitioner that the effect of the suppression of evidence was exhausted in the Byers case, stating as follows:

> "It is urged that even if the plaintiff wrongfully suppressed evidence, the effect of such suppression was exhausted with the decision of the Byers Case, and thereafter the opportunities to secure such evidence and the relationship of the parties were the same as if no such acts had been performed. Hence,

it is said, the wrongful acts, if any, were wholly disconnected with the present controversies and without that direct relation to them which is necessary to constitute a bar. * * * *

"But the necessary connection is not here missing. As long as it was thought desirable, in order to secure an adjudication upon the patent, the hope of reward for silence was held before Clutter. This was the act of the plaintiff as much as of Downie, its officer and moving spirit. The only possible effect of such conduct was to suppress Clutter's testimony, or, if the facts came to the knowledge of the defendant, to make him an adverse or unwilling witness. When the adjudication had been obtained, the plaintiff brought the present actions seeking by motion for an interlocutory injunction to avail itself of the advantages so obtained. Perhaps the necessary connection would have been lacking had the plaintiff elected to treat the patent as unadjudicated, or had based its action only upon the other patents in suit. This we need not decide. It is enough that neither of these courses was pursued, and that the wrongful conduct was in regard to, and directly connected with, one of the matters in litigation, the patent, not simply as a patent, but as an adjudicated one." (62 Federal Reporter, 2d Series, p. 48, at p. 50).

In the Circuit Court of Appeals the Petitioner made the contention that neither in the Byers case nor in the present cases was there any obligation upon it to make disclosures of those possible prior uses which might effect the validity of the patents which it owned. To this argument the Court of Appeals stated as follows:

"This is true; but there was an obligation, in all righteousness and good conscience, not to do that which was done—not to build up a defense against the supposed prior use by buying an affidavit phrased as the plaintiff wished it to be phrased, and

possibly not in strict accord with the facts, by purchasing Clutter's silence, or at least making him an adverse witness for others, and by continuing the effectiveness of this course of action by making future gain contingent upon a favorable result of the pending action until the very advantage which it was intended should be obtained was at last secured.

"Under the above-stated principles we are of the opinion that the plaintiff should have been denied relief in a court of equity." (62 F. R. 2nd p. 48 at p. 50).

The Court then dismissed the Petitioner's suits herein on the grounds of "unclean hands."

Respectfully submitted,

EDWIN P. CORBETT,
LLOYD T. WILLIAMS,
EDWARD L. REED,
JOHN J. MAHONEY,
Counsel for Respondents.

WADE H. ELLIS,
CHALLEN B. ELLIS,
Of Counsel.

FILE COPY

IN THE

Supreme Court of the United States

OCTOBER TERM, 1933.

KEYSTONE DRILLER COMPANY,
Petitioner,
vs.
GENERAL EXCAVATOR COMPANY,
Respondent.
No. 84.

KEYSTONE DRILLER COMPANY,
Petitioner,
vs.
GENERAL EXCAVATOR COMPANY,
Respondent.
No. 85.

KEYSTONE DRILLER COMPANY,
Petitioner,
vs.
THE OSGOOD COMPANY,
Respondent.
No. 86.

KEYSTONE DRILLER COMPANY,
Petitioner,
vs.
THE OSGOOD COMPANY,
Respondent.
No. 87.

MOTION TO RECALL AND CORRECT MANDATES, AND BRIEF IN SUPPORT THEREOF.

EDWIN P. CORBETT,
LLOYD T. WILLIAMS,
EDWARD L. REED,
JOHN J. MAHONEY,
Counsel for Respondents.

WADE H. ELLIS,
CHALLEN B. ELLIS,
Of Counsel.

TOOTHAKER & RODENFELS, Law Printers, Columbus, Ohio.

INDEX.

Motion 1
Brief 3

Table of Cases.

Bein v. Heath, 6 How. 228; 12 L. Ed. 416..... 7
Reinman v. City of Little Rock, 237 U. S. 171, 59 L. Ed., 900..... 6
Weeghman v. Killifer, 215 F. 289 (C. C. A. 6th)..... 7
California Fig v. Stearns, 73 F. 812 (C. C. A. 6th) (Approved by the Supreme Court in Worden v. California Fig Co., 187 U. S. 516)..... 7
Carmen v. Fox Film Corp., 269 F. 928 (C. C. A. 2nd). 7
Deweese v. Reinhard, 165 U. S. 386, 390, 17 S. Ct. 340, 341; 41 L. Ed., 757..... 7
Freeman on Judgments (Fifth Edition), Sec. 760, page 1602 6
Foss v. People's Gaslight & Coke Co., 293 Ill., 94, 127 N. E. 347..... 6
General Excavator Co. v. Keystone Driller Co., 62 F. (2d) 48. On rehearing 64 F. (2d) 39..... 3
Gerosa v. Apco Mfg. Co., (C. C. A. 1st) 299 F. 19.... 7

Index.

Keystone Driller Co. v. General Excavator Co. et al., 78 U. S. 202 ..... 2, 3

Lake St. El. R. Co. v. Ziegler, 99 F. R. 114 5

Manhattan Medicine Co. v. Wood, 108 U. S. 218; 27 L. Ed. 706 7

Memphis Keeley Institute v. Leslie E. Keeley Co., 155 F. 964 (C. C. A. 6th) 7

Michigan Pipe v. Fremont Ditch, 111 F. 284 (C. C. A. 8th) 7

Pope v. Gormully, 144 U. S. 224, 236, 237; 36 L. Ed. 414 7

Primeau v. Granfield, 193 F. 911 (C. C. A. 2nd) 7

Stone & McCarrick Inc. v. Dugan Piano Co., et al. C. C. A. 5th) 220 F. 837 7

Wheeler v. Sage, 1 Wall. 518; 68 U. S. 518; 17 L. Ed. 646 7

IN THE

Supreme Court of the United States

OCTOBER TERM, 1933.

KEYSTONE DRILLER COMPANY, Petitioner,
vs.
GENERAL EXCAVATOR COMPANY, Respondent. } No. 34.

KEYSTONE DRILLER COMPANY, Petitioner,
vs.
GENERAL EXCAVATOR COMPANY, Respondent. } No. 35.

KEYSTONE DRILLER COMPANY, Petitioner,
vs.
THE OSGOOD COMPANY, Respondent. } No. 36.

KEYSTONE DRILLER COMPANY, Petitioner,
vs.
THE OSGOOD COMPANY, Respondent. } No. 37.

MOTION TO RECALL AND CORRECT MANDATES.

To the Honorable Charles Evans Hughes, Chief Justice of the United States, and the Associate Justices of the Supreme Court of the United States:

Now come the respondents in the above entitled causes, by their attorneys, and move this Honorable Court to recall the mandates issued herein on the 5th day of

January, 1934, to the Honorable Judges of the District Court of the United States for the Northern District of Ohio, because they do not conform to the Opinion rendered by this Court on December 4, 1933,* in that they direct dismissal of the bills of complaint "without prejudice", whereas the decision of this Court was that because of "unclean hands", complainant, Keystone Driller Company, was not entitled to any relief in equity, which means "with prejudice". Respondents therefore respectfully submit that the mandates should have directed the dismissal of the bills of complaint generally, or "without prejudice to suits at law", but no more.

Wherefore, respondents pray that said mandates be recalled and amended in this respect, and then be returned to the District Court of the United States for the Northern District of Ohio, for execution.

Respectfully submitted,

EDWIN P. CORBETT,
LLOYD T. WILLIAMS,
EDWARD L. REED,
JOHN J. MAHONEY,
Counsel for Respondents.

WADE H. ELLIS,
CHALLEN B. ELLIS,
Of Counsel.

*Keystone Driller Co. v. General Excavator Co. et al., 78 U. S. 202, (Law Ed. advance Opinions).

IN THE SUPREME COURT OF THE UNITED STATES.

OCTOBER TERM, 1933.

KEYSTONE DRILLER COMPANY, Petitioner, vs. GENERAL EXCAVATOR COMPANY, Respondent. — No. 34.

KEYSTONE DRILLER COMPANY, Petitioner, vs. GENERAL EXCAVATOR COMPANY, Respondent. — No. 35.

KEYSTONE DRILLER COMPANY, Petitioner, vs. THE OSGOOD COMPANY, Respondent. — No. 36.

KEYSTONE DRILLER COMPANY, Petitioner, vs. THE OSGOOD COMPANY, Respondent. — No. 37.

BRIEF IN SUPPORT OF MOTION TO RECALL AND CORRECT MANDATES.

On December 4, 1933,[1] this Court affirmed the decision of the Circuit Court of Appeals for the Sixth Circuit,[2] in dismissing the bills of complaint in the above en-

[1] Keystone Driller Co. v. General Excavator Co. et al., 78 U. S. 202, (Law Ed. advance Opinions).

[2] General Excavator Co. v. Keystone Driller Co., 62 F. (2d) 48. On rehearing, 64 F. (2d) 39.

titled causes, because the petitioner, Keystone Driller Company, did not come into equity with "clean hands".

On January 5, 1934, this Court issued mandates to the Honorable Judges of the District Court for the Northern District of Ohio in the above entitled causes. The decrees of the United States Circuit Court of Appeals for the Sixth Circuit having been affirmed, this Court copied into its mandates the said decrees of the said United States Circuit Court of Appeals for the Sixth Circuit which read as follows:

> "This cause came on to be heard on the transcript of the record from the District Court of the United States for the Northern District of Ohio, and was argued by counsel.
>
> On consideration whereof, It is now here ordered, adjudged and decreed by this Court that the decree of the said District Court in this cause be and the same is hereby reversed and the cause remanded with instructions to dismiss bill of complaint without prejudice. Costs are taxed against the Keystone Driller Company."

It is submitted that the portions of the mandates which recite the decrees of the Circuit Court of Appeals, directing the dismissal of the bills of complaint "without prejudice", are incorrect, and are not in conformity with the Opinion of this Court, rendered December 4, 1933.

The Opinion of this Court and the Opinions of the Circuit Court of Appeals for the Sixth Circuit, which the Opinion of this Court affirmed, were reached after a full hearing of the above entitled causes upon the merits, and

decided that the petitioner, the Keystone Driller Company, was not entitled to any relief in equity with respect to any cause of action in these cases.

Under such circumstances, the decrees of the Circuit Court of Appeals and the mandates issued by this Honorable Court on January 5, 1934 should have directed merely the dismissal of the bills of complaint, omitting the words "without prejudice", or stating that the dismissal of the bills of complaint to be "without prejudice to suits at law", but no more.

In Lake St. El. R. Co. v. Ziegler, 99 F. R. 114, at page 125, the Circuit Court of Appeals for the Seventh Circuit had before it a decree of a lower court dismissing a bill "without prejudice" where there had been a full hearing upon the merits. The Court reversed the lower court, stating as follows:

> "This conclusion brings us to the questions presented upon the merits of the case. We are not advised by the records of the considerations which led the court below to dismiss the bill without prejudice to the right of the complainant to assert, in the foreclosure suit brought by one of the trustees to foreclose the trust deed, by answer or cross bill, the matters alleged in the present bill. It is manifest that neither party desired such disposition of the case, since both have appealed from the decree. **Both parties had presented to the court, by pleadings and by proofs, their respective claims, and a full hearing was had. There would seem to be no good reason to remand the parties against the wishes of each to further litigation, or why the matter in dispute should not have here final determination upon the merits.**" (Boldface ours.)

In Freeman on Judgments, (Fifth Edition), Sec. 760, page 1602, at page 1604, it is stated:

> "A decree dismissing a bill for want of equity is a final and conclusive adjudication, and bars a subsequent suit in equity though not necessarily an action at law."

This Court, in Reinman v. City of Little Rock, 237 U. S. 171, 59 L. Ed. 900, at page 904, stated as follows:

> "But it seems that in the practice of the courts of Arkansas, as elsewhere, the expression 'dismissed for want of equity' is employed to indicate a decision upon the merits, as distinguished from one based upon a formal defect or default; and that it applies as well where on final hearing it is found that the averments of the complaint are not true in fact, as where those averments do not upon their face show a sufficient basis of fact for the granting of the relief sought."

In Foss v. People's Gaslight & Coke Co., 293 Ill. 94, 127 N. E. 347, at page 349, the court held:

> "Laches is a defense which may be taken advantage of by demurrer, if it appears on the face of the bill, or a defendant may claim the benefit of it by his answer. In this case the laches appeared on the face of the bill, and the general demurrer went to the merits of that defense. The court sustained the defense and dismissed the bill on the merits for want of equity. As in the case of the Marie Church, if the defendant had answered, and the bill had been dismissed after a hearing, in which the facts alleged were proved, it would not be thought that the decision was not on the merits."
>
> (Decree below, dismissing bill for want of equity, affirmed).

In cases where the maxim of "unclean hands" has been held to apply, the courts have uniformly decreed the dismissal of the bills of complaint generally, or sometimes "without prejudice to actions at law", but no more. This practice, in the Federal Courts, is illustrated by the following cases:

Deweese v. Reinhard, 165 U. S. 386, 390, 17 S. Ct. 340, 341; 41 L. Ed. 757.
Bein v. Heath, 6 How. 228; 12 L. Ed. 416.
Manhattan Medicine Co. v. Wood, 108 U. S. 218; 27 L. Ed. 706.
Wheeler v. Sage, 1 Wall, 518; 68 U. S. 518; 17 L. Ed. 646.
Pope v. Gormully, 144 U. S. 224, 236, 237; 36 L. Ed. 414.
Weeghman v. Killifer, 215 F. 289, (C. C. A. 6th).
California Fig. v. Stearns, 73 F. 812 (C. C. A. 6th) (approved by the Supreme Court in Worden v. California Fig. Co., 187 U. S. 516).
Memphis Keeley Institute v. Leslie E. Keeley Co., 155 F. 964 (C. C. A. 6th).
Carmen v. Fox Film Corp., 269 F. 928 (C. C. A. 2nd).
Primeau v. Granfield, 193 F. 911 (C. C. A. 2nd).
Michigan Pipe v. Fremont Ditch, 111 F. 284 (C. C. A. 8th).
Gerosa v. Apco Mfg. Co. (C. C. A. 1st) 299 F. 19.
Stone & McCarrick Inc. v. Dugan Piano Co., et al. (C. C. A. 5th) 220 F. 837.

A dismissal "without prejudice" leaves the parties free to file suits in equity. The entry of such a decree in this case would work a great injustice on the respondents, because it would enable the petitioner, the Keystone Driller Company, to escape from the consequences

of its inequitable conduct by filing new bills of complaint in equity to obtain equitable relief, to which this Court in its Opinion, dated December 4, 1933, held it was not entitled. This, of course, was not the intention of this Honorable Court.

The decision of this Court was on the merits, and therefore "with prejudice" against the petitioner, the Keystone Driller Company. These respondents have spent many thousands of dollars in defending these suits. The prior adjudication in the Byers case was obtained by fraud on the part of petitioner, and was fraudulently used by petitioner against these respondents. These respondents are clearly entitled to have the benefit of the decision of this Court in its favor, and should not be compelled by an error in the mandates to contest, at great expense, the same questions all over again.

The decree of the Circuit Court of Appeals dismissing the bills of complaint herein "without prejudice" was undoubtedly due to inadvertence and mistake, and is not in conformity with its own Opinions, denying equitable relief to the petitioner, nor with the Opinion of this court, rendered December 4, 1933.

For the above reasons, it is therefore respectfully submitted that the mandates issued by this Court in the above entitled causes on January 5, 1934, should be recalled, and corrected by directing the dismissal of the

bills of complaint generally, or "without prejudice to suits at law", but no more.

Respectfully submitted,

EDWIN P. CORBETT,
LLOYD T. WILLIAMS,
EDWARD L. REED,
JOHN J. MAHONEY,
Counsel for Respondents.

WADE H. ELLIS,
CHALLEN B. ELLIS,
Of Counsel.

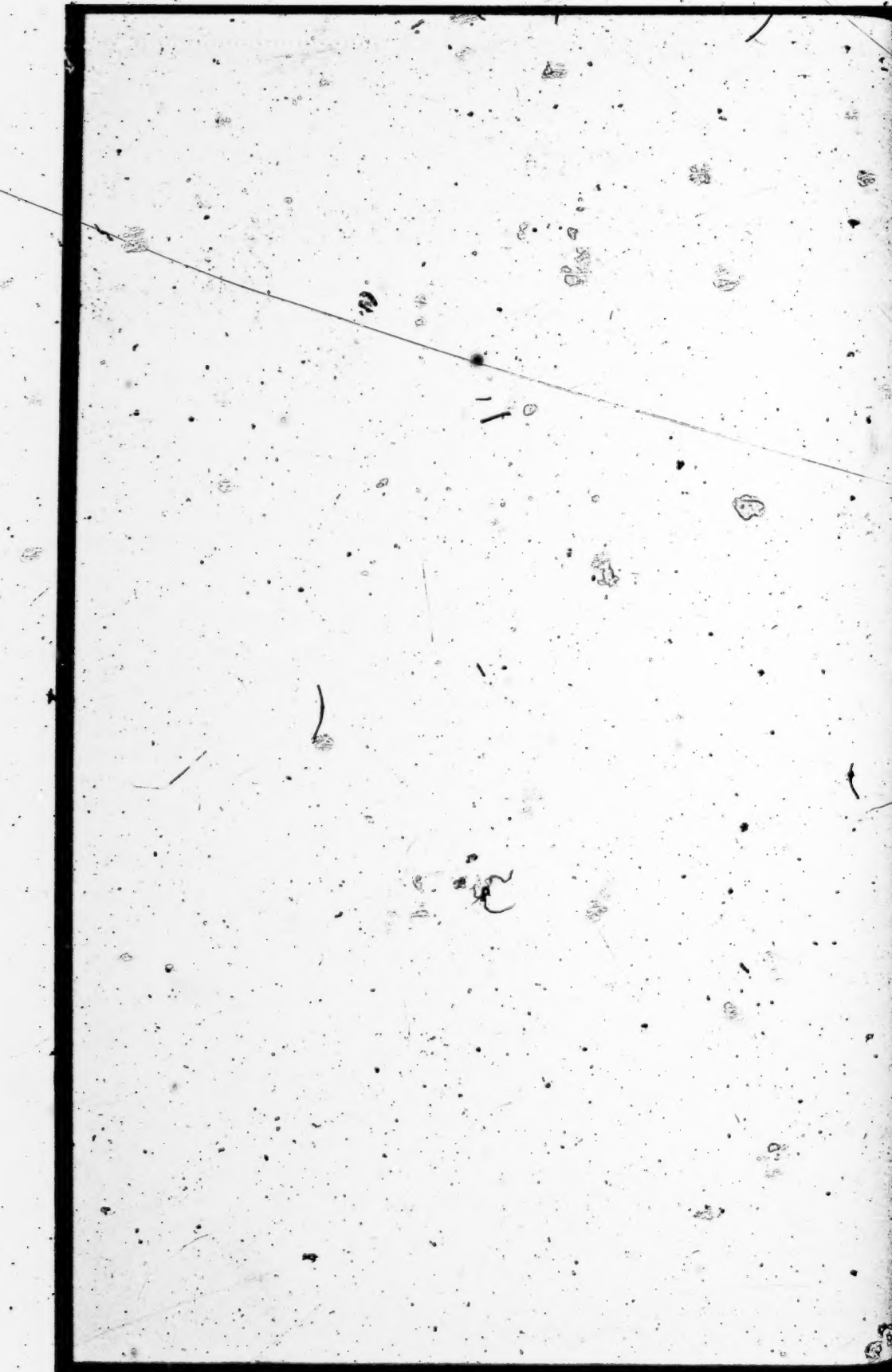

INDEX.

Table of Cases.

Bank of Commerce, et al. v. State of Tennessee, 163 U. S. 416, 41 L. Ed. 211 2

Conley v. United States, 59 F. (2d) 929, 936 4

Gantly v. Ewing, 3 How. 707, 717, 11 L. Ed. 794, 798. 2

Hubbard v. Tod, 171 U. S. 474, 494, 43 L. Ed., 246, 253 4

Kosak v. United States, 54 F. (2d) 72 3

Story v. Livington, 13 Pet. 359, 10 L. Ed. 200 3

The Board of Supervisors v. J. W. Kennicott, et al., 94 U. S. 499, 24 L. Ed. 260 3

The Stephen Morgan v. Good, 94 U. S. 599, 24 L. Ed. 266 3

Unted States v. Reading Company, et al., 228 U. S. 158, 57 L. Ed. 779 2

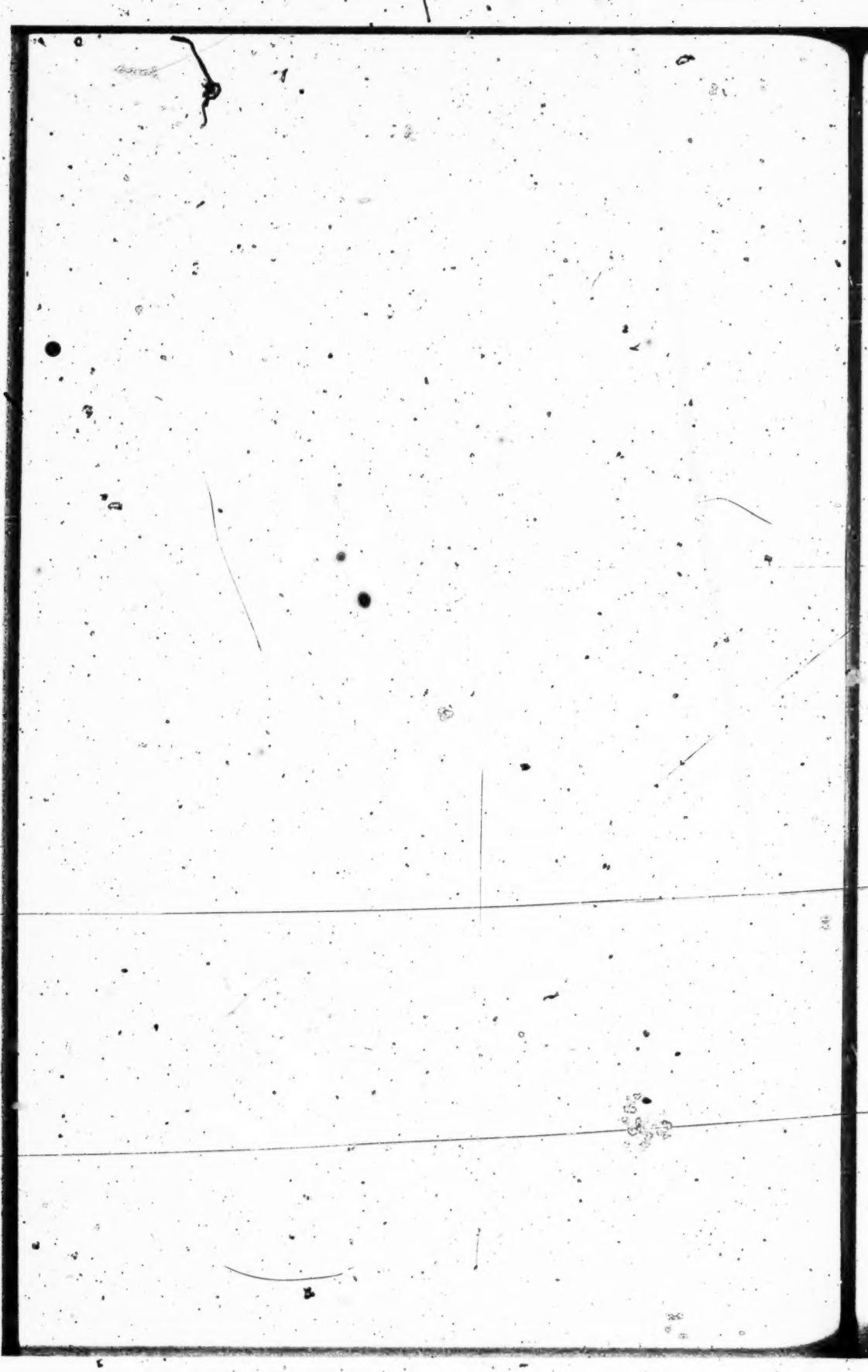

IN THE

Supreme Court of the United States

OCTOBER TERM, 1933.

KEYSTONE DRILLER COMPANY,
Petitioner,
vs.
GENERAL EXCAVATOR COMPANY,
Respondent.
No. 34.

KEYSTONE DRILLER COMPANY,
Petitioner,
vs.
GENERAL EXCAVATOR COMPANY,
Respondent.
No. 35.

KEYSTONE DRILLER COMPANY,
Petitioner,
vs.
THE OSGOOD COMPANY,
Respondent.
No. 36.

KEYSTONE DRILLER COMPANY,
Petitioner,
vs.
THE OSGOOD COMPANY,
Respondent.
No. 37.

REPLY BRIEF IN SUPPORT OF MOTION TO RECALL AND CORRECT MANDATES.

Status: The decrees of the Circuit Court of Appeals were suspended by that Court and never issued as mandates to the District Court for the Northern District of

Ohio. The only mandates which have issued to the District Court were those mandates issued by this Court on January 5, 1934. The mandates of this Court were received by the District Court on or about January 9, 1934.

No decrees have been entered by the District Court. The entry of such decrees is being postponed pending decision of the Court of Appeals upon a petition for mandates as to costs in that Court.

The Motion to Recall and Correct the Mandates should be granted for the following reasons:

This motion cannot be classed as a petition for rehearing as suggested by the petitioner. It is brought within the same term in which the mandates have been issued by this Court. The decrees have not been entered by the District Court. Every appellate tribunal has power to recall and correct its mandates to conform to what was actually decided. A motion for recall and correction is the proper procedure.

Bank of Commerce, et al. v. State of Tennessee, 163 U. S. 416, 41 L. Ed. 211.

United States v. Reading Company, et al., 228 U. S. 158, 57 L. Ed. 779.

The case of Gantly v. Ewing, 3 How. 707, 717, 11 L. Ed. 794, 798, has no relation whatever to this situation. A request for recall and correction of mandates is not an act directly prohibited. It is an act that is directly permitted and an act long approved by the decision of this Court as the proper procedure when the circumstances warrant it.

A suggestion is made that, because the concluding paragraph of the respondents' brief before this Court requested that the decrees of the Circuit Court of Appeals should be affirmed, these respondents are now precluded from asking for a correction of the mandates of this Court. It is clear, however, that this single sentence in respondents' brief cannot bar respondents from obtaining a proper correction of a mistake in the mandates. The briefs before this Court show that respondents were asking for an affirmance of the decision of the Court of Appeals as a whole. The decrees of the Court of Appeals cannot be detached from the Opinions upon which they are supposed to be founded. This Court has many times held that decrees are to be construed in connection with the Opinions and the record for the purpose of carrying into effect the actual decision of the Court.

The Board of Supervisors v. J. W. Kennicott, et al., 94 U. S. 499, 24 L. Ed. 260.
Story v. Livingston, 13 Pet. 359, 10 L. Ed. 200.

The case of Kosak v. United States, 54 F. (2d) 72, is not pertinent to the present situation. In that case, there was no mistake to correct. In the present case, a comparison of the Opinions of the Court of Appeals and the Opinion of this Court with the mandates clearly shows that a mistake was made by the Clerk and that correction is needed.

The cases of The Stephen Morgan v. Good, 94 U. S. 599, 24 L. Ed. 266, and Hubbard v. Tod, 171 U. S. 474,

494, 43 L. Ed. 246, 253, are not pertinent to this situation. The fact that respondents did not apply for writ of certiorari certainly has no bearing upon respondents' right to move for recall and correction of the mandates which fail to conform with what was actually decided as shown by the Opinions of the Court of Appeals and this Court.

The case of Conley v. United States, 59 F. (2d) 929, 936, does not bear upon the present situation. Whether or not the Court of Appeals had discretion in this matter is not at issue. The point is that the mandates do not conform to what was actually decided and the question of discretion or abuse of discretion can have no bearing upon this point.

CONCLUSION.

It is respectfully submitted that the motion to recall and correct the mandates should be granted.

Respectfully submitted,

EDWIN P. CORBETT,
LLOYD T. WILLIAMS,
EDWARD L. REED,
JOHN J. MAHONEY,
Counsel for Respondents.

WADE H. ELLIS,
CHALLEN B. ELLIS,
Of Counsel.

INDEX.

Status 1

The Motion to Recall and Correct the Mandates should be denied for the following reasons..... 3

(1) That although labelled a Motion to Recall and Correct the Mandates the name is a misnomer and in effect it is asking this Court for a rehearing of its decision of December 4, and is for the sole purpose of reconsideration of this decision and as such comes without the rule..... 3

(2) If the Motion can be correctly termed a Motion to Correct the Mandates the motion should be denied on the ground that the Respondents urged this Court to affirm the Circuit Court of Appeals 4

(3) That no mistake was made by the Court or Clerk which should be corrected..... 5

(4) Laches of the Respondent (moving party).... 5

(5) Parties who do not apply for certiorari can only be heard in support of the decree..... 6

Discretion of the Court..... 7

Cases relied upon by the Respondents..... 8

Conclusion 9

Authorities Cited.

Byers vs. Keystone, 4 Fed. Sup. 159 (D. C. Ohio)..... 7

Conley v. United States, 59 Fed. (2) 929, 936 (C. C. A. 8) 7

Francis vs. David A. Manville, 296 Fed. 349, 352 (C. C. A. 2) 8

Gantley v. Ewing, 3 How. 707, 717, 11 L. Ed. 794, 798 4

Hubbard v. Tod, 171 U. S. 474, 494, 43 L. Ed. 246, 253 6

Keystone v. General Excavator Company, 78 L. Ed. 202 (advance sheets) 2

Kosak vs. United States, 54 Fed. (2) 72..... 5

The Stephen Morgan v. Good, 94 U. S. 599, 24 L. Ed. 266 6

C. C. A. Decision at 62 Fed. (2) 48, and 64 Fed. (2) 39 2

Rule No. 33 of this Court..... 4

In the Supreme Court of the United States

OCTOBER TERM, 1933.

KEYSTONE DRILLER COMPANY, *Petitioner,* vs. GENERAL EXCAVATOR COMPANY, *Respondent.*	No. 34.
KEYSTONE DRILLER COMPANY, *Petitioner,* vs. GENERAL EXCAVATOR COMPANY, *Respondent.*	No. 35.
KEYSTONE DRILLER COMPANY, *Petitioner,* vs. THE OSGOOD COMPANY, *Respondent.*	No. 36.
KEYSTONE DRILLER COMPANY, *Petitioner,* vs. THE OSGOOD COMPANY, *Respondent.*	No. 37.

BRIEF IN OPPOSITION TO MOTION TO RECALL AND CORRECT MANDATES.

Status: The Motion and brief to recall and correct the mandates was received by registered mail February 23, 1934. Thereafter on February 27, 1934, a notice of hear-

ing on the Motion was received setting March 5th as the date of submitting the Motion to the Honorable Court.

The decision to which this Motion relates was handed down on December 4, 1933,* and which affirmed the decision of the Circuit Court of Appeals for the Sixth Circuit on a single question presented to this Court by the Petitioner from a decision dismissing the Bills of Complaint *without prejudice* on the ground that the Petitioner, Keystone Driller Company, came into Court with unclean hands.** The question presented to this Court was whether or not all of the patents in suit should come within the decree of the Sixth Circuit Court of Appeals where only one of the patents was sullied in the first instance.

On January 5, 1934, this Court issued mandates to the Honorable Judges of the District Court for the Northern District of Ohio in conformity with the decision of this Court. These mandates were endorsed by His Honor Judge Hahn and filed by the Clerk of the District Court of the Northern District of Ohio on January 9, 1934. The present motion to recall and correct the mandates was not filed until on or about February 23, 1934. In the meantime the Keystone Driller Company has on January 16, 1934, filed its bills in equity in the Northern District of Ohio in accordance with the mandate of this Court and the ruling of the Court of Appeals which this Court affirmed. Service was had on the Osgood and General Companies on January 19, 1934.

The motion requests this Court to change its decision affirming the Court of Appeals for the Sixth Circuit, to a decision enlarging the decision of the Appellate Court, and to give additional relief by dismissing the Bills *"with prejudice."*

---

* *Keystone v. General Excavator Company*, 78 L. Ed. 202 (advance sheets).

** C. C. A. Decision at 62 Fed. (2) 48, and 64 Fed. (2) 39.

The Motion to Recall and Correct the Mandates should be denied for the following reasons:

1. That although labelled a Motion to Recall and Correct the Mandates the name is a misnomer and in effect is asking this Court for a rehearing of its decision of December 4, and is for the sole purpose of reconsideration of this decision and as such comes without the rule.

2. If the Motion can be correctly termed a Motion to Correct the Mandate the motion should be denied on the ground that the Respondents urged this Court to affirm the Circuit Court of Appeals.

3. That no mistake was made by the Court or Clerk which should be corrected.

4. Laches of the Respondents (moving party).

5. Parties who do not apply for certiorari can only be heard in support of the decree.

(1) That although labelled a Motion to Recall and Correct the Mandates the name is a misnomer and in effect it is asking this Court for a rehearing of its decision of December 4, and is for the sole purpose of reconsideration of this decision and as such comes without the rule.

If this Court were to comply with the Motion it must, of necessity, do more than merely correct the mandates, and this we believe to be the purpose and function of a petition for rehearing.* The order was clear and plain "Decrees affirmed," and if there was any dissatisfaction to be found the Court's attention should have been called to that fact within the time for rehearing, namely twenty-

---

* Rule No. 33 of this Court provides that: "A petition for rehearing may be filed with the clerk * * * within twenty-five days after judgment is entered."

five days after the decision of December 4, 1933. The doctrine as stated in *Gantley v. Ewing*, 3 How. 707, 717, 11 L. Ed. 794, 798, applies here, and where this Court said:

> "as an act directly prohibited, could not be done indirectly."

The Respondents, having slept on their rights, if any they had, cannot now come into Court by a Motion to Correct the Mandate and attempt to do indirectly that which should have been done on or before December 29, 1933.

(2) If the Motion can be correctly termed a Motion to Correct the Mandates the motion should be denied on the ground that the Respondents urged this Court to affirm the Circuit Court of Appeals.

For the first time in the litigation before this Court, in the subject cases, the Respondents have expressed dissatisfaction with the decrees of the Circuit Court of Appeals by their Motion to correct the Mandates. We believe they are now estopped to change their position. In their main brief, page 50, before this Court on the hearing, their position at that time was clearly expressed as follows:

CONCLUSION

> "In view of the foregoing we submit that the decree of the Circuit Court of Appeals *should be affirmed.*
>
> Respectfully submitted,
>
> EDWIN P. CORBETT,
> LLOYD F. WILLIAMS,
> EDWARD L. REED,
> JOHN J. MAHONEY.
>
> WADE H. ELLIS,
> CHALLEN B. ELLIS,
> *Of Counsel.*"

In view of the foregoing statement of the Respondents urging the Court to enter the very order about which they now seek to have changed or corrected it should dispel any doubt in the minds of the Court that a mistake was made.

(3) That no mistake was made by the Court or Clerk which should be corrected.

The Motion to Correct the Mandates is moreover beyond the scope of such procedure. There must have been a mistake to correct as succinctly stated by the Circuit Court of Appeals for the Third Circuit in *Kosak vs. United States,* 54 Fed. (2) 72, where Judge Wooley, speaking for that Court, said at page 72:

> "We find no mistake in the simple entry of 'Judgment reversed' without a direction for a new trial occurring in the mandate in question. Hence *we cannot recall the mandate to correct a mistake which is not there,* nor, had we the power, are we inclined through amendment to make certain by express words what in law the words themselves imply." (Emphasis ours throughout except as otherwise indicated.)

The order of this Court "Decrees affirmed" is even more clear than the case of *Kosak vs. United States.* If it means anything, it means the decrees of the Circuit Court of Appeals which were being considered. It is a commonplace that courts speak through their decrees and if the Respondents had any doubt as to the meaning of the decrees, the question should have been presented to the Circuit Court of Appeals.

(4) Laches of the Respondent (moving party).

The Respondents had the right to apply to this Court for a Writ of Certiorari to that portion of the decision of the Circuit Court of Appeals which they believed to be adverse to them and by their failure to avail themselves of

that right they cannot come into this Court, long after the Court has rendered its decision and the mandate has issued thereon and by a motion to correct the mandate receive the relief they now seek. The failure and laches of the Respondents should not be placed on the shoulders of the Court, or the Clerk of the Court.

(5) Parties who do not apply for certiorari can only be heard in support of the decree.

It is a settled rule also that parties who do not appeal cannot be heard except in support of the decree. The rule is well stated in *The Stephen Morgan v. Good,* 94 U. S. 599, 24 L. Ed. 266, and where Mr. Justice Clifford said at page 599:

> "Parties who do not appeal from a final decree of a circuit court, which is regular in form, cannot be heard in opposition to the decree when the cause is removed here by the opposite party, unless it appears that the proceedings in removing the cause were unauthorized or irregular. They may be heard in support of the decree and in opposition to every assignment of error filed by the appellants. *The Wm. Bagaley,* 5 Wall. 377 (72 U. S. XVIII 583); *Harrison v. Nixon,* 9 Pet. 494; *Canter v. Ins. Co.,* 3 Pet. 318."

This rule has been applied to writs of certiorari as well as appeals where this Court in *Hubbard v. Tod,* 171 U. S. 474, 494, 43 L. Ed. 246, 253, the Court said:

> "And as respondents did not apply for certiorari, we shall confine our consideration of the case to the examination of errors assigned by petitioner."

The Respondents' position heretofore has not been inconsistent with this rule. They did not apply for certiorari. Their brief shows a desire to have the Appellate Court affirmed. This petitioner did not assign as error the decrees of the Appellate Court dismissing the bills with-

out prejudice. The belated motion to correct the mandates should not now enlarge the relief with which the Respondents were content when the cause was before this Court and the Circuit Court of Appeals.

Discretion of the Court: In contempt cases where one of the parties has been at fault the punishment to be imposed is within the sound discretion of the Court and will not be disturbed unless grossly excessive. *Conley v. United States*, 59 Fed. (2) 929, 936 (C. C. A. 8). In cases such as this where the bills of complaint have been dismissed without prejudice, the punishment or penalty imposed is the dismissal with the resulting loss where the patents are infringed. We do not believe that the decision of the Court of Appeals shows any abuse of discretion.

The facts surrounding the acts of the petitioner which resulted in the bills being dismissed without prejudice in the present cases have been presented to His Honor Judge Jones since that issue has become of prime importance. *Byers vs. Keystone*, 4 Fed. Sup. 159 (D. C. Ohio).

The statement made by this Court in the decision herein (78 L. Ed. 202, advance sheets) at page 205 where it is said:

> "Had the corruption of Clutter been disclosed at the trial of the *Byers* case, the Court would have been warranted in holding it sufficient to require dismissal of the cause of action there alleged for the infringement of the Downie patent."

The alleged suppression was disclosed fully for the first time in a rehearing before the Trial Court in the *Byers* case. The accusing witness Clutter was for the first time brought to court. After hearing fully the accused and the accusing witnesses, Judge Jones found that there had been no suppression and dismissed the proceedings. His opinion appears at 4 Fed. Sup. 160. On this subject he said (pp. 160 and 161):

"It is idle to suppose that Clutter did not know what he had signed and agreed to with respect to the Joplin use. If he did not, *he then was under no obligation of silence as far as he was concerned, and therefore under no suppressive influence.*"

(p. 162)

"Upon that phase of the case, however, I find that Downie endeavored to secure for his own protection whatever rights Clutter may have had to the improvement, for the purpose of avoiding any trouble in sustaining his patent, together with the denial of prior use by Clutter. I find that Downie did not successfully accomplish this purpose, that such arrangement as was entered into with Clutter was breached prior to trial of this case, *and that Clutter was under no suppressive influence or obligation at that time respecting his alleged invention or prior use.* I find there was no suppression of evidence materially affecting the defendant's rights." (Emphasis ours.)

He further held that the Joplin prior use about which all this controversy has raged was an abandoned experiment, did not anticipate and was not proved.

Cases relied upon by the Respondents: In the case of *Lake St. El. R. Co. vs. Ziegler,* 99 Fed. 114 on page 5 of Respondents' brief is not in point for as stated *both* parties appealed while here the Respondents did not apply to this Court for certiorari. The cases citing want of equity on pages 6 and 7 do not meet the situation here for each case must be determined on its own facts and is within the discretion of the chancellor as to the penalty to be imposed. (*Francis vs. David A. Manville,* 296 Fed. 349, 352 (C. C. A. 2).

The Respondents on page 8 of their brief now state that the mistake to which their motion relates originated in the decree of the Circuit Court of Appeals and still they failed to request that Court to reconsider its decision and,

still more, nothing was done in this Court which would indicate such a mistake had been made until February 23 when this motion was filed.

CONCLUSION.

It is respectfully submitted that the motion to recall and correct the mandates be denied.

Respectfully,

F. O. RICHEY,
WILLIAM H. BOYD,
H. F. MCNENNY,
Of Counsel for Petitioner.

CORRECTED COPY

SUPREME COURT OF THE UNITED STATES.

Nos. 34, 35, 36 and 37.—October Term, 1933.

Keystone Driller Company, Petitioner, 34 *vs.* General Excavator Company. Keystone Driller Company, Petitioner, 35 *vs.* General Excavator Company. Keystone Driller Company, Petitioner, 36 *vs.* The Osgood Company. Keystone Driller Company, Petitioner, 37 *vs.* The Osgood Company.	On Writs of Certiorari to the United States Circuit Court of Appeals for the Sixth Circuit.

[December 4, 1933.]

Mr. Justice Butler delivered the opinion of the Court.

The question presented is whether the Circuit Court of Appeals rightly applied the maxim, He who comes into equity must come with clean hands.

Petitioner owns five patents which may be conveniently identified as the Clutter patent and the four Downie patents.* They all cover devices constituting parts of a ditching machine operated on the principle of a mechanical hoe or mattock. The Clutter patent is basic and the Downie patents are for claimed improvements.

Prior to the commencement of these suits, the petitioner brought a suit in the Eastern Division of the Northern Ohio District against the Byers Machine Company for infringement of the first three

*They are Clutter Patent No. 1,317,431, issued September 30, 1919; Downie Patent No. 1,511,114, issued October 7, 1924; Downie Patent No. 1,543,250, issued June 23, 1925; Downie Patent No. 1,709,466, issued April 16, 1929; Downie Patent No. 1,716,432, issued June 11, 1929.

patents. January 31, 1929, the court held them valid and infringed and granted injunction. 4 F. Supp. 159. Defendant appealed.

February 9, 1929, petitioner brought these two suits in the Western Division of the same District, one against the General Excavator Company and the other against the Osgood Company. In each, plaintiff alleged infringement by defendant of the same three patents. Plaintiff immediately applied for temporary injunctions to restrain further infringement. The applications were based upon the complaints, supporting affidavits and the pleadings, opinion and decree in the *Byers* case. The court filed a memorandum in which it is stated that, while plaintiff had sustained its patents as against the defenses of an alleged impecunious infringer, defendants were in good faith pressing new defenses that seemed to have merit enough to prevent the application of the rule permitting a temporary injunction merely because of the prior adjudication. The court denied the injunctions but upon condition that defendants give bonds to pay the profits or damages that might be decreed against them. In August, 1929, plaintiff filed supplemental complaints alleging infringement of the other two patents. November 5, 1930, the Circuit Court of Appeals affirmed the decree in the *Byers* case. 44 F. (2d) 283. Then these cases were consolidated for trial. Plaintiff withdrew its claim that the Osgood Company infringed the last patent. The district court held the Clutter patent and the first and fourth Downie patents valid and infringed, the second Downie not infringed and the third Downie patent invalid.

At the trial of these cases, defendants introduced evidence that plaintiff did not come into court with clean hands. It was sufficient to sustain findings of fact made by both courts, in substance as follows: June 27, 1921, Downie filed the application on which was issued his first patent. In the preceding winter he had learned of a possible prior use at Joplin, Missouri, by Bernard R. Clutter. The latter is a brother of the patentee of the Clutter patent and had then recently been in the service of plaintiff as demonstrator in the use of ditching machinery. Downie made the application and assigned his rights to plaintiff of which he was secretary and general manager. The patent issued and plaintiff, contemplating the bringing of an infringement suit thereon against the Byers Machine Com-

pany, was advised that the prior use at Joplin was sufficient to cast doubt upon the validity of the patent. Downie then went to Bernard R. Clutter and for valuable considerations—which are described in the opinion of the Circuit Court of Appeals, 62 F. (2d) 48, and need not be detailed here—obtained from Clutter an affidavit prepared by Downie to the effect that Clutter's use of the device was an abandoned experiment and also obtained Clutter's agreement to assign plaintiff any rights he might have as inventor, to keep secret the details of the prior use and, so far as he was able, to suppress the evidence. No proof of such use was produced at the trial of that case. The defendants in these suits took Clutter's deposition early in 1930. He did not then disclose his arrangement with plaintiff for concealment of evidence in the *Byers* case. Their suspicions being aroused by his testimony, defendants in the latter part of that year again examined him and secured facts upon which they were able to compel the plaintiff to furnish the details of the corrupt transaction.

The district court characterized Downie's conduct as highly reprehensible and found that his purpose was to keep Clutter silent. But it also found that the plaintiff did nothing to suppress evidence in these cases. It expressed the opinion that matters pertaining to the motion for preliminary injunction had no bearing upon the merits, and that plaintiff's use of the Byers decree was not a fraud upon the court. And it ruled the maxim did not apply. The Circuit Court of Appeals held the contrary, reversed the decrees of the district court and remanded the cases with instructions to dismiss the complaints without prejudice. 62 F. (2d) 48. 64 F. (2d) 39.

Plaintiff contends that the maxim does not apply unless the wrongful conduct is directly connected with and material to the matter in litigation and that, where more than one cause is joined in a bill and plaintiff is shown to have come with unclean hands in respect of only one of them, the others will not be dismissed.

The meaning and proper application of the maxim are to be considered. As authoritatively expounded, the words and the reasons upon which it rests extend to the party seeking relief in equity. "It is one of the fundamental principles upon which equity jurisprudence is founded, that before a complainant can have a standing in court he must first show that not only has he a good

and meritorious cause of action, but he must come into court with clean hands. He must be frank and fair with the court, nothing about the case under consideration should be guarded, but everything that tends to a full and fair determination of the matters in controversy should be placed before the court". Story's Equity Jurisprudence, 14th ed., § 98. The governing principle is "that whenever a party who, as *actor,* seeks to set the judicial machinery in motion and obtain some remedy, has violated conscience, or good faith, or other equitable principle, in his prior conduct, then the doors of the court will be shut against him *in limine;* the court will refuse to interfere on his behalf, to acknowledge his right, or to award him any remedy." Pomeroy, Equity Jurisprudence, 4th ed., § 397. This court has declared: "It is a principle in chancery, that he who asks relief must have acted in good faith. The equitable powers of this court can never be exerted in behalf of one who has acted fraudulently or who by deceit or any unfair means has gained an advantage. To aid a party in such a case would make this court the abetter of iniquity". *Bein* v. *Heath,* 6 How. 228, 247. And again: "A court of equity acts only when and as conscience commands, and if the conduct of the plaintiff be offensive to the dictates of natural justice, then, whatever may be the rights he possesses and whatever use he may make of them in a court of law, he will be held remediless in a court of equity". *Deweese* v. *Reinhard,* 165 U. S. 386, 390.

But courts of equity do not make the quality of suitors the test. They apply the maxim requiring clean hands only where some unconscionable act of one coming for relief has immediate and necessary relation to the equity that he seeks in respect of the matter in litigation. They do not close their doors because of plaintiff's misconduct, whatever its character, that has no relation to anything involved in the suit but only for such violations of conscience as in some measure affect the equitable relations between the parties in respect of something brought before the court for adjudication. Story, *id.,* § 100. Pomeroy, *id.,* § 399. They apply the maxim, not by way of punishment for extraneous transgressions but upon considerations that make for the advancement of right and justice. They are not bound by formula or restrained by any limitation that tends to trammel the free and just exercise of discretion.

Neither the plaintiff's corruption of Clutter in respect of the first Downie patent nor its use in these cases of the Byers decree can fairly be deemed to be unconnected with causes of action based on the other patents.

Its bills show the devices covered by the five patents to be important, if not essential, parts of the same machine. And its claims warrant the inference that each supplements the others. This is made plain by mere reference to the things patented. The Clutter device is for the hoe or mattock arrangement. The first Downie is for an improvement designed, by a drop bottom scoop and other means, to permit more accurate dumping. The second Downie had for its main purpose the elimination of a "blind spot" in the unloading operation. The third Downie makes possible and convenient the use of scoops of different widths upon the same machine. The fourth Downie device consists of detachable rake teeth for a scoop.

Had the corruption of Clutter been disclosed at the trial of the *Byers* case, the court undoubtedly would have been warranted in holding it sufficient to require dismissal of the cause of action there alleged for the infringement of the Downie patent. Promptly after the decision in that case plaintiff brought these suits and immediately applied for injunctions *pendente lite*. It used the decree of validity there obtained in support, if not indeed as the basis, of its applications. And plaintiff's misconduct in the Byers suit remaining undisclosed, that decree was given weight on the motions for preliminary injunctions. *Leeds & Catlin* v. *Victor Talking Mach. Co.*, 213 U. S. 301, 312. 1 Walker on Patents (6th ed.), § 704, *et seq.* As the litigation was to continue for years and the use of the devices in question was essential to the ditching machinery, it is clear that the injunctions would have been a burdensome detriment to defendants. The amounts of the bonds required in lieu of injunctions attest the importance of the advantage obtained by use of the decree. While it is not found, as reasonably it may be inferred from the circumstances, that from the beginning it was plaintiff's intention through suppression of Clutter's evidence to obtain decree in the *Byers* case for use in subsequent infringement suits against these defendants and others, it does clearly appear that the plaintiff made the *Byers* case a part of his preparation in these

suits. The use actually made of that decree is sufficient to show that plaintiff did not come with clean hands in respect of any cause of action in these cases.

The relation between the device covered by the first Downie patent and those covered by the other patents, taken in connection with the use to which plaintiff put the Byers decree, is amply sufficient to bring these cases within the maxim. *Conard* v. ~~*Atlantic Insurance Co.*~~ *Nicoll*, 4 Pet. 291, 297. *Clarke* v. *White*, 12 Pet. 178, 193. *Carrington* v. *Pratt*, 18 How. 63, 67. *Kitchen* v. *Rayburn*, 19 Wall 254, 263.

Decrees affirmed.

A true copy.

Test:

Clerk, Supreme Court, U. S.